Planning and Zoning Board
Agenda
January 10, 2017

Chair Gary Thomas | **City Manager Traci L. Gresham**

Vice Chair Dayna Miller
Member Fred Hilton
Member Anthony Wright
Member Virginia Johns
School Board Member Rob Hyatt

Planning and Zoning Board
At 6:00 PM

Meeting Date: January 10, 2017

Meeting Location: James A. Lewis Commision Chambers

Notice given pursuant to Section 286.0105, Florida Statutes. In order to appeal any decision made at this meeting, you will need a verbatim record of the proceedings. It will be your responsibility to ensure such a record is made.

PLANNING AND ZONING BOARD MEETING AGENDA

CALL TO ORDER

INVOCATION

PLEDGE TO THE FLAG

APPROVAL OF THE AGENDA

I. OLD BUSINESS

II. NEW BUSINESS

A. Approval of the Minutes of the December 13, 2016 PZB Meeting

B. Site Plan: Holiday Inn, Alachua: A request by Sergio Reyes, P.E., of eda, inc., applicant and agent

for Hipp Investments, LLC, property owners for consideration of a Site Plan for he construction of a ±58,821 sf (92 room) hotel on a ±4.24 acre subject property. Tax Parcel Number 03053-001-001 (Quasi-Judicial Hearing).

III. BOARD COMMENTS/DISCUSSION

IV. CITIZENS COMMENTS

ADJOURN

City of ALACHUA
THE GOOD LIFE COMMUNITY

Board/Committee Agenda Item

MEETING DATE: 1/10/2017
SUBJECT: Approval of the Minutes of the December 13, 2016 PZB Meeting

PREPARED BY: Justin Tabor, AICP, Principal Planner

RECOMMENDED ACTION:
Approve the minutes of the December 13, 2016 Planning & Zoning Board (PZB) Meeting.

Summary

Approve the minutes of the December 13, 2016 Planning & Zoning Board (PZB) Meeting.

ATTACHMENTS:

Description

- PZB Minutes 12/13/16

Planning and Zoning Board
Minutes
December 13, 2016

Chair Gary Thomas
Vice Chair Dayna Miller
Member Fred Hilton
Member Anthony Wright
Member Virginia Johns
School Board Member Rob Hyatt

City Manager Traci L. Gresham

Planning and Zoning Board
At 6:30 PM
to address the item(s) below.

Meeting Date: December 13, 2016

Meeting Location: James A. Lewis Commission Chambers

Notice given pursuant to Section 286.0105, Florida Statutes. In order to appeal any decision made at this meeting, you will need a verbatim record of the proceedings. It will be your responsibility to ensure such a record is made.

PLANNING AND ZONING BOARD MEETING MINUTES

CALL TO ORDER

Chair Gary Thomas called the meeting to order. Members Dayna Miller and Anthony Wright were absent at the call to order. Member Anthony Wright arrived at approximately 6:40 P.M.

INVOCATION

Chair Gary Thomas led the Invocation.

PLEDGE TO THE FLAG

The Board led the Pledge of Allegiance.

APPROVAL OF THE AGENDA

There were no changes to the Agenda.

I. OLD BUSINESS

None.

II. NEW BUSINESS

A. Approval of the Minutes of the September 13, 2016 PZB Meeting

Member Virginia Johns motioned to accept the minutes; seconded by Member Fred Hilton. Passed by unanimous consent.

B. Site Plan: Foundation Park, Phase 2: A request by Randall S. Olney, P.E., of Causseaux, Hewett, & Walpole, Inc., applicant and agent for Alachua Foundation Park Holding Company, LLC, and the University of Florida Foundation, Inc., property owners, for consideration of a Site Plan for the construction of three (3) ±42,460 square foot buildings, consisting of a ±14.53 acre subject property. Tax Parcel Nos. 03191-010-001 and 03191-011-000 (Quasi-Judicial Hearing).

Assistant Deputy City Clerk Melanie Anne Westmoreland swore in all parties entering testimony during the hearing.

Principal Planner Justin Tabor, AICP, presented the Staff Report.

Randall Scott Olney, P.E., of Causseaux, Hewett, & Walpole, Inc., Applicant and Agent for the property owners, acknowledged the applicant's agreement to the conditions recommended by Staff and availed himself for questions.

Member Anthony Wright moved that based upon the competent substantial evidence presented at this hearing, the presentation before this Board, and Staff's recommendation, this Board finds the application to be consistent with the City of Alachua Comprehensive Plan and in compliance with the Land Development Regulations and approves the Site Plan, subject to the five (5) conditions provided in Exhibit "A" and located on page 21 of the December 13, 2016, Staff Report to the Planning & Zoning Board; seconded by Member Virginia Johns. Motion Passed 4-0 on a roll call vote.

III. BOARD COMMENTS/DISCUSSION

Planning Director Kathy Winburn, AICP, stated that a Planning & Zoning Board Meeting may be scheduled for January, and that the Board will receive further updates should the meeting be scheduled.

Planning Director Kathy Winburn, AICP, advised the Board that City Commission Meetings will begin at 6:00 PM, beginning with the Commission's first meeting in January. Ms. Winburn requested the Board consider if it would like to change the Board's meeting times from 6:30 PM to 6:00 PM.

The Board discussed the proposal presented by Ms. Winburn.

Member Fred Hilton moved that the Board change its meeting start times from 6:30 PM to 6:00 PM; seconded by Member Virginia Johns. Motion Passed 4-0 on a roll call vote.

IV. CITIZENS COMMENTS

None.

ADJOURN

ATTEST:

PLANNING AND ZONING BOARD OF THE CITY OF ALACHUA, FLORIDA

_____
Presiding Officer

_____
Staff Liaison

City of ALACHUA
THE GOOD LIFE COMMUNITY

Board/Committee Agenda Item

MEETING DATE: 1/10/2017
SUBJECT: Site Plan: Holiday Inn, Alachua: A request by Sergio Reyes, P.E., of eda, inc., applicant and agent for Hipp Investments, LLC, property owners for consideration of a Site Plan for he construction of a ±58,821 sf (92 room) hotel on a ±4.24 acre subject property. Tax Parcel Number 03053-001-001 (Quasi-Judicial Hearing).

PREPARED BY: Adam Hall, AICP, Planner

RECOMMENDED ACTION:
Staff recommends that the Planning & Zoning Board approve the Site Plan, subject to the six (6) conditions provided in Exhibit "A" of the January 10, 2016, Staff Report to the Planning & Zoning Board, upon making the following motion:

Based upon the competent substantial evidence presented at this hearing, the presentation before this Board, and Staff's recommendation, this Board finds the application to be consistent with the City of Alachua Comprehensive Plan and in compliance with the Land Development Regulations and approves the Site Plan, subject to the six (6) conditions provided in Exhibit "A" and located on page 22 of the January 10, 2017, Staff Report to the Planning & Zoning Board.

Summary

The proposed site plan is a request by Sergio Reyes, P.E. of eda engineers-surveyors-planners, inc., applicant and agent for Hipp Investments, LLC, property owner, for the construction of a 58,821 sf (92 room) hotel with employee and visitor parking, storm water management facility improvements, paving, grading, and associated utility infrastructure

The subject property is ±4.24 acres in area and is located at 16367 NW 167th Boulevard ; north of NW US Highway 441, south of the Heritage Oaks Subdivision, east of the Alachua Market Place Plaza. Access to the subject property would be provided primarily by one (1) ingress/egress drive connecting to NW 167th Boulevard.

The proposed development will convey the development's stormwater runoff to one (1) proposed stormwater basin located to the south of the structure and parking lot on the subject property. The applicant submitted an Environmental Resource Permit (ERP) application to the Suwannee River Water Management District (SRWMD) for the proposed stormwater basin and improvements, which was submitted on November 1, 2016 (Permit No. ERP-001-228538-2).

Section 6.6.3 of the City's Land Development Regulations (LDRs) establishes additional conditions that may be imposed for development located within 500 feet of any residential district or adjacent to any existing single-family or two-family development. Upon evaluation of the proposed Site Plan, Staff imposed the following conditions:

1. In addition to all other landscaping requirements, an additional row of understory trees are to be planted along the rear property line to complete the visual and aural buffer between the proposed development and the existing single- family residential uses located to the north.
2. All canopy trees proposed to serve as a perimeter buffer on the rear property line shall be of a species that achieves an average height of at least fifty feet at maturity.
3. The pool area shall be closed from 10 PM to dawn on weeknights and from 11 PM to dawn on weekend nights.

ATTACHMENTS:

Description

- Staff Report
- Exhibit B to Staff Report: Supporting Application Materials
- Application & Supporting Materials
- Site Plan
- Public Notice Materials

City of Alachua
Planning & Community Development Department
Staff Report

Planning & Zoning Board Hearing Date: January 10, 2017
Quasi-Judicial Hearing

SUBJECT:	A request for a Site Plan for the construction of a ±58,821 sf (92 room) hotel with employee and visitor parking, storm water management facility improvements, paving, grading, and associated utility infrastructure
APPLICANT/AGENT:	Sergio Reyes, P.E., eda engineers-surveyors-planners, inc.
PROPERTY OWNER:	Hipp Investments, LLC
LOCATION:	16367 NW 167th Boulevard ; north of NW US Highway 441, south of the Heritage Oaks Subdivision, east of the Alachua Market Place Plaza
PARCEL ID NUMBER:	03053-001-001
FLUM DESIGNATION:	Commercial
ZONING:	Commercial Intensive ("CI")
OVERLAY:	N/A
ACREAGE:	±4.24 acres
PROJECT PLANNER:	Adam Hall, AICP
RECOMMENDATION:	Staff recommends that the Planning & Zoning Board approve the Site Plan, subject to the 6 (six) conditions provided in Exhibit "A" of this Staff Report.
RECOMMENDED MOTION:	*Based upon the competent substantial evidence presented at this hearing, the presentation before this Board, and Staff's recommendation, this Board finds the application to be consistent with the City of Alachua Comprehensive Plan and in compliance with the Land Development Regulations and approves the Site Plan, subject to the 6 (six) conditions provided in Exhibit "A" of the January 10, 2017 Staff Report to the Planning & Zoning Board.*

SUMMARY

The proposed site plan is a request by Sergio Reyes, P.E. of eda engineers-surveyors-planners, inc., applicant and agent for Hipp Investments, LLC, property owner, for the construction of a 58,821 sf (92 room) hotel with employee and visitor parking, storm water management facility improvements, paving, grading, and associated utility infrastructure

The subject property is ±4.24 acres in area and is located at 16367 NW 167th Boulevard; north of NW US Highway 441, south of the Heritage Oaks Subdivision, and east of the Alachua Market Place Plaza. Access to the subject property would be provided primarily by one (1) ingress/egress drive connecting to NW 167th Boulevard.

Map 1. Subject Property with Zoning

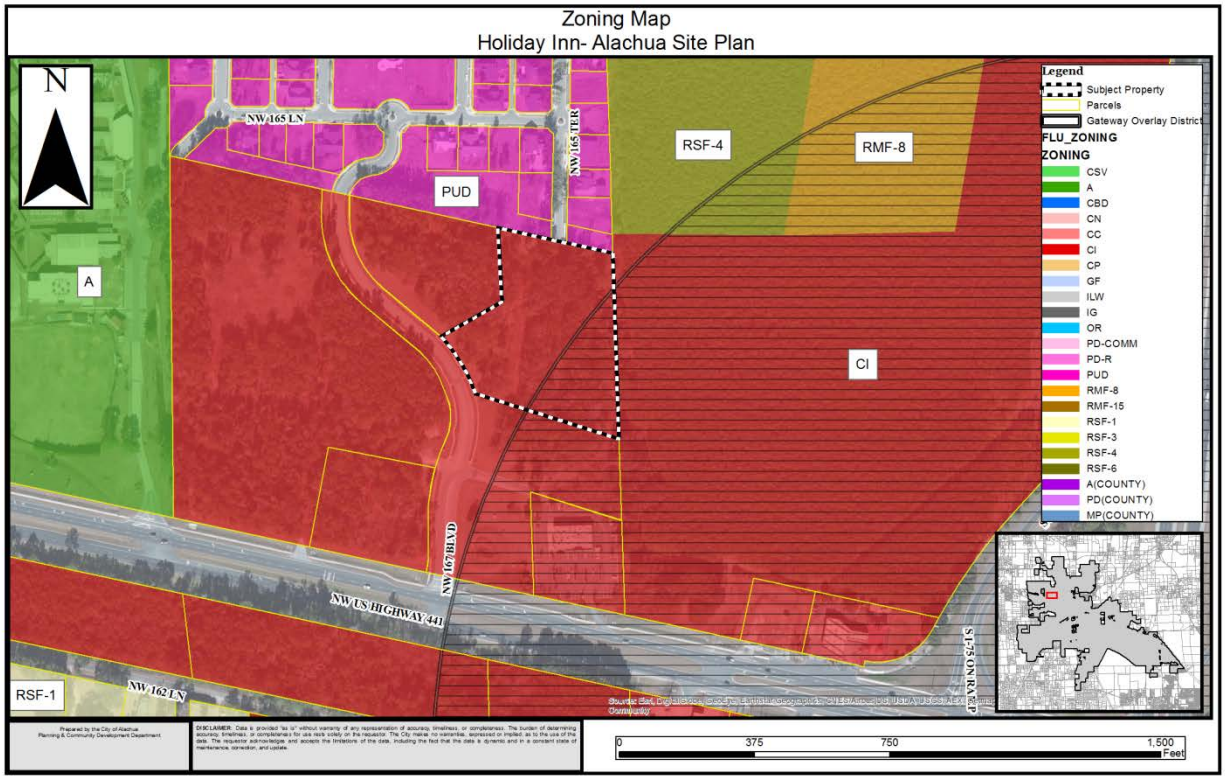

Map 2. Subject Property with Future Land Use

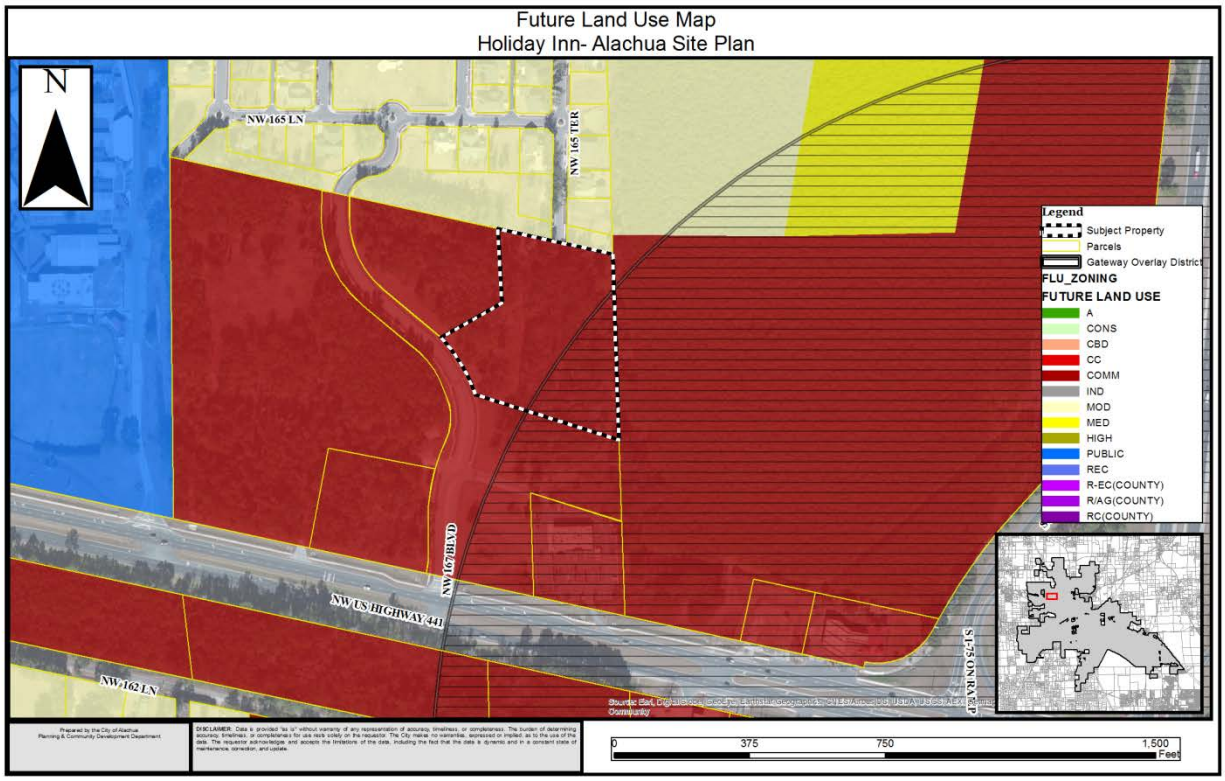

The proposed development will convey the development's stormwater runoff to one (1) proposed stormwater basin located to the south of the structure and parking lot on the subject property. The applicant submitted an Environmental Resource Permit (ERP) application to the Suwannee River Water Management District (SRWMD) for the proposed stormwater basin and improvements, which was submitted on November 1, 2016 (Permit No. ERP-001-228538-2).

SURROUNDING USES

The existing uses, Future Land Use Map (FLUM) Designations, and zoning districts of the surrounding area are identified in Table 1. Map 3 provides an overview of the vicinity of the subject property. (NOTE: The information below is intended to provide a general overview of the area surrounding the subject property and to generally orient the reader. It is not intended to be all-inclusive, and may not identify all existing uses, FLUM Designations, and/or zoning districts surrounding the subject property.)

Table 1. Surrounding Land Uses

Direction	Existing Use(s)	FLUM Designation(s)	Zoning District(s)
North	Single Family Residential	Moderate Density Residential	PUD
South	Vacant	Commercial	CI
East	Vacant	Commercial	CI
West	Commercial (Alachua Market Place Plaza and Emerick Pediatric Clinic (approved Site Plan)	Commercial	CI

Map 2. Vicinity Map

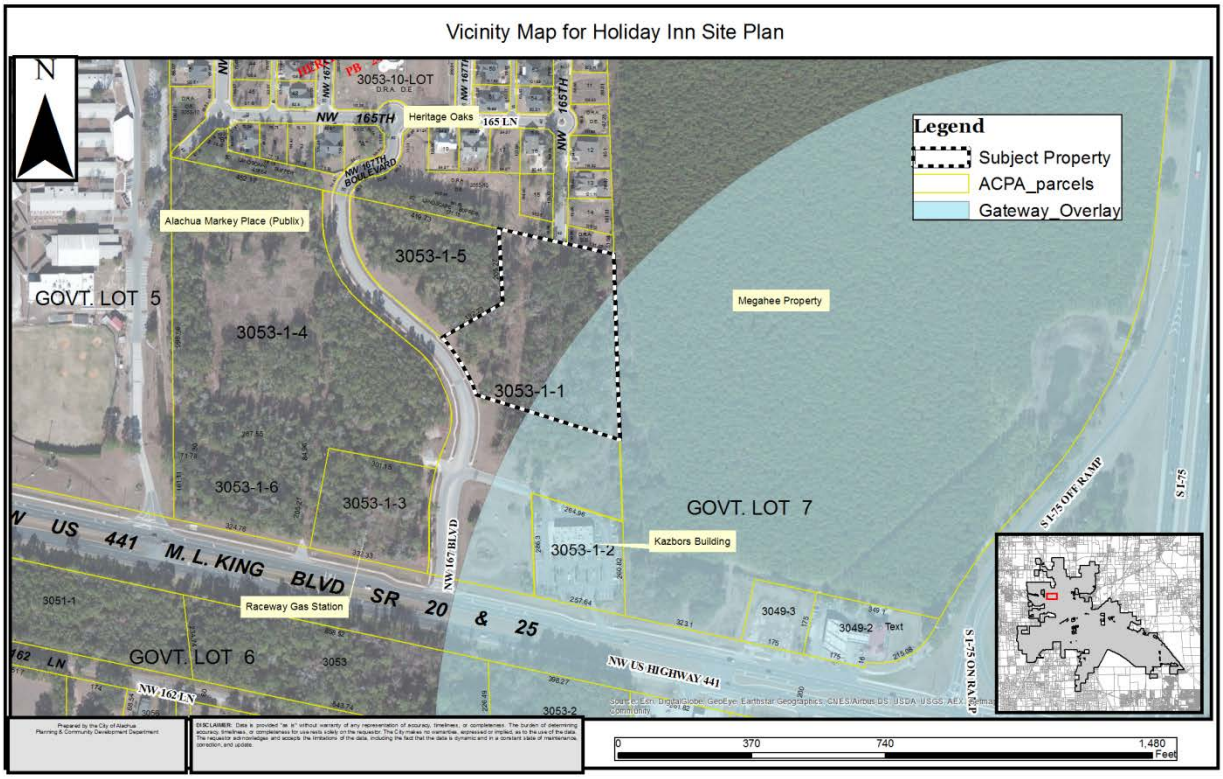

NEIGHBORHOOD MEETING

The purpose of a Neighborhood Meeting is to educate the owners of nearby land and any other interested members of the public about the project and to receive comments regarding the project. As required by Section 2.2.4 of the LDRs, all property owners within 400 feet of the subject property were notified of the meeting and notice of the meeting was published in a newspaper of general circulation.

A Neighborhood Meeting was held on September 20, 2016 at the Alachua Branch Library-Meeting Room A. The applicant's agent was present and available to answer questions. As evidenced by materials submitted by the applicant, the meeting was attended by fourteen (14) members of the public. A summary of the discussion which occurred at the

Neighborhood Meeting has been provided by the applicant and is included within the application materials.

CONSISTENCY WITH THE COMPREHENSIVE PLAN

The Goals, Objectives, and Policies (GOPs) identified below are provided to establish a basis of the application's consistency with the Comprehensive Plan. There may be additional GOPs which the application is consistent with that are not identified within this report. An evaluation and findings of consistency with the identified GOPs is also provided below.

Future Land Use Element

GOAL 1: Future Land Use Map 2025:

The City of Alachua shall maintain a Future Land Use Map in order to effectively guide development in a sustainable manner and to ensure economic prosperity and stability while maintaining a high quality of life for all of its present and future citizens.

Objective 1.3: Commercial

The City of Alachua shall establish three commercial districts: Community Commercial, Commercial and Central Business District. These districts shall provide a broad range of retail sales and services, as well as office uses, in order to provide for the availability of goods and services, both to the citizens of Alachua and to the citizens of the North Central Florida region.

Evaluation and Findings of Consistency with Objective 1.3: The proposed use (hotel) complies with the intent of the Commercial Future Land Use designation by providing a service/office use to the citizens of Alachua and to the citizens of the North Central Florida region.

Policy 1.3.b: Commercial: The Commercial land use category is established to provide for general commercial uses, as well as more intense commercial and highway commercial uses. This is the land use category in which large-scale, regional commercial uses may locate. The following uses are allowed within the Commercial land use category:

1. Retail sales and services;
2. Personal services;
3. Financial Institutions;
4. Outdoor recreation and entertainment;
5. Tourist-related uses;
6. Hotels, motels;
7. Commercial shopping centers;
8. Auto-oriented uses;
9. Traditional Mixed-use Neighborhood Planned Developments;
10. Employment Center Planned Developments;

11. Commercial recreation centers;
12. Office/business parks;
13. Limited industrial services;
14. Eating Establishments

Evaluation and Findings of Consistency with Policy 1.3.b: The subject property has a Commercial FLUM designation, which allows hotels and motels.

Policy 1.3.d: Design and performance standards: The following criteria shall apply when evaluating commercial development proposals:

1. Integration of vehicular and non-vehicular access into the site and access management features of site in terms of driveway cuts and cross access between adjacent sites, including use of frontage roads and/or shared access;
2. Buffering from adjacent existing/potential uses;
3. Open space provisions and balance of proportion between gross floor area and site size;
4. Adequacy of pervious surface area in terms of drainage requirements;
5. Placement of signage;
6. Adequacy of site lighting and potential impacts of lighting upon the surrounding area. Lighting should be designed to minimize impacts and preserve the ambiance and quality of the nighttime sky by reducing light trespass and light pollution on adjacent properties by utilizing lighting at an appropriate intensity, direction and times to ensure light is not overused or impacting areas where it is not intended;
7. Safety of on-site circulation patterns (patron, employee and delivery vehicles), including parking layout and drive aisles, and points of conflict;
8. Landscaping, as it relates to the requirements of the Comprehensive Plan and Land Development Regulations;
9. Unique features and resources which may constrain site development, such as soils, existing vegetation and historic significance; and
10. Performance based zoning requirements, which may serve as a substitute for or accompany land development regulations in attaining acceptable site design.
11. Commercial uses shall be limited to an intensity of less than or equal to .50 floor area ratio for parcels 10 acres or greater, .50 floor area ratio for parcels less than 10 acres but 5 acres or greater, a .75 floor area ratio for parcels less than 5 acres but greater than 1 acre, and 1.0 floor area ratio to parcels 1 acre or less.

Evaluation and Findings of Consistency with Policy 1.3.d: The applicant has demonstrated through their submitted site plan application and supporting documentation that each of these sub-policies has been addressed.

Policy 1.3.e: The creation/promotion of strip pattern commercial development shall be discouraged. Infill within established commercial areas is preferred over extension of a strip commercial pattern. Extension of a commercial land use designation may be considered in circumstances where the proposed commercial

parcel is located within a block in which at least fifty percent (50%) of the block face (in linear feet) is either currently developed with commercial land uses or is designated for commercial use. In either case, the proposed commercial land use extension shall not encroach into a residential area. Judging the suitability of a location for an extension of commercial land uses shall be based upon the following minimum criteria:

1. Impacts upon traffic circulation should be anticipated and mitigated through the reservation of right-of-way for road widening and marginal access streets. Access points for commercial complexes shall seek to minimize points of conflict by utilizing frontage roads, providing cross access between parcels or installing shared use curb cuts for access driveways to the maximum extent feasible
2. Setbacks and landscaped or other appropriate buffers shall be established to mitigate the visual impacts of commercial development.
3. A sidewalk or bicycle path shall be required where appropriate, to provide convenient access to surrounding residents and to reduce traffic volumes on the roadways.

Evaluation and Findings of Consistency with Policy 1.3.e: The subject property has a Commercial FLUM designation; no new commercial FLUM designations would created through consideration of this site plan application.

Objective 5.1: Natural features: The City shall coordinate Future Land Use designations with appropriate topography, soils, areas of seasonal flooding, wetlands and habitat during review of proposed amendments to the Future Land Use Map and the development review process. Natural features may be included as amenities within a development project.

Policy 5.1.a: Topography: The City shall protect the natural topography of the City, including steep and seepage slopes, by requiring new development to include techniques to minimize negative impacts on the natural terrain. An emphasis will be placed on retaining the natural function of seepage slopes during development. Additionally, retention of existing native vegetation will be encouraged as one method of protecting slopes.

Policy 5.1.b: Soils: The City shall ensure soil protection and intervention measures are included in the development review process.

Policy 5.1.c: Flood prone areas: The City shall require as part of the development review process the identification of FEMA flood zone areas. Where necessary, base flood elevations and minimum finished floor elevations shall be established. The City shall also require finished floor elevations on subdivision plats, site plans and building permit plans when necessary to determine compliance with flood prone area

regulations. The City shall establish standards for a limitation on filling in flood prone areas.

Policy 5.1.d: Wetlands: The City shall utilize statewide wetland delineation methodology in accordance with Florida Administrative Code (FAC) and regulations adopted by the FDEP and the Suwannee River Water Management District.

Policy 5.1.e: Habitat: The City shall require as part of the development review process, an inventory of listed species for all new developments in areas identified as known habitat for listed species if listed species are known to exist in close proximity to the development. The survey shall include detailed information regarding type, quantity, location, and habitat requirements for any listed species identified. A de minimus threshold for properties required to complete the inventory shall be established in the City's Land Development Regulations.

Evaluation and Findings of Consistency with Objective 5.1: According to the analysis of the subject property, based on the best available data, the site does not contain any environmental features, such as those considered by Objective 5.1 that would render the property inappropriate for the proposed development. Please see the Environmental Conditions Analysis section of this Report.

Objective 5.2: Availability of facilities and services: The City shall utilize a concurrency management system to ensure that the adopted level of service standards are maintained.

Policy 5.2.a: All new development shall meet level of service requirements for roadways, potable water and sanitary sewer, stormwater, solid waste, public schools, and improved recreation in accordance with LOS standards adopted in the elements addressing these facilities.

Evaluation and Findings of Consistency with Objective 5.2 and Policy 5.2.a: An analysis of the development's impact to public facilities has been provided within this report. This analysis demonstrates that the development will not adversely affect the level of service (LOS) standard of any monitored public facilities.

Policy 9.1: Any new development within a Commercial or Industrial Future Land Use Map Designation within the corporate limits, where potable water and wastewater service are available, as defined in Policy 1.2.a and Policy 4.2.a of the Community Facilities and Natural Groundwater Aquifer Recharge Element of the City of Alachua Comprehensive Plan, shall connect to the City of Alachua's potable water and wastewater system.

Evaluation and Findings of Consistency with Policy 9.1: The proposed development will connect to potable water and wastewater facilities.

Transportation Element

Objective 1.1: Level of Service

The City shall establish a safe, convenient and efficient level of service standard for all motorized and non-motorized transportation systems.

Evaluation and Findings of Consistency with Objective 1.1: An analysis of the development's impacts to transportation facilities has been provided within this report. The development will not adversely affect the level of service for transportation facilities.

Policy 1.3.a: The City shall establish minimum and maximum parking standards in order to avoid excessive amounts of underutilized parking areas.

Policy 1.3.d: The City shall require landscaping within parking areas, with an emphasis on canopy trees. The City shall consider establishing incentives for landscaping in excess of minimum standards.

Policy 1.3.e: The City shall establish standards for parking facility design that adequately separates pedestrians from vehicular traffic and delineates pedestrian crossing zones.

Policy 1.3.f: The City shall establish bicycle parking facility standards based on type of use within developments.

Policy 1.3.g: The City shall require spaces to accommodate persons with physical disabilities as required by the Americans with Disabilities Act.

Evaluation and Findings of Consistency with Objective 1.1 and Policies 1.3.a, 1.3.d – 1.3.g: The site plan complies with Section 6.1, Off-street parking and loading standards, of the City's Land Development Regulations.

Community Facilities & Natural Groundwater Aquifer Recharge Element

Policy 1.1.d:

The City hereby establishes the following level of service standards for sanitary sewer facilities:

Levels of Service

a. Quality: Compliance with all applicable standards of the U.S. Environmental Protection Agency (EPA) and the Florida Department of Environmental Protection (FDEP).
b. Quantity: System-wide wastewater collection and treatment will be sufficient to provide a minimum of 250 gallons per day per equivalent residential unit (ERU) on an average annual basis. Plant expansion shall be planned in accordance with F.A.C. 62-600.405, or subsequent provision.

This level of service standard shall be re-evaluated one year from the adoption date for the amended Plan.

c. System capacity: If the volume of existing use in addition to the volume of the committed use of the City's wastewater facility reaches 85% of the permitted capacity design, no further development orders for projects without reserved capacity will be issued until additional capacity becomes available or funds to increase facility capacity are committed in accordance with a development agreement.

Evaluation and Findings of Consistency with Policy 1.1.d: An analysis of the development's impacts to sanitary sewer facilities has been has been provided within this report. The development will not adversely affect the level of service for sanitary sewer facilities.

Policy 1.2.a: The City shall establish a Community Wastewater Service Area, which includes all areas where wastewater service is available. Wastewater service shall be deemed available if:

3. A gravity wastewater system, wastewater pumping station, or force main exists within ¼ mile of the property line of any residential subdivision with more than 5 units, or any multi-family residential development, or any commercial development, or any industrial development and the gravity wastewater system, wastewater pumping station, or force main can be accessed through public utility easements or right of ways. The distance shall be measured as required for construction of the infrastructure along public utility easements and right of ways.

Evaluation and Findings of Consistency with Policy 1.2.a: The proposed development is located within the City's utility service area and will connect to the City's wastewater system.

Policy 2.1.a: The City hereby establishes the following level of service standards for solid waste disposal facilities:

FACILITY TYPE	LEVEL OF SERVICE STANDARD
Solid Waste Landfill	.73 tons per capita per year

Evaluation and Findings of Consistency with Objective 2.1.a: An analysis of the development's impacts to solid waste facilities has been has been provided within this report. The development will not adversely affect the level of service for solid waste facilities.

Objective 3.1: Ensure provision of drainage and stormwater retention through level of service standards and design requirements to minimize flooding and to protect and improve water quality.

Policy 3.1.f: The City shall permit the use of off-site retention facilities, if they are part of previously approved master stormwater retention or detention facility.

Evaluation and Findings of Consistency with Objective 3.1 and Policy 3.1.f: The proposed development will convey the development's stormwater runoff to one (1) stormwater basin, which would located both on and off site of the subject property. The applicant submitted an self certified application to the Suwannee River Water Management District (SRWMD) for an Environmental Resource Permit (ERP) for the proposed stormwater basin and improvements , which was issued on April 11, 2016 (File No. 0343144001EG).

Policy 4.1.b: The City shall establish a Community Potable Water Service Area, which includes all areas where potable water service is available. Water service shall be deemed available if:

3. A water main exists within ¼ mile of any residential subdivision with more than 5 units, or any multi-family residential development, or any commercial development, or any industrial development and water service can be accessed through public utility easements or right of ways. The distance shall be measured as required for construction of the infrastructure along public utility easements and right of ways.

Evaluation and Findings of Consistency with Policy 4.1.b: The proposed development is located within the City's utility service area and will connect to the City's potable water system.

Policy 4.1.c: The City establishes the following level of service standards for potable water:

1. Quality: Compliance with all applicable standards of the U.S. Environmental Protection Agency (EPA) and the Florida Department of Environmental Protection.
2. Quantity: System-wide potable water distribution and treatment will be sufficient to provide a minimum of 275 gallons per day per equivalent residential unit (ERU) on an average annual basis. Plant expansion shall be planned in accordance with Florida Administrative Code.
3. System Capacity: If the volume of existing use in addition to the volume of the committed use of the City's potable water facility reaches 85% of the permitted design capacity, no further development orders or permits for projects without reserved capacity will be issued until additional capacity becomes available or funds to increase facility capacity are committed in accordance with a development agreement.

Evaluation and Findings of Consistency with Objective 4.1.c: An analysis of the development's impacts to potable water facilities has been has been provided within this report. The development will not adversely affect the level of service for potable water facilities.

Conservation & Open Space Element

Policy 1.2.a:

The City shall ensure that land use designations, development practices and regulations protect native communities and ecosystems, and environmentally sensitive lands.

Policy 1.3.e:

The City's land use designations shall offer the best possible protection to threatened and endangered species.

Evaluation and Findings of Consistency with Policy 1.2.a and 1.3.e: The subject property does not contain any environmentally sensitive lands or lands designated for conservation. The development therefore will encourage development practices which provide for the protection of native communities and ecosystems.

ENVIRONMENTAL CONDITIONS ANALYSIS

Wetlands

According to best available data, there are no wetlands located on the subject property. If any wetlands are identified on the subject property at a later time, these areas will be subject to the applicable protection standards of the City of Alachua Comprehensive Plan and the Land Development Regulations (LDRs.)

Evaluation: No wetlands have been identified on subject property therefore, there are no issues related to wetland protection.

Strategic Ecosystems

Strategic Ecosystems were identified by an ecological inventory project in a report prepared for Alachua County Department of Growth Management in 1987. The purpose of the inventory was to identify, inventory, map, describe, and evaluate the most significant natural biological communities in private ownership in Alachua County. The subject property is not located within or adjacent to a Strategic Ecosystem.

Evaluation: The subject property is not located within or adjacent to a Strategic Ecosystem, therefore, the development will not adversely impact any Strategic Ecosystem(s) identified within the ecological inventory report.

Map 4. Environmental Features

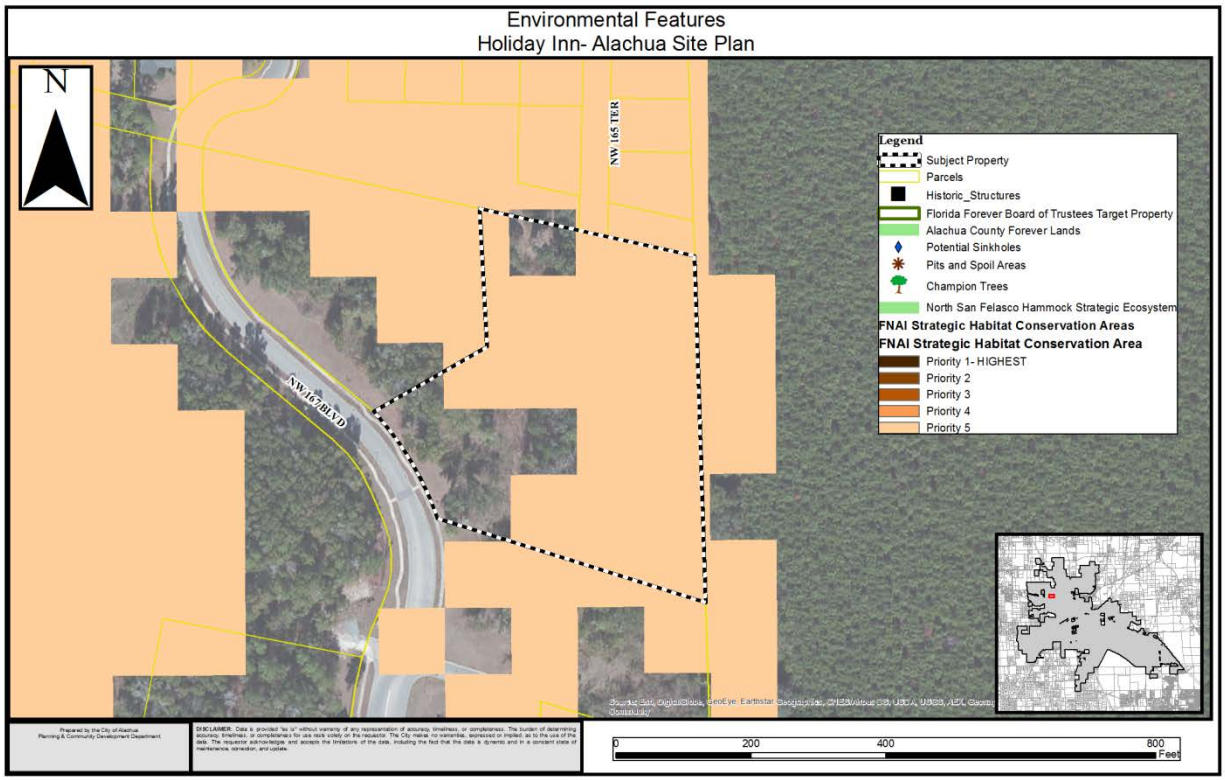

Map 5. Wetlands and Flood Zones

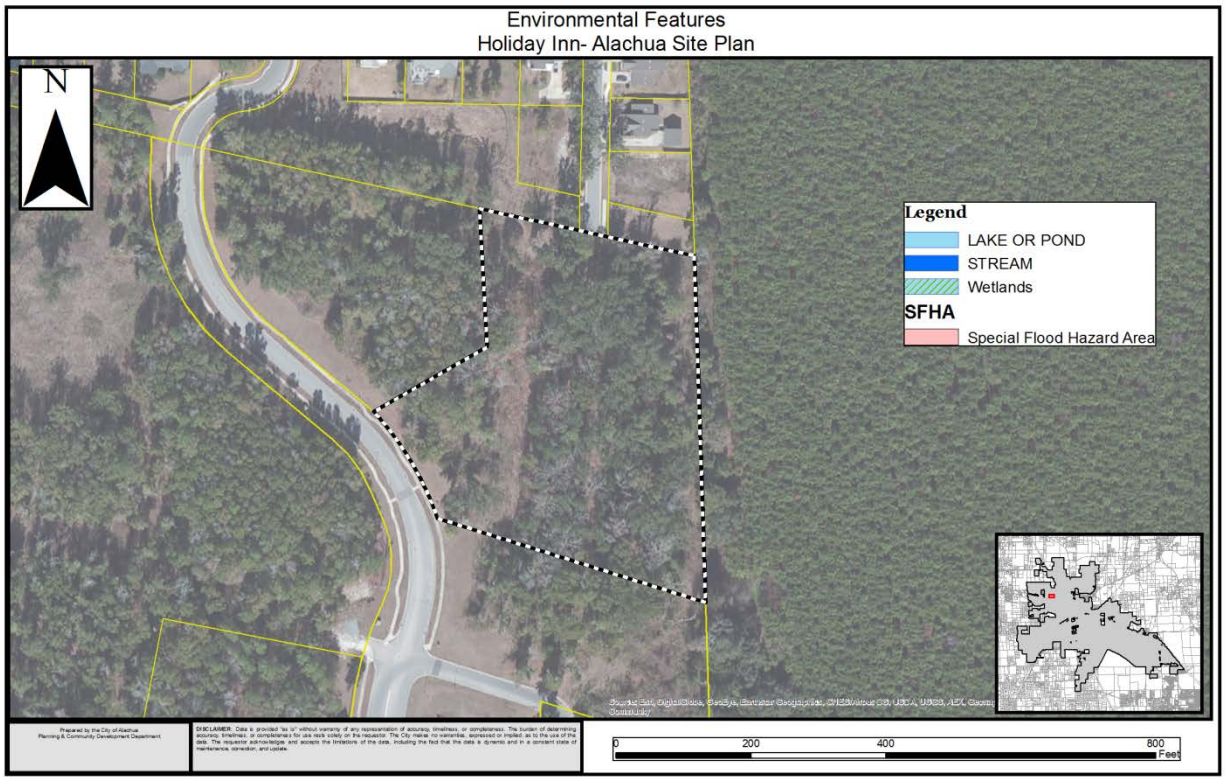

Regulated Plant & Animal Species

The subject property is not known to contain any species identified as endangered, threatened, or of special concern. The Florida Natural Areas Inventory (FNAI) has identified areas throughout the State of Florida which may contain good quality natural communities. This data layer is known as the Potential Natural Areas (PNA) data layer, and identifies privately owned lands that are not managed or listed for conservation purposes. These areas were delineated by FNAI scientific staff through interpretation of natural vegetation from 1988-1993 FDOT aerial photographs and from input received during Regional Ecological Workshops held for each regional planning council. These workshops were attended by experts familiar with natural areas in the region. Potential Natural Areas were assigned ranks of Priority 1 through Priority 5 based on size, perceived quality, and type of natural community present. The areas included in Priority 5 are exceptions to the above criteria. These areas were identified through the same process of aerial photographic interpretation and regional workshops as the PNA 1 through 4 ranked sites, but do not meet the standard criteria.

Evaluation: No species identified as endangered, threatened, or of special concern are known to exist on the subject property. While the FNAI PNA data layer does not indicate any lands classified as potentially having habitat which could support species identified as endangered, threatened, or of special concern, this data is not intended for use in a regulatory decision making process. If a regulated plant or animal species is identified during development, the applicant must adhere to the applicable standards in the City of Alachua Comprehensive Plan and the Land Development Regulations.

Soil Survey

Each soil type found on the subject property is identified below. The hydrologic soil group is an indicator of potential soil limitations. The hydrologic soil group, as defined for each specific soil, refers to a group of soils which have been categorized according to their runoff-producing characteristics. These hydrologic groups are defined by the Soil Survey of Alachua County, Florida, dated August 1985. The chief consideration with respect to runoff potential is the capacity of each soil to permit infiltration (the slope and kind of plant cover are not considered, but are separate factors in predicting runoff.) There are four hydrologic groups: A, B, C, and D. "Group A" soils have a higher infiltration rate when thoroughly wet and therefore have a lower runoff potential. "Group D" soils have very lower infiltration rates and therefore a higher runoff potential.

There are two (2) soil types found on the subject property:

Kendrick Sand (5%-8% slopes)
Hydrologic Soil Group: B

This soil type is well drained and permeability is rapid in the surface and moderately slow in subsurface layers. Surface runoff is medium. This soil type poses only slight limitations as sites for dwellings, absorption fields for septic tanks, and local roads and streets. Limitations as sites for small commercial buildings are moderate because of the slope.

Bivans Sand (5%-8% slopes)
Hydrologic Soil Group: C/D

This soil type is poorly drained and permeability is moderate to moderately rapid in the surface and subsurface layers. It is slow to very slow in subsoil. Surface runoff is rapid. This soil type poses severe limitations for most urban uses including sites for dwellings, small commercial buildings, absorption fields for septic tanks and local roads and streets.

Evaluation: The soil types where structures or paved areas will occur on the subject property potentially pose limitations for development. The proposed development will address soil limitations through undercutting and removing unsuitable soils and replacing with crushed limerock and other suitable materials. The applicant has addressed soil limitations in the Drainage Design Notes submitted as a part of the Site Plan application.

Flood Potential

Panel 0120D of the Federal Emergency Management Agency (FEMA) Flood Insurance Rate Map (FIRM) Series, dated June 16, 2006, indicates that the subject property is in Flood Zone X (areas determined to be outside of the 500-year floodplain.) See Map 5 above.

Evaluation: The subject property is located in Flood Zone X (areas determined to be outside of the 500-year floodplain), therefore there are no issues related to flood potential.

Karst-Sensitive Features

Karst sensitive areas include geologic features, such as fissures, sinkholes, underground streams, and caverns, and are generally the result of irregular limestone formations. The subject property is located within an area where sinkholes may potentially allow hydrologic access to the Floridan Aquifer System, however, best available data indicates that no sinkholes or known indicators of sinkhole activity are located on the subject property.

Evaluation: There are no geologic features located on the subject property which indicate an increased potential for karst sensitivity.

Wellfield Protection Zones

Policy 7.2.1 of the Future Land Use Element of the City's Comprehensive Plan establishes a 500 foot radius area around each city-owned potable water well.

Evaluation: The subject property is not located within a City of Alachua wellhead protection zone as identified on the City of Alachua Wellfield Primary Protection Zones Map of the City's Comprehensive Plan, therefore, there are no issues related to wellfield protection.

Historic Structures/Markers and Historic Features

The subject property does not contain any historic structures as determined by the State of Florida and the Alachua County Historic Resources Inventory. Additionally, the subject property is not located within the City's Historic Overlay District, as established by Section 3.7 of the City's Land Development Regulations.

Evaluation: There are no issues related to historic structures or markers.

COMPLIANCE WITH LAND DEVELOPMENT REGULATIONS

SITE PLAN STANDARDS

Section 2.4.9(E) of the City's Land Development Regulations (LDRs) establishes the standards with which all site plans must be found to be compliant. The application has been reviewed for compliance with the standards of Section 2.4.9(E.) An evaluation and findings of the application's compliance with the standards of Section 2.4.9(E) is provided below.

(E) Site Plan Standards

A Site Plan shall be approved only upon a finding the applicant demonstrates all of the following standards are met:

(1) ***Consistency with Comprehensive Plan***
The development and uses in the Site Plan comply with the Goals, Objectives and Policies of the Comprehensive Plan.

Evaluation & Findings: An analysis of the application's consistency with the Comprehensive Plan has been provided in this report.

(2) ***Use Allowed in Zone District***
The use is allowed in the zone district in accordance with Article 4: *Use Regulations*.

Evaluation & Findings: The subject property is zoned Commercial Intensive ("CI".) The site plan proposes a new ±58,821 sf (92 room) hotel with employee and visitor parking, storm water management facility improvements, paving, grading, and associated utility infrastructure. Table 4.1-1 of the LDRs establishes the allowable uses within each zoning district, and indicates that this zoning district permits hotels under the "Visitor Accommodations" use category.

(3) ***Zone District Use-Specific Standards***
The development and uses in the Site Plan comply with Section 4.3, *Use-Specific Standards*.

Evaluation & Findings: There are no use specific standards set forth for this use in Table 4.1-1 of the LDRs.

(4) ***Development and Design Standards***
The development proposed in the Site Plan and its general layout and design comply with all appropriate standards in Article 6: *Development Standards*.

Evaluation & Findings: The application has been reviewed for and is found to be in compliance with all relevant provisions of Article 6, *Development Standards*, including but not limited to *Section 6.1*, Off Street Parking & Loading Standards, *Section 6.2*, Tree Protection/Landscape/Xeriscape Standards, *Section 6.3*, Fencing Standards, *Section 6.4*, Exterior Lighting Standards, *Section 6.7*, Open Space Standards, *Section 6.8*, Design Standards for Business Uses, and *Section 6.9*, Environmental Protection Standards. Compliance with the relevant provisions of the aforementioned LDR sections is demonstrated within the Site Plan.

(5) ***Subdivision Standards***
In cases where a subdivision has been approved or is pending, the development proposed in the Site Plan and its general layout and design comply with all appropriate standards in Article 7: *Subdivision Standards*.

Evaluation & Findings: The proposed lot split, which is being evaluated and considered for approval administratively, is exempt from Article 7 of the LDRs, per section 2.4.10 (B)(3)(f).

(6) ***Complies with All Other Relevant Laws and Ordinances***
The proposed site plan development and use complies with all other relevant City laws and ordinances, state and federal laws, and regulations.

Evaluation & Findings: The application is consistent with all other relevant City ordinances and regulations.

COMPLIANCE WITH SECTION 3.7.2 (C), U.S. HIGHWAY 441/ INTERSTATE 75 GATEWAY OVERLAY DISTRICT

Section 3.7.2 (C) of the City's Land Development Regulations (LDRs) establishes development standards for properties located within 2,000 feet of the intersection of U.S. Highway 441 and Interstate 75. These standards address primarily design elements such as building materials and signage. The application has been reviewed for and found to be in compliance with the standards of Section 3.7.2 (C).

COMPLIANCE WITH SECTION 6.6.3, RESIDENTIAL PROTECTION STANDARDS

Section 6.6.3 of the City's Land Development Regulations (LDRs) establishes additional conditions that may be imposed for development located within 500 feet of any residential

district or adjacent to any existing single-family or two-family development. Upon evaluation of the proposed Site Plan, Staff imposed the following conditions:

1. In addition to all other landscaping requirements, an additional row of understory trees are to be planted along the rear property line to complete the visual and aural buffer between the proposed development and the existing single- family residential uses located to the north.
2. All canopy trees proposed to serve as a perimeter buffer on the rear property line shall be of a species that achieves an average height of at least fifty feet at maturity.
3. The pool area shall be closed from 10 PM to dawn on weeknights and from 11 PM to dawn on weekend nights.

COMPLIANCE WITH SECTION 6.8, DESIGN STANDARDS FOR BUSINESS USES

Section 6.8 of the City's Land Development Regulations (LDRs) establishes design standards for business uses. The standards established within Section 6.8.2 apply to business use types, except for single tenant retail sales and services uses greater than or equal to 20,000 square feet or unless otherwise exempted within Subsection 6.8.1(B.). Uses exempt from the design standards pursuant to Subsection 6.8.1(B) include use types within the industrial services, manufacturing and production, warehouse and freight movement, waste-related services, and wholesale sales use categories. The standards established within Section 6.8.3 apply to single tenant retail sales and services uses greater than 20,000 square feet.

The application has been reviewed for and found to be in compliance with the standards of Section 6.8. The proposed development is classified as a "business use type" and therefore subject to the requirements of Section 6.8.

PUBLIC FACILITIES IMPACT

Traffic Impact

Table 2. Affected Comprehensive Plan Roadway Segments[1]

Segment Number[2, 3]	Segment Description	Lanes	Functional Classification	Area Type	LOS
5 (13,14,15)	US 441 (From SR 235 to NCL)	4/D	Principle Arterial	Urban Transitioning	E

1 Source: City of Alachua Comprehensive Plan, Transportation Element.
2 For developments generating fewer than 1,000 trips, affected roadway segments are identified as those located partially or wholly within ½ mile of the development's ingress/egress [Section 2.4.14(H)(2) of the LDRs.]
3 FDOT roadway segment number shown in parenthesis (when applicable.) For the purposes of concurrency management, COA Comprehensive Plan segments that make up a portion of a larger FDOT roadway segment will be evaluated together when determining post development roadway capacity.

Table 3. Trip Generation[1]

Land Use	AADT (Enter/Exit)[2]	AM Peak Hour (Enter/Exit)[2]	PM Peak Hour (Enter/Exit)[2]
Hotel (ITE Code 310)	752 (376/376)	48 (26/22)	56 (33/23)
Total Trips	752 (376/376)	48 (26/22)	56 (33/23)

1 Source: ITE Trip Generation, 9th Edition.
2 Formulas: ITE Code 310 – AADT –8.17 trips per room x 92 rooms (50% entering/50% exiting); AM Peak Hour – .52 trips per room x 92 rooms (54% entering/46 % exiting); PM Peak Hour –.61 trips per room x 92 rooms (58% entering/42% exiting)

Table 4a. Projected Impact on Affected Comprehensive Plan Roadway Segments (AADT)

Traffic System Category	US 441 From SR 235 to NCL (13,14,15)
Average Annual Daily Trips	
Maximum Service Volume[2]	35,500
Existing Traffic[3]	24,411
Reserved Trips[4]	3,769
Available Capacity[4]	7,320
Increase/Decrease in Daily Trips Generated by Development[5]	752
Residual Capacity After Development's Impacts[6]	6,568

1 FDOT roadway segment number shown in parenthesis (when applicable.) For the purposes of concurrency management, COA Comprehensive Plan segments that make up a portion of a larger FDOT roadway segment will be evaluated together when determining post development roadway capacity.
2 Source: FDOT 2013 Quality/Level of Service Handbook, Generalized Annual Average Daily Volumes and Generalized Peak Hour Two-Way Volumes for Areas Transitioning to Urbanized Areas or Areas of 5,000 Not in Urbanized Areas.
3 Florida State Highway System Level of Service Report 2013, Florida Department of Transportation, District II, August 2014.
4 Source: City of Alachua October 2016 Development Monitoring Report.
5 Trip Distribution: US 441 (From SR 235 to NCL) Segment- 100%
6 The application is for a Final Development Order. Facility capacity and concurrency will be reserved.

Table 4b. Projected Impact on Affected Comprehensive Plan Roadway Segments (PM Peak Hour)

Traffic System Category	US 441 From SR 235 to NCL (13,14,15)
Maximum Service Volume[2]	3,200
Existing Traffic[3]	2,319
Reserved Trips[4]	362
Available Capacity[4]	519
Increase/Decrease in PM Peak Hour Trips Generated by Development[5]	56
Residual Capacity After Development's Impacts[6]	463

1 FDOT roadway segment number shown in parenthesis (when applicable.) For the purposes of concurrency management, COA Comprehensive Plan segments that make up a portion of a larger FDOT roadway segment will be evaluated together when determining post development roadway capacity.
2 Source: FDOT 2013 Quality/Level of Service Handbook, Generalized Annual Average Daily Volumes and Generalized Peak Hour Two-Way Volumes for Areas Transitioning to Urbanized Areas or Areas of 5,000 Not in Urbanized Areas.
3 Florida State Highway System Level of Service Report 2013, Florida Department of Transportation, District II, August 2014.
4 Source: City of Alachua October 2016 Development Monitoring Report.
5 Trip Distribution: US 441 (From SR 235 to NCL) Segment- 100%
6 The application is for a Final Development Order. Facility capacity and concurrency will be reserved.

Evaluation: The impacts generated by the development will not adversely affect the Level of Service (LOS) of the roadway segment identified above; therefore, the demand generated by the development is acceptable.

Potable Water Impacts

Table 5. Potable Water Impacts

System Category	Gallons Per Day
Current Permitted Capacity[1]	2,300,000
Less Actual Potable Water Flows[1]	1,190,000
Reserved Capacity[1]	112,897
Available Capacity	997,103
Projected Potable Water Demand from Application[3]	9,200
Residual Capacity	**987,903**
Percentage of Permitted Design Capacity Utilized	**57.1%**

Sources:
1 City of Alachua October 2016Development Monitoring Report.
2 Source: Chapter 64E-6, Florida Administrative Code; Formula: 100 gallons per day per room (92 rooms x 100 gpd = 9,200 gpd total)

Evaluation: The impacts generated by the development will not adversely affect the Level of Service (LOS) for potable water facilities; therefore, the demand generated by the development is acceptable.

Sanitary Sewer Impacts

Table 6. Sanitary Sewer Impacts

System Category	Gallons Per Day
Treatment Plant Current Permitted Capacity[1]	1,500,000
Less Actual Treatment Plant Flows[1]	615,000
Reserved Capacity[1]	73,307
Available Capacity	811,693
Projected Sanitary Sewer Demand from Application[2]	9,200
Residual Capacity	**802,493**
Percentage of Permitted Design Capacity Utilized	**46.5%**

Sources:
1 City of Alachua March 2016 Development Monitoring Report.
2 Source: Chapter 64E-6, Florida Administrative Code; Formula: 100 gallons per day per room (92 rooms x 100 gpd = 9,200 gpd total)

Evaluation: The impacts generated by the development will not adversely affect the Level of Service (LOS) for sanitary sewer facilities; therefore, the demand generated by the development is acceptable.

Solid Waste Impacts

Table 7. Solid Waste Impacts

System Category	Pounds Per Day	Tons Per Year
Demand from Existing Development[1]	39,152	7,145.24
Reserved Capacity[2]	4,928.41	899.43
Demand Generated by Application[2]	706	128.9
New River Solid Waste Facility Capacity[4]	**50 years**	

Sources:
1 City of Alachua October 2016 Development Monitoring Report.
2 Sincero and Sincero; Environmental Engineering: A Design Approach. Prentice Hall, New Jersey, 1996

Evaluation: The impacts generated by the development will not adversely affect the Level of Service (LOS) of solid waste facilities; therefore, the demand generated by the development is acceptable.

Recreation Facilities

The proposed development is a nonresidential development. Therefore, there are no impacts to recreation facilities. The development will have no impact to the Level of Service (LOS) of recreation facilities.

Public School Facilities

The proposed development is an exempt residential development as stated in the 2012 Revision to the Interlocal Agreement with the Alachua County Public School Board. Therefore, there are no impacts to public school facilities. The development will have no impact to the Level of Service (LOS) of public school facilities.

EXHIBIT "A"

TO

HIPP INVESTMENTS, LLC.; HOLIDAY INN - ALACHUA
SITE PLAN
STAFF REPORT

CONDITIONS:

1. The applicant agrees it shall obtain all other applicable local, state, and federal permits before the commencement of the development.
2. The applicant agrees to all of the following conditions:
    a. The applicant shall prepare and provide public utility easements in a form acceptable to the City for all public utility infrastructure which shall be maintained by the City of Alachua;
    b. Public utility easements shall include a legal description of each easement area and a boundary sketch of each described easement;
    c. The applicant shall provide public utility easements to the City for review and approval prior to recording such documents in the Public Records of Alachua County, and that public utility easements shall be recorded in the Public Records of Alachua County by the applicant prior to applying for or the issuance of building permit; and,
    d. The applicant shall incur all costs associated with the preparation and recordation of such public utility easements.
3. The applicant agrees it shall comply with all recommendations provided by the City of Alachua Public Services Department in a memorandum dated December 13, 2016.
4. The applicant agrees it shall comply with all recommendations provided by the City Engineer A.J. "Jay" Brown, Jr., PE, in a memorandum dated December 15, 2016.
5. The applicant agrees it shall comply with the requirements in accordance with Section 6.6.3, Residential Protection Standards. These requirements are:
    a. In addition to all other landscaping requirements, an additional row of understory trees are to be planted along the rear property line to complete the visual and aural buffer between the proposed development and the existing single- family residential uses located to the north.
    b. All canopy trees proposed to serve as a perimeter buffer on the rear property line shall be of a species that achieves an average height of at least fifty feet at maturity.
    c. The pool area shall be closed from 10 PM to dawn on weeknights and from 11 PM to dawn on weekend nights.
6. The applicant agrees that Conditions 1-5 as stated above do not inordinately burden the land and shall be binding upon the property owner, including any subsequent property owners, successors, or assigns, and that the development shall comply with Conditions 1 -5 as stated herein.

EXHIBIT "B"

TO

HIPP INVESTMENTS, LLC; HOLIDAY INN- ALACHUA
SITE PLAN
STAFF REPORT

SUPPORTING APPLICATION MATERIALS SUBMITTED BY CITY STAFF TO THE PLANNING AND ZONING BOARD

JBrown Professional Group
CIVIL ENGINEERING • LAND SURVEYING • PLANNING
3530 NW 43rd Street • Gainesville, FL 32606 • 352.375.8999 • JBProGroup.com

December 15, 2016

Mr. Adam Hall, AICP
Planner
City of Alachua
Planning & Community Development
P.O. Box 9
Alachua, FL 32616-0009

Re: Holiday Inn Alachua
Civil Engineering Review

Dear Mr. Hall:

As you requested I have reviewed the signed & sealed design drawings provided to us for the above referenced project, prepared by EDA, and dated 12/5/16. This review is the 2nd engineering review of this project and our review was primarily limited to the comments provided in our original review. We reviewed the latest drawing set and the comment response letter provided by EDA to determine if the first round of comments was addressed satisfactorily. This 2nd round of comments is focused on items that were not addressed or not completely addressed in the original review. The latest review comments are provided below.

Sht. C2.00

1. The valley gutter along NW 167th Blvd. @ the driveway connection was eliminated but the curb transitions were not indicated. The curb upstream of the driveway has to be removed and transitioned from standard C & G to spillout C & G in order for the valley gutter to be eliminated and the drainage to work properly within the curb profile. This should be indicated / detailed on the plans.
2. Provide better spot grading at the driveway intersection to make sure the ADA ramps are constructed properly and the crosswalk cross-slope is not steeper than 2.0%. **(Previous comment)**
3. Provide better spot grading at the ADA parking spaces to assure they are constructed with max slope of 2.0% and the sidewalk transitions are constructed properly. **(Previous Comment).** A spot at each disabled parking space bay exceeds 2.0%.
4. Is there a design detail for the retaining wall? What material is the wall supposed to be? Is it masonry or poured-in-place concrete? A note states it is to be designed by others. It is very important this wall is designed properly by a Florida Registered Structural Engineer PE. I suggest the design details for this wall be added to this plan set. (**Previous Comment**) We were not provided with this design detail although it was mentioned that it was provided

to the City. The main point is that a signed & sealed structural engineering design drawing of the retaining wall has been provided to the City.

5. Suggest showing the building roof storm drain discharge locations and their piping tie-ins to the storm sewer lines provided. **(Previous Comment)** Does any roof drain discharge to the ground in the NE quadrant of this building? Do not understand why this area, which contains a good bit of impervious area, is not directed to the stormwater retention basin.
6. Spot Elevations should be provided on the exterior of the building to identify drainage patterns away from the building. **(Previous comment was not addressed)**

Sht. C2.20

1. A note should be added in the basin plan view which identifies the location of the basin undercut limits per the GSE Geotechnical Report. These limits are to extend to the southeast of the basin to the elevation 98 contour and this is not depicted on the drawings. **(Previous Comment)**
2. Please clarify on the basin Section A-A if the undercut on the side slopes is 12" thick. **(Previous Comment)**

Sht. C4.00

1. Not sure what is meant by tapping saddle and box. Remove "box" as appropriate.

Several of the previous comments mentioned above were not addressed or not addressed completely. I would be happy to review them with the project engineer if so desired, in case there is any misunderstanding regarding my comments or intent. Please feel free to call me any time to discuss this review.

Sincerely,

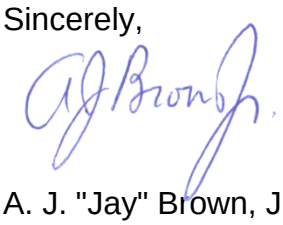

A. J. "Jay" Brown, Jr., PE
President, JBrown Professional Group Inc.

City of Alachua

TRACI L. GRESHAM
CITY MANAGER

RODOLFO VALLADARES, P.E.
PUBLIC SERVICES DIRECTOR

INTER-OFFICE COMMUNICATION

DATE: **December 13th, 2016**

TO: **Kathy Winburn, AICP**
Planning & Community Development Director

FROM: **Rodolfo Valladares, P.E.** RJV
Public Services Director

RE: **Holiday Inn**

Public Services have reviewed the Holiday Inn - Minor Site Plan and offer the following comments.

NO.	COMMENTS
1.	Fire Flow Requirements The City of Alachua is aware of the existing water distribution performance within the specific area and is passing along the following information to the designer. Fire Flow Assessment Report Request Form is typically accompanied with a $476.75 fee. However, the City will wave this fee given that an assessment within the area has been completed. Analyses indicate that the minimum fire flow capacity within this area is approximately 688 gpm for a duration of 2 hours. [FYI; No Response Required] **As noted, fire flow requirements do not exceed the minimum fire flow capacity as noted above.**
2.	Existing Drainage Structures; Sheet C2.00 Contractor to modify structure top to be flush with existing finished grade AND eliminate tripping hazard(s). Typical existing structure of 2. [Approved as Noted]
3.	Electric Utility Plan; Sheet C4.00 See attachment for comments on sheet. Comments are noted in RED. [Revise and Resubmit]
4.	Water Main; Sheet C4.00 Provide the 3 x 2 PVC Tee AFTER the 3 inch water main valve. [Revise and Resubmit]
5.	Valves; Sheet C4.00 Note 7 shall reference 'all' 2-inch valves. All 2 inch valves, unless 18 inch or shallower for meter control, shall be cast iron, resilient seat gate valves with standard 2-inch operating nut, threaded with galvanized nipple between the vales and the tapping saddle or tapped tee. [Approved as Noted]

NO.	COMMENTS
6.	Fire Hydrant; Sheet - C4.00 Relocate hydrant so that supply line does not run under paved parking area. [Revise and Resubmit]
7.	Manhole; Sheet - C4.00 Provide detail for MH 1. [Revise and Resubmit] Manhole; Sheet - C4.00 Referenced sanitary manhole does not 'exist'. Provide sanitary manhole 6-inches above grade and a 10:1 slope to grade. **[Revise and Resubmit]**
8.	General Comment; Sheet C4.10 Water Distribution System, Note 1; typo STOM = STORM [Approved as Noted]
9.	CoA Design and Construction Requirements; Reference requirements and details within design. Details shall be in accordance with CoA details. **[Approved as Noted]**
END OF COMMENTS	

Please advise if you have any questions or require additional information.

cc: Adam Hall – AICP Planner
Harry Dillard – Lead Engineering Technician

City of Alachua
Development Review Team (DRT) Meeting
Project Name: Holiday Inn Applicant DRT
Meeting Date: November 21, 2016

PLEASE PRINT CLEARLY

Name	Email	Mailing Address	Phone
ADAM HALL	ahall@cityofalachua.com	COA	386 418 6100 x 108
Rodolfo Valladares		CoA	386-418-6140
Justin Tabor	jtabor@cityofalachua.com	CoA	386-418-6100 x 107
RANDY GIBBONS	RGIBBONS@MHHOTELS.COM	100 2ND AVE S ST PETE, SUITE 1103, 33701	813-995-4444
Meagen Dickey	mdickey@edafl.com	eda	(352)373 3541
Virginia Johns	vjhipp@gmail.com	Po Box 1000, Alachua, FL	386 462 2047
SERGIO REYES	SREYES@eda	eda	352-373-3541
Traci Gresham	tgresham@cityofalachua.com		386-418-6100
Adam Boukan	aboukan@cityofalachua.com	COA	386-418-6100
Marian Rush	marian@robertarush.com	11 SE 2nd St. G'ville 32601	352 373 9566

DEVELOPMENT REVIEW TEAM SUMMARY

PROJECT NAME: Holiday Inn

APPLICATION TYPE: Site Plan

APPLICANT/PROPERTY OWNER: Hipp Investments, LLC

AGENT: Sergio Reyes, P.E., eda engineers-surveyors-planners, inc.

DRT MEETING DATE: November 21, 2016

DRT MEETING TYPE: Applicant

FLUM DESIGNATION: Commercial

ZONING: CI

OVERLAY: I-75/441 Gateway

DEVELOPMENT AREA ACREAGE: ± 4.24 acres

PARCEL: 03053-0001-001

PROJECT LOCATION: South of Heritage Oaks Subdivision, east of Alachua Market Place (Publix), west of Megahee Property, north of US Highway 441

PROJECT SUMMARY: Construction of a 92 room hotel with a 24 seat meeting room, employee and visitor parking, storm water management facility improvements and associated utility infrastructure.

RESUBMISSION DUE DATE: All data, plans, and documentation addressing the insufficiencies identified below must be received by the Planning Department on or before **5:00 PM** on **Monday, December 5, 2016.**

Deficiencies to be Addressed

Unless otherwise noted, references to code Sections refer to City of Alachua Land Development Regulations.

A. *Comprehensive Plan Consistency*
   1. Submitted Public School Student Generation Form does not indicate that the proposed development is exempt from Public School Concurrency requirements. Per the Interlocal Agreement for Public School Facility Planning between the City of Alachua and the School Board of Alachua County, exempts group quarters that do not generate students that will be assigned to public school facilities, including motels and hotels.
   2. Future Land Use Element Policy 1.3.d creates design and performance standards for commercial development proposals. Policy 1.3.d.9 has not been adequately addressed. Site appears to be potentially constrained by the presence of unsuitable soils (Bivans Sand, 5% to 8% slopes). Please address.

B. *Concurrency Impact Analysis*
   1. The Concurrency Impact Analysis Report references "Table 1" as a data source for available capacities for potable water, wastewater, and solid waste. Table 1 (and Table 2) not provided in Concurrency Impact Analysis Report.

C. *Development Standards*
   1. Section 3.7.2 (C) – US Highway 441/ Interstate 75 Gateway Overlay District
      a. To demonstrate compliance with 3.7.2 (C)(5)ii and 3.7.2 (C)(5)vi, a description of each façade material and color is required. See comment C.7.b below.
      b. To demonstrate compliance with 3.7.2 (C)(5)vi, please identify accent materials referenced in Comment Response letter submitted that is dated October 31, 2016 . Three architectural elements from a provided list of elements are required for building walls facing a public right-of-way; Staff has identified two architectural elements from the provided list: a prominent public entrance and a change in building materials.
   2. Section 6.1-Off Street Parking and Loading Standards
      a. Plans must demonstrate compliance with Section 6.1.7 (B), which requires that loading areas have a 14' vertical clearance. Plans appear to show that the distance from grade to the bottom of the roof of the porte cochere is less than 14'.
      b. In parking lots with 100 parking spaces or more, a pedestrian crosswalk is required between the primary entrance of the structure and the parking area. Crosswalk should be at least 10' feet wide and raised, striped, or otherwise designated with alternative materials.
   3. Section 6.2- Tree protection/landscape/xeriscape standards
      a. Generally, the plans do not indicate how the tree preservation credits will be used. Tree preservation credits can be used towards site landscaping requirements, perimeter buffering, and interior and perimeter landscaping for parking areas. The credits cannot be used towards tree mitigation. The landscaping plans should show the required number of trees for each landscaped area and how many tree preservation credits will be applied to

that required area. Landscaping plan should indicate which trees are being counted towards meeting the required mitigation amounts.

b. Section 6.2.1 (D)(4)(b) requires that at least 75% of trees used for mitigation purposes come from the recommended tree list.
c. Section 6.2.2(D)(4)(b) requires that 6 understory trees per acre (25 total) are planted with 25% (6) planted on each side of the building face and 50% (13) in front of the building. The west façade only has 5 understory trees; an additional understory tree is required for this façade.
d. The parking lot buffer calculation of 400 linear feet appears to be low. Staff has estimated that the perimeter length used to determine landscaping requirements is closer to 650 feet. Please confirm. This would require 28 canopy trees and 14 understory trees. Currently, it appears that 26 canopy trees and 12 understory trees. Two more canopy trees and two more understory trees are required.
e. Eastern portion of parking lot does not have continuous shrub row or short fence or wall; required to meet Section 6.2.2(D)(2)(b)(iv)c.
f. Sheet L-1 shows a 30" Laurel Oak being removed, but this is not listed on the mitigation table. May be a mislabel. Additionally, please identify "Hazard" or "Poor" trees on sheet L-1.
g. Plans should indicate which existing trees are being used to meet the requirements for either the perimeter buffer or site landscaping requirements for building facades. Staff can only identify 14 canopy trees in buffer area (13 proposed, 1 existing); 16 canopy trees are required for the rear perimeter buffer.
h. Confirm location of fencing on eastern property boundary. Callout on Sheet C1.00 seems to indicate fencing along entire eastern property boundary, but sketch of fence line appears to terminate at front building line.
i. Irrigation plans must be shown to demonstrate compliance with Section 6.2.2 (D)(6)(b).
j. Pool equipment or structure not shown on landscaping plans (shown on architectural plans, however); per Section 6.2.3 (D), equipment must be screened with solid wood, masonry, stone, or finished metal.
k. Sheet L-3 does not provide calculation for southwest property line buffer; perimeter buffer must comply with Section 4.7.2(C)(5)(d)iii.
l. Site landscaping calculations should be shown on sheet L-3; landscaping plans should indicate which trees are being used to meet building façade requirements.
m. Mitigation not adequately addressed. See Comment C.3.a. above. Plans should indicate which trees are being used to meet minimum mitigation requirements. If required mitigation amounts cannot be met on site, the City permits offsite mitigation through a tree banking program. See Section 6.2.1(D)(7).
n. Per Section 6.2.2(D)(1)(c), an additional three canopy trees are required along the east and west façades.
o. Per Section 6.2.2(D)(1)(c), an additional six canopy trees are required along the north facade.
p. Per Section 6.2.2(D)(1)(c), an additional six canopy trees are required along the south (primary) facade.

4. Section 6.3- Fencing Standards
   a. Provide cross section/ design detail for retaining wall.
5. Section 6.4- Exterior lighting Standards
   a. In order to ensure compliance with 6.4.4, please provide schematics or cut sheets for the CREE ARE-EDG-4M-**-06-E-12-700-40K (labeled P4T on Photometric Plan)
   b. Illumination on western property boundary must be shielded to prevent spillover onto adjacent property. See Section 6.4.4 (F), City of Alachua Land Development Regulations.
   c. Illumination on eastern property boundary must be shielded to prevent spillover onto adjacent property. See Section 6.4.4 (F), City of Alachua Land Development Regulations.
   d. Provide cross section of porte-cochere showing lights or note on plans indicating compliance with Section 6.4.6 City of Alachua Land Development Regulations.
6. Section 6.6.3 – Residential Protection Standards
   a. Section 6.6.3 permits additional requirements and conditions for nonresidential development located within 500' of any residential district. The conditions below are intended to reduce or minimize the potential adverse impacts that the proposed development may have on the residential uses found north of the subject property, in the Heritage Oaks subdivision. These requirements and conditions are in addition to all other requirements found in the City of Alachua Land Development Regulations:
      i. In addition to all other landscaping requirements, understory trees shall be planted along the rear property line to complete the visual and aural buffer between uses.
      ii. All canopy trees proposed to serve as a perimeter buffer on the rear property line shall be of a species that achieves an average height of at least 50 feet at maturity.
      iii. Proposed privacy fence along rear property line shall be a minimum of 8 feet tall, but shall otherwise meet all other requirements of Section 6.3-Fencing Standards.
      iv. Pool area shall be closed from 10 PM to dawn on weeknights and from 11 PM to dawn on weekend nights.
7. Section 6.8- Design Standards for Business Uses
   a. Façade massing requirements do not appear to be met. If utilizing a "pilaster" as an offset alternative, the pilaster must be at least 1' in depth (appears to only be 6" as shown on architectural plans).
   b. Plans should show percentage calculations of each building material on each façade.
   c. Distance between building offsets or offset alternatives appears to exceed 30' on 4 of the 6 building "segments".
   d. Identify building material below windows.
   e. Identify yellow material located at parapet on Drawing A-201.

D. *Fire Marshal/Public Services/Outside Engineering Review Comments*

1. The applicant must address the comments provided by Brian Green, Fire Inspector for Alachua County Fire Rescue (attached to this memo).
2. The applicant must address the comments provided by A. J. "Jay" Brown, Jr., PE of JBrown Professional Group, Inc in a letter received by the City on November 15, 2016 (attached to this memo).
3. The applicant must comply with all comments provided by the Public Services Department in a memo dated November 16, 2016 (attached to this memo).

E. *Miscellaneous/General Issues*

1. On Sheet C0.00, Parcels located and labeled in the Heritage Oaks subdivision appear to be mislabeled. Provide Future Land Use Designations and Zoning Designations for these parcel numbers.
2. The Site Plan should show Floor to Area calculation on site plan. Per Comprehensive Plan Future Land Use Element Policy 1.3.d. 11, the maximum Floor to Area ratio for parcels more than 1 acre, but less than 5 acres is .75.
3. Inset map appears to call out the CBD of the City of Alachua instead of actual location of development.
4. Provide breakdown on square footage devoted to guestrooms on site plan.

ALL COMMENTS AND REQUIREMENTS LISTED ABOVE MUST BE COMPLIED WITH AND PROVIDED TO CITY STAFF ON OR BEFORE 5:00 PM ON THE RESUBMISSION DATE OF DECEMBER 5, 2016.

'own Professional Group
'GINEERING • LAND SURVEYING • PLANNING
Street • Gainesville, FL 32606 • 352.375.8999 • JBProGroup.com

ıd
ı Community Development
ıox 9
ıchua, FL 32616-0009

Re: Holiday Inn Alachua
Civil Engineering Review

Dear Mr. Hall:

As you requested I have reviewed the signed & sealed design drawings provided to us for the above referenced project, prepared by EDA, and dated 10/28/16. I have reviewed the design from an engineering standpoint to provide the City of Alachua an independent civil engineering review. My review comments of the design are provided below.

General

1. The design drawings are well done and it is a very complete set of plans. My comments should most likely be straightforward for the design engineer to address.

Sht. C0.00

1. In the parking calculations under bicycle parking, adjust the number of required parking spaces to 9.4, not 94.
2. Please explain the inconsistency with the impervious area identified on this sheet (87,025 SF) vs. that identified in the stormwater report (71,956 SF). This is not a minor difference (0.35 acres) and should be adjusted. If the amount on the cover sheet is correct, then the stormwater calculations should be corrected and revised.

Sht. C0.10

1. Suggest adding abbreviations for your wall callout abbreviations TW & BW.

Sht. C0.20

1. This sheet shows the proposed Emerick Pediatric project which has a stormwater basin northwest of the project entrance. The topographic survey does not indicate this basin as existing. I suggest verifying that this basin does not discharge to the Holiday Inn site or cause additional offsite stormwater runoff to be directed to the Holiday Inn site.

Sht. C2.00

1. Be sure valley gutter is desired along NW 167th Blvd. @ the driveway connection. Where feasible it is desired to eliminate the valley gutter as a long term maintenance issue. I suggest eliminating it and detailing curb transitions as required.
2. Label the Type F Curb & Gutter at the driveway entrance and the valley gutter, if it remains.
3. Identify and label any spillout curb and transitions, if required.
4. Provide better spot grading at the driveway intersection to make sure the ADA ramps are constructed properly and the crosswalk cross-slope is not steeper than 2.0 %.
5. Make sure the crosswalk striping is striped from curb to curb.
6. Label the predominant curb within the parking lot as 6" standard curb (Typ.)
7. Provide better spot grading at the ADA parking spaces to assure they are constructed with max slope of 2.0% and the sidewalk transitions are constructed properly.
8. The retaining wall is provided with callouts referring to TW and BW. These terms are not defined in your legend and abbreviations and are not standard FDOT abbreviations. I assume TW is top of wall, which makes sense. I am unsure what BW stands for. If it stands for bottom of wall, what does that refer to? The "BW" elevations shown along the inside of the wall would not be the ground surface at these locations. Perhaps that would be the elevation of the wall at the top of the footing? Or maybe the bottom of the wall footing. Please provide a description. These BW elevations do not seem to follow a pattern so please verify they are accurately describing the wall design.
9. Is there a design detail for the retaining wall? What material is the wall supposed to be? Is it masonry or poured-in-place concrete? A note states it is to be designed by others. It is very important this wall is designed properly by a Florida Registered Structural Engineer PE. I suggest the design details for this wall be added to this plan set.
10. The 6" and 8" storm pipes discharging into S-1 and S-4 are labeled as RCP. RCP is not made in those sizes. Please revise to CPE or PVC or other acceptable pipe material.
11. Suggest showing the building roof storm drain discharge locations and their piping tie-ins to the storm sewer lines provided.
12. Spot Elevations should be provided on the exterior of the building to identify drainage patterns away from the building.
13. The pool area and sidewalk north of the pool area has very little grading. I suggest this be revised to include additional grading and to make sure storm water runoff from the north sidewalk flows to S-1. This sidewalk appears to be graded flat right now and this could cause drainage ponding.
14. The exterior sidewalk at the far northeast corner has 0.92' of fall across the corner. This may be a typo and seems to be a severe cross slope. Suggest revising it.
15. Provide spot grades for the bicycle parking pad.

16. The grading of the dumpster pad calls for a flush connection between pavement and the concrete pad, yet the detail on Sht. C2.10 shows a 6" step-up. Please correct one or the other. A-001 also shows details at the dumpster pad but it is unclear from those details whether or not the 6" step-up is provided or not.
17. ****THIS IS VERY IMPORTANT**** The geotechnical report indicates a very special manner in which the building shall be undercut and backfilled, and also identifies the need for an underdrain system to be provided around the building. Please provide a note referencing the building undercut per the Geotechnical report. Please also provide the design and details for the underdrain recommended in the report. The report indicates the north, west, and south side of the building should be provided with underdrain. This should be designed and the details added to the drawings.

Sht. C2.20

1. The Typical Basin Section A-A line that runs through the basin should be redrawn to be perpendicular to the basin sides slopes and to reach the pavement so it accurately identifies the location of the Section A-A drawn in the detail.
2. A note should be added in the basin plan view which identifies the location of the basin undercut limits per the GSE Geotechnical Report. These limits are to extend to the southeast of the basin to the elevation 98 contour and this is not depicted on the drawings.
3. Suggest relocating the silt fence shown so that it is beyond the limits of the basin back slope. This will allow the construction activity to be within the protected area. The silt fence should also be drawn beyond the rubble pad at MES-2 and all other construction work limits.
4. In the Section A-A detail the maintenance path is indicated to be 10:1 and the slope to tie back up to the parking lot is indicated to be 6:1. It is not designed that way in the proposed plan view contours. Please revise one or the other.
5. Suggest that the note in the Section A-A detail pointing to the undercut be expanded to identify the exact GSE Report which provides the undercut recommendations.
6. Please clarify on the basin Section A-A if the undercut on the side slopes is 12" thick.
7. Label the basin outfall detail S-12.
8. Suggest the S-12 detail profile views be labeled "Front View" and "Side View" or some other label like the upper detail is labeled "Plan View". The right most view or "Side View" should be redrawn to match the left "Front View" in scale, so they make more sense next to each other. The side view is drawn much shorter than the front view and it does not present the detail well. It is also suggested that the basin bottom be shown on the front and side view.

Sht. C3.10

1. Suggest relocating the silt fence shown so that it is beyond the work limits of the basin back slope and other construction activity. This will allow the construction activity to be within the protected area. The silt fence should also be drawn beyond the rubble pad at MES-2.

Sht. C4.00

1. Provide callouts for the water main and fire line pipe fittings running through the project.
2. The note pointing to the fire hydrant includes a tap. This should include the 8" gate valve and the 8" bend but not a tap.

3. Does Note 1 of the Utility Notes apply?
4. Is the wastewater line lateral supposed to be 8" diameter? Usually these are more commonly 6" diameter. The slope of the wastewater lateral is 22.39%, which is severe. Perhaps the invert at the manhole can be raised or the cleanout invert lowered, or an outside drop provided to reduce this slope. Please coordinate with the City of Alachua Utilities Dept. to make sure they approve of this 8" lateral slope.
5. Suggest adding the electrical lighting locations to this drawing.
6. Where is the primary electric feed coming from? Should the primary electric lines feeding the transformer be shown on this drawing? It may be shown on a separate electrical plan, which is fine if coordinated properly.

I would also point out that I confined my review to the drawings and information I was provided. I did not review the stormwater report modeling and basin design since the project will go through a separate stormwater design review with SRWMD, and that would satisfy the City of Alachua stormwater concerns. If you would also like us to review the stormwater design on the City's behalf, please let me know.

I will make myself available to City staff or the EDA project manager if there are any questions related to my comments or a desire to meet and review the comments in person. Please let me know if I can provide any other services related to this project.

Sincerely,

A. J. "Jay" Brown, Jr., PE
President, JBrown Professional Group Inc.

Zimbra **ad_hall@cityofalachua.org**

RE: Electronic Application for Site Plan for Holiday Inn Alachua

From : Brian Green <bgreen@AlachuaCounty.US>
Subject : RE: Electronic Application for Site Plan for Holiday Inn Alachua
To : Adam Hall <ad_hall@cityofalachua.org>

Tue, Nov 15, 2016 02:26 PM
Holiday Inn Alachua

Adam,

The flow test was done along US 441 at a much lower elevation than where the hotel will be. A new flow test shall be done from a fire hydrant closer to the hotel.

Brian Green
Alachua County Fire Rescue
Life Safety / Internal Affairs Branch
352-384-3103 office
352-494-3140 cell
352-384-3157 fax
BGREEN@ALACHUACOUNTY.US

From: Adam Hall [mailto:ad_hall@cityofalachua.org]
Sent: Tuesday, November 15, 2016 2:11 PM
To: Brian Green
Subject: Fwd: Electronic Application for Site Plan for Holiday Inn Alachua

Brian,

I wanted to confirm that you had received this. If comments have been submitted to me, I have not received them yet. The Staff DRT is scheduled for this Thursday, November 17, 2016.

Adam H

From: "Adam Hall" <ad_hall@cityofalachua.org>
To: "Brian Green" <bgreen@alachuacounty.us>, "William P. Whitelock" <wi_whitelock@cityofalachua.org>

Sent: Monday, November 7, 2016 1:51:09 PM
Subject: Electronic Application for Site Plan for Holiday Inn Alachua

Brian and Bill,

Please find a link to an electronic version of plans for the Holiday Inn Alachua site plan application here: http://cloud.cityofalachua.org/index.php/s/jOownUXgLCogut2. Please submit any comments by Wednesday, November 16, 2016 at 5 PM. The Staff DRT is schedule for Thursday, November 17, 2016 at 2 PM. The applicant DRT is scheduled for Monday, November 21, 2016 at 2 PM.

Bill, the application can also be found on our shared drive at: X:\Planning and Community Development\Planning Division\Development Applications\Site Plans\Holiday Inn\Submittals \2016_10_31 .

If you have any questions or need more information, please let me know.

Thank you,

--
Adam Hall, AICP | Planner | Office of Planning and Community Development
City of Alachua | ahall@cityofalachua.com | Phone: 386.418.6121 | Direct: 386.418.6125

From : Adam Hall <ad_hall@cityofalachua.org>
Subject : Fwd: Electronic Application for Site Plan for Holiday Inn Alachua
To : Brian Green <bgreen@alachuacounty.us>

Tue, Nov 15, 2016 02:10 PM
Holiday Inn Alachua

Brian,

I wanted to confirm that you had received this. If comments have been submitted to me, I have not received them yet. The Staff DRT is scheduled for this Thursday, November 17, 2016.

Adam H

City of Alachua

TRACI L. GRESHAM
CITY MANAGER

RODOLFO VALLADARES, P.E.
PUBLIC SERVICES DIRECTOR

INTER-OFFICE COMMUNICATION

DATE: November 16th, 2016

TO: Kathy Winburn, AICP
Planning & Community Development Director

FROM: Rodolfo Valladares, P.E. RSV
Public Services Director

RE: Holiday Inn

Public Services have reviewed the Holiday Inn - Minor Site Plan and offer the following comments.

NO.	COMMENTS
1.	Fire Flow Requirements The City of Alachua is aware of the existing water distribution performance within the specific area and is passing along the following information to the designer. Fire Flow Assessment Report Request Form is typically accompanied with a $476.75 fee. However, the City will wave this fee given that an assessment within the area has been completed. Analyses indicate that the minimum fire flow capacity within this area is approximately 688 gpm for a duration of 2 hours. **[FYI; No Response Required]**
2.	Existing Drainage Structures; Sheet C2.00 Contractor to modify structure top to be flush with existing/finished grade AND eliminate tripping hazard(s). Typical existing structure of 2. **[Approved as Noted]**
3.	Electric Utility Plan; Sheet C4.00 See attachment for comments on sheet. Comments are noted in RED. **[Revise and Resubmit]**
4.	Water Main; Sheet - C4.00 Provide the 3 x 2 PVC Tee AFTER the 3-inch water main valve. **[Revise and Resubmit]**
5.	Valves; Sheet - C4.00 Note 7; shall reference 'all' 2-inch valves. All 2-inch valves, unless 18-inch or shallower for meter control, shall be cast iron, resilient seat gate valves with standard 2-inch operating nut, threaded with galvanized nipple between the vales and the tapping saddle or tapped tee. **[Approved as Noted]**

HOWARD WILL FORWARD COMMENTS TO SERGIO.

PO Box 9
Alachua, Florida 32616-0009

"The Good Life Community"
www.cityofalachua.com

Phone: (386) 418-6140
Fax: (386) 418-6164

NO.	COMMENTS
6.	Fire Hydrant: Sheet - C4.00 Relocate hydrant so that supply line does not run under paved parking area. **[Revise and Resubmit]**
7.	Manhole: Sheet - C4.00 Provide detail for MH-1. **[Revise and Resubmit]**
8.	General Comment: Sheet C4.10 Water Distribution System, Note 1; typo STOM = STORM **[Approved as Noted]**
	END OF COMMENTS

RODOLFO WILL SPEAK W/ PLANNING RE LOCATING FIRE HYDRANT ON NORTH SIDE OF ENTRANCE ROAD.

Please advise if you have any questions or require additional information.

cc: Adam Hall – AICP Planner
Harry Dillard – Lead Engineering Technician

City of Alachua

TRACI L. GRESHAM
CITY MANAGER

RODOLFO VALLADARES, P.E.
PUBLIC SERVICES DIRECTOR

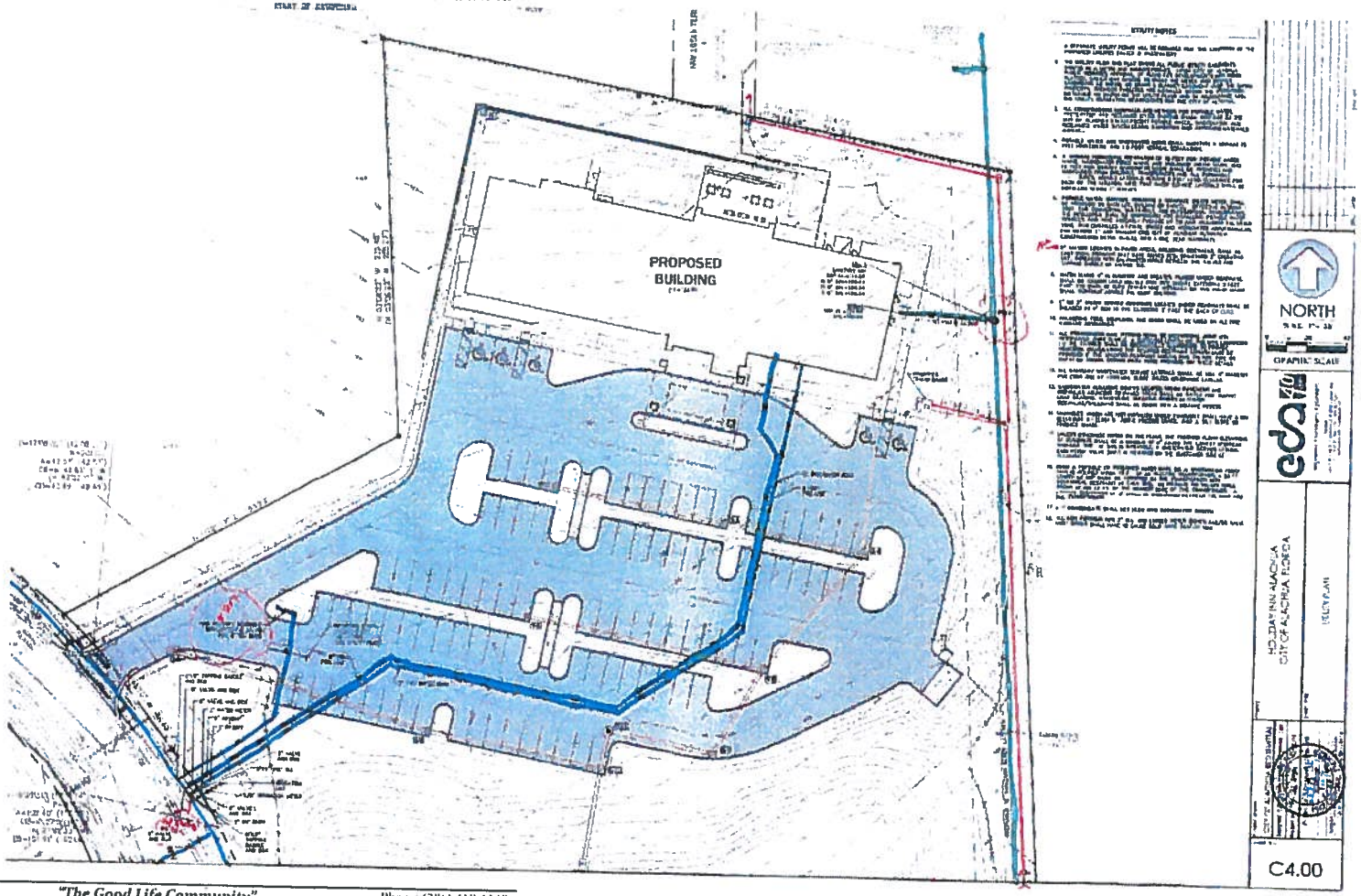

PO Box 9
Alachua, Florida 32616-0009

"The Good Life Community"
www.cityofalachua.com

Phone: (386) 418-6140
Fax: (386) 418-6164

- TAPS, # OF
- FIRE HYDRANT
- FENCE, HEIGHT ON BACK
- FENCE, HEIGHT ON EAST SIDE

DEVELOPMENT REVIEW TEAM SUMMARY

PROJECT NAME: Holiday Inn

APPLICATION TYPE: Site Plan

APPLICANT/PROPERTY OWNER: Hipp Investments, LLC

AGENT: Sergio Reyes, P.E., eda engineers-surveyors-planners, inc.

DRT MEETING DATE: November 17, 2016

DRT MEETING TYPE: Staff

FLUM DESIGNATION: Commercial

ZONING: CI

OVERLAY: I-75/441 Gateway

DEVELOPMENT AREA ACREAGE: ± 4.24 acres

PARCEL: 03053-0001-001

PROJECT LOCATION: South of Heritage Oaks Subdivision, east of Alachua Market Place (Publix), west of Megahee Property, north of US Highway 441

PROJECT SUMMARY: Construction of a 92 room hotel with a 24 seat meeting room, employee and visitor parking, storm water management facility improvements and associated utility infrastructure.

RESUBMISSION DUE DATE: All data, plans, and documentation addressing the insufficiencies identified below must be received by the Planning Department on or before **5:00 PM** on **Monday, December 5, 2016.**

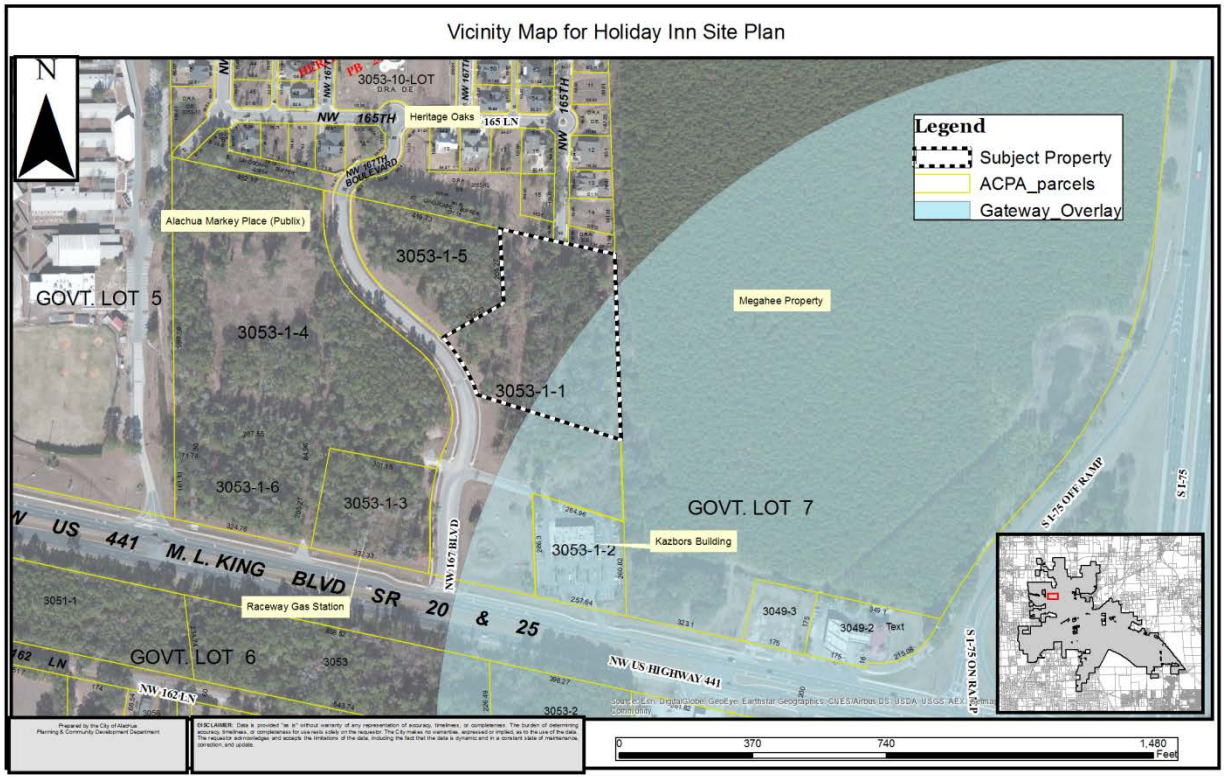

Deficiencies to be Addressed

Unless otherwise noted, references to code Sections refer to City of Alachua Land Development Regulations.

A. *Comprehensive Plan Consistency*

1. Submitted Public School Student Generation Form does not indicate that the proposed development is exempt from Public School Concurrency requirements. Per the Interlocal Agreement for Public School Facility Planning between the City of Alachua and the School Board of Alachua County, exempts group quarters that do not generate students that will be assigned to public school facilities, including motels and hotels.
2. Future Land Use Element Policy 1.3.d creates design and performance standards for commercial development proposals. Policy 1.3.d.9 has not been adequately addressed. Site appears to be potentially constrained by the presence of unsuitable soils (Bivans Sand, 5% to 8% slopes). Please address.

B. *Concurrency Impact Analysis*

1. The Concurrency Impact Analysis Report references "Table 1" as a data source for available capacities for potable water, wastewater, and solid waste. Table 1 (and Table 2) not provided in Concurrency Impact Analysis Report.

C. *Development Standards*

1. Section 3.7.2 (C) – US Highway 441/ Interstate 75 Gateway Overlay District
   a. To demonstrate compliance with 3.7.2 (C)(5)ii and 3.7.2 (C)(5)vi, a description of each façade material and color is required. See comment C.7.b below.
   b. To demonstrate compliance with 3.7.2 (C)(5)vi, please identify accent materials referenced in Comment Response letter submitted that is dated October 31, 2016 . Three architectural elements from a provided list of elements are required for building walls facing a public right-of-way; Staff has identified two architectural elements from the provided list: a prominent public entrance and a change in building materials.
2. Section 6.1-Off Street Parking and Loading Standards
   a. Plans must demonstrate compliance with Section 6.1.7 (B), which requires that loading areas have a 14' vertical clearance. Plans appear to show that the distance from grade to the bottom of the roof of the porte cochere is less than 14'.
   b. In parking lots with 100 parking spaces or more, a pedestrian crosswalk is required between the primary entrance of the structure and the parking area. Crosswalk should be at least 10' feet wide and raised, striped, or otherwise designated with alternative materials.
3. Section 6.2- Tree protection/landscape/xeriscape standards
   a. Generally, the plans do not indicate how the tree preservation credits will be used. Tree preservation credits can be used towards site landscaping requirements, perimeter buffering, and interior and perimeter landscaping for parking areas. The credits cannot be used towards tree mitigation. The landscaping plans should show the required number of trees for each landscaped area and how many tree preservation credits will be applied to

that required area. Landscaping plan should indicate which trees are being counted towards meeting the required mitigation amounts.

b. Section 6.2.1 (D)(4)(b) requires that at least 75% of trees used for mitigation purposes come from the recommended tree list.
c. Section 6.2.2(D)(4)(b) requires that 6 understory trees per acre (25 total) are planted with 25% (6) planted on each side of the building face and 50% (13) in front of the building. The west façade only has 5 understory trees; an additional understory tree is required for this façade.
d. The parking lot buffer calculation of 400 linear feet appears to be low. Staff has estimated that the perimeter length used to determine landscaping requirements is closer to 650 feet. Please confirm. This would require 28 canopy trees and 14 understory trees. Currently, it appears that 26 canopy trees and 12 understory trees. Two more canopy trees and two more understory trees are required.
e. Eastern portion of parking lot does not have continuous shrub row or short fence or wall; required to meet Section 6.2.2(D)(2)(b)(iv)c.
f. Sheet L-1 shows a 30" Laurel Oak being removed, but this is not listed on the mitigation table. May be a mislabel. Additionally, please identify "Hazard" or "Poor" trees on sheet L-1.
g. Plans should indicate which existing trees are being used to meet the requirements for either the perimeter buffer or site landscaping requirements for building facades. Staff can only identify 14 canopy trees in buffer area (13 proposed, 1 existing); 16 canopy trees are required for the rear perimeter buffer.
h. Confirm location of fencing on eastern property boundary. Callout on Sheet C1.00 seems to indicate fencing along entire eastern property boundary, but sketch of fence line appears to terminate at front building line.
i. Irrigation plans must be shown to demonstrate compliance with Section 6.2.2 (D)(6)(b).
j. Pool equipment or structure not shown on landscaping plans; per Section 6.2.3 (D), equipment must be screened with solid wood, masonry, stone, or finished metal.
k. Sheet L-3 does not provide calculation for southwest property line buffer; perimeter buffer must comply with Section 4.7.2(C)(5)(d)iii.
l. Site landscaping calculations should be shown on sheet L-3; landscaping plans should indicate which trees are being used to meet building façade requirements.
m. Mitigation not adequately addressed. See Comment C.3.a. above. Plans should indicate which trees are being used to meet minimum mitigation requirements. If required mitigation amounts cannot be met on site, the City permits offsite mitigation through a tree banking program. See Section 6.2.1(D)(7).
n. Per Section 6.2.2(D)(1)(c), an additional three canopy trees are required along the east and west façades.
o. Per Section 6.2.2(D)(1)(c), an additional six canopy trees are required along the north facade.
p. Per Section 6.2.2(D)(1)(c), an additional six canopy trees are required along the south (primary) facade.

4. Section 6.3- Fencing Standards
    a. Provide cross section/ design detail for retaining wall.
5. Section 6.4- Exterior lighting Standards
    a. In order to ensure compliance with 6.4.4, please provide schematics or cut sheets for the CREE ARE-EDG-4M-**-06-E-12-700-40K (labeled P4T on Photometric Plan)
    b. Illumination on western property boundary must be shielded to prevent spillover onto adjacent property. See Section 6.4.4 (F), City of Alachua Land Development Regulations.
    c. Illumination on eastern property boundary must be shielded to prevent spillover onto adjacent property. See Section 6.4.4 (F), City of Alachua Land Development Regulations.
    d. Provide cross section of porte-cochere showing lights or note on plans indicating compliance with Section 6.4.6m City of Alachua Land Development Regulations.
6. Section 6.6.3 – Residential Protection Standards
    a. Section 6.6.3 permits additional requirements to be added to nonresidential development located within 500' of any residential district. The requirements below are intended to reduce or minimize the potential adverse impacts that the proposed development may have on the residential uses found north of the subject property, in the Heritage Oaks subdivision.
    b. In addition to all other landscaping requirements, understory trees shall be planted along the rear property line to complete the visual and aural buffer between uses.
    c. All canopy trees proposed to serve as a perimeter buffer on the rear property line shall be of a species that achieves an average height of at least 50 feet at maturity.
    d. Proposed privacy fence along rear property line shall be a minimum of 8 feet tall, but shall otherwise meet all other requirements of Section 6.3- Fencing Standards.
    e. Pool area shall be closed from 10 AM to dawn on weeknights and from 11 AM to dawn on weekend nights.
7. Section 6.8- Design Standards for Business Uses
    a. Façade massing requirements do not appear to be met. If utilizing a "pilaster" as an offset alternative, the pilaster must be at least 1' in depth (appears to only be 6" as shown on architectural plans).
    b. Plans should show percentage calculations of each building material on each façade.
    c. Distance between building offsets or offset alternatives appears to exceed 30' on 4 of the 6 building "segments".
    d. Identify building material below windows.
    e. Identify yellow material located at parapet on Drawing A-201.

D. *<u>Fire Marshal/Public Services/Outside Engineering Review Comments</u>*

1. The applicant must address the comments provided by Brian Green, Fire Inspector for Alachua County Fire Rescue (attached to this memo).

2. The applicant must address the comments provided by A. J. "Jay" Brown, Jr., PE of JBrown Professional Group, Inc in a letter received by the City on November 15, 2016 (attached to this memo).
3. The applicant must comply with all comments provided by the Public Services Department in a memo dated November 16, 2016 (attached to this memo).

E. *Completeness Review Comments:*

1. The applicant must address all completeness review deficiencies as provided in correspondence dated November 3, 2016 and noted below:

Required Attachment 3: Fire Department Access and Water Supply Plan.
Action Needed to Address Deficiency: Please provide documentation from the local water purveyor (City of Alachua Public Services) verifying required flow can be provided at proposed development site.

F. *Miscellaneous/General Issues*

1. On Sheet C0.00, Parcels located and labeled in the Heritage Oaks subdivision appear to be mislabeled. Provide Future Land Use Designations and Zoning Designations for these parcel numbers.
2. The Site Plan should show Floor to Area calculation on site plan. Per Comprehensive Plan Future Land Use Element Policy 1.3.d. 11, the maximum Floor to Area ratio for parcels more than 1 acre, but less than 5 acres is .75.
3. Inset map appears to call out the CBD of the City of Alachua instead of actual location of development.
4. Provide breakdown on square footage devoted to guestrooms on site plan.

ALL COMMENTS AND REQUIREMENTS LISTED ABOVE MUST BE COMPLIED WITH AND PROVIDED TO CITY STAFF ON OR BEFORE 5:00 PM ON THE RESUBMISSION DATE OF DECEMBER 5, 2016.

JBrown Professional Group
CIVIL ENGINEERING • LAND SURVEYING • PLANNING
3530 NW 43rd Street • Gainesville, FL 32606 • 352.375.8999 • JBProGroup.com

August 31, 2016

Mr. Adam Hall, AICP
Planner
City of Alachua
Planning & Community Development
P.O. Box 9
Alachua, FL 32616-0009

Re: Holiday Inn Alachua
Civil Engineering Review

Dear Mr. Hall:

As you requested I have reviewed the signed & sealed design drawings provided to us for the above referenced project, prepared by EDA, and dated 10/28/16. I have reviewed the design from an engineering standpoint to provide the City of Alachua an independent civil engineering review. My review comments of the design are provided below.

General

1. The design drawings are well done and it is a very complete set of plans. My comments should most likely be straightforward for the design engineer to address.

Sht. C0.00

1. In the parking calculations under bicycle parking, adjust the number of required parking spaces to 9.4, not 94.
2. Please explain the inconsistency with the impervious area identified on this sheet (87,025 SF) vs. that identified in the stormwater report (71,956 SF). This is not a minor difference (0.35 acres) and should be adjusted. If the amount on the cover sheet is correct, then the stormwater calculations should be corrected and revised.

Sht. C0.10

1. Suggest adding abbreviations for your wall callout abbreviations TW & BW.

Sht. C0.20

1. This sheet shows the proposed Emerick Pediatric project which has a stormwater basin northwest of the project entrance. The topographic survey does not indicate this basin as existing. I suggest verifying that this basin does not discharge to the Holiday Inn site or cause additional offsite stormwater runoff to be directed to the Holiday Inn site.

Sht. C2.00

1. Be sure valley gutter is desired along NW 167th Blvd. @ the driveway connection. Where feasible it is desired to eliminate the valley gutter as a long term maintenance issue. I suggest eliminating it and detailing curb transitions as required.
2. Label the Type F Curb & Gutter at the driveway entrance and the valley gutter, if it remains.
3. Identify and label any spillout curb and transitions, if required.
4. Provide better spot grading at the driveway intersection to make sure the ADA ramps are constructed properly and the crosswalk cross-slope is not steeper than 2.0 %.
5. Make sure the crosswalk striping is striped from curb to curb.
6. Label the predominant curb within the parking lot as 6" standard curb (Typ.)
7. Provide better spot grading at the ADA parking spaces to assure they are constructed with max slope of 2.0% and the sidewalk transitions are constructed properly.
8. The retaining wall is provided with callouts referring to TW and BW. These terms are not defined in your legend and abbreviations and are not standard FDOT abbreviations. I assume TW is top of wall, which makes sense. I am unsure what BW stands for. If it stands for bottom of wall, what does that refer to? The "BW" elevations shown along the inside of the wall would not be the ground surface at these locations. Perhaps that would be the elevation of the wall at the top of the footing? Or maybe the bottom of the wall footing. Please provide a description. These BW elevations do not seem to follow a pattern so please verify they are accurately describing the wall design.
9. Is there a design detail for the retaining wall? What material is the wall supposed to be? Is it masonry or poured-in-place concrete? A note states it is to be designed by others. It is very important this wall is designed properly by a Florida Registered Structural Engineer PE. I suggest the design details for this wall be added to this plan set.
10. The 6" and 8" storm pipes discharging into S-1 and S-4 are labeled as RCP. RCP is not made in those sizes. Please revise to CPE or PVC or other acceptable pipe material.
11. Suggest showing the building roof storm drain discharge locations and their piping tie-ins to the storm sewer lines provided.
12. Spot Elevations should be provided on the exterior of the building to identify drainage patterns away from the building.
13. The pool area and sidewalk north of the pool area has very little grading. I suggest this be revised to include additional grading and to make sure storm water runoff from the north sidewalk flows to S-1. This sidewalk appears to be graded flat right now and this could cause drainage ponding.
14. The exterior sidewalk at the far northeast corner has 0.92' of fall across the corner. This may be a typo and seems to be a severe cross slope. Suggest revising it.
15. Provide spot grades for the bicycle parking pad.

16. The grading of the dumpster pad calls for a flush connection between pavement and the concrete pad, yet the detail on Sht. C2.10 shows a 6” step-up. Please correct one or the other. A-001 also shows details at the dumpster pad but it is unclear from those details whether or not the 6” step-up is provided or not.
17. ****THIS IS VERY IMPORTANT**** The geotechnical report indicates a very special manner in which the building shall be undercut and backfilled, and also identifies the need for an underdrain system to be provided around the building. Please provide a note referencing the building undercut per the Geotechnical report. Please also provide the design and details for the underdrain recommended in the report. The report indicates the north, west, and south side of the building should be provided with underdrain. This should be designed and the details added to the drawings.

Sht. C2.20

1. The Typical Basin Section A-A line that runs through the basin should be redrawn to be perpendicular to the basin sides slopes and to reach the pavement so it accurately identifies the location of the Section A-A drawn in the detail.
2. A note should be added in the basin plan view which identifies the location of the basin undercut limits per the GSE Geotechnical Report. These limits are to extend to the southeast of the basin to the elevation 98 contour and this is not depicted on the drawings.
3. Suggest relocating the silt fence shown so that it is beyond the limits of the basin back slope. This will allow the construction activity to be within the protected area. The silt fence should also be drawn beyond the rubble pad at MES-2 and all other construction work limits.
4. In the Section A-A detail the maintenance path is indicated to be 10:1 and the slope to tie back up to the parking lot is indicated to be 6:1. It is not designed that way in the proposed plan view contours. Please revise one or the other.
5. Suggest that the note in the Section A-A detail pointing to the undercut be expanded to identify the exact GSE Report which provides the undercut recommendations.
6. Please clarify on the basin Section A-A if the undercut on the side slopes is 12” thick.
7. Label the basin outfall detail S-12.
8. Suggest the S-12 detail profile views be labeled “Front View” and “Side View” or some other label like the upper detail is labeled “Plan View”. The right most view or “Side View” should be redrawn to match the left “Front View” in scale, so they make more sense next to each other. The side view is drawn much shorter than the front view and it does not present the detail well. It is also suggested that the basin bottom be shown on the front and side view.

Sht. C3.10

1. Suggest relocating the silt fence shown so that it is beyond the work limits of the basin back slope and other construction activity. This will allow the construction activity to be within the protected area. The silt fence should also be drawn beyond the rubble pad at MES-2.

Sht. C4.00

1. Provide callouts for the water main and fire line pipe fittings running through the project.
2. The note pointing to the fire hydrant includes a tap. This should include the 8” gate valve and the 8” bend but not a tap.

3. Does Note 1 of the Utility Notes apply?
4. Is the wastewater line lateral supposed to be 8” diameter? Usually these are more commonly 6” diameter. The slope of the wastewater lateral is 22.39%, which is severe. Perhaps the invert at the manhole can be raised or the cleanout invert lowered, or an outside drop provided to reduce this slope. Please coordinate with the City of Alachua Utilities Dept. to make sure they approve of this 8” lateral slope.
5. Suggest adding the electrical lighting locations to this drawing.
6. Where is the primary electric feed coming from? Should the primary electric lines feeding the transformer be shown on this drawing? It may be shown on a separate electrical plan, which is fine if coordinated properly.

I would also point out that I confined my review to the drawings and information I was provided. I did not review the stormwater report modeling and basin design since the project will go through a separate stormwater design review with SRWMD, and that would satisfy the City of Alachua stormwater concerns. If you would also like us to review the stormwater design on the City’s behalf, please let me know.

I will make myself available to City staff or the EDA project manager if there are any questions related to my comments or a desire to meet and review the comments in person. Please let me know if I can provide any other services related to this project.

Sincerely,

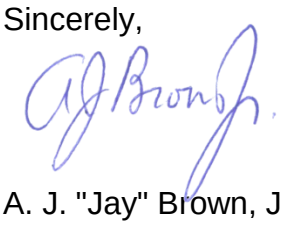

A. J. "Jay" Brown, Jr., PE
President, JBrown Professional Group Inc.

City of Alachua

TRACI L. GRESHAM
CITY MANAGER

PLANNING & COMMUNITY DEVELOPMENT
DIRECTOR KATHY WINBURN, AICP

November 3, 2016

Sergio Reyes, P.E.
eda engineers-surveyors-planners, inc.
2404 NW 43rd Street
Gainesville, FL 32606

Also submitted electronically to sreyes@edafl.com

RE: Completeness Review for Holiday Inn Alachua Site Plan and Lot Split Applications

Dear Mr. Reyes:

On October 31, 2016 the City of Alachua received your updated application for the approval of a Site Plan for the development located on NW 167th Boulevard (Tax Parcel 03053-001-001), consisting of a 58,821 square foot, 92 room hotel and all associated drainage, paving, grading, and utility infrastructure improvements on a 4.24 acre subject property.

According to Section 2.2.6 of the Land Development Regulations (LDRs), upon receipt of an application, a completeness review shall be conducted to determine that the application contains all the necessary information and materials, is in proper form and of sufficient detail, and is accompanied by the appropriate fee. The Planning Department has reviewed the aforementioned application for completeness and finds that the application is complete. Detailed comments will be provided at the Development Review Team (DRT), which will be scheduled separately.

It should be noted, the contents of the applications have not been thoroughly reviewed. An in-depth review of the content of the application will be performed subsequently and any issues with content will be addressed at DRT. The following comments originally found in the Completeness Review will be included with the DRT comments.

6. **Required Attachment 3**: Fire Department Access and Water Supply Plan.
   Action Needed to Address Deficiency: Please provide documentation from the local water purveyor (City of Alachua Public Services) verifying required flow can be provided at proposed development site.

Should you have any questions, please feel free to contact me at (386) 418-6100, ext. 108 or via email at ahall@cityofalachua.com.

Sincerely,

Adam Hall, AICP
Planner

c: Kathy Winburn, AICP, Planning Director
Justin Tabor, AICP, Principal Planner
File

City of Alachua

TRACI L. GRESHAM
CITY MANAGER

PLANNING & COMMUNITY DEVELOPMENT
DIRECTOR KATHY WINBURN, AICP

October 6, 2016

Sergio Reyes, P.E.
eda engineers-surveyors-planners, inc.
2404 NW 43rd Street
Gainesville, FL 32606

Also submitted electronically to sreyes@edafl.com

RE: Completeness Review for Holiday Inn Alachua Site Plan and Lot Split Applications

Dear Mr. Reyes:

On September 29, 2016 the City of Alachua received your application for the approval of a Site Plan for the development located on NW 167th Boulevard (Tax Parcel 03053-001-001), consisting of a 58,821 square foot, 92 room hotel and all associated drainage, paving, grading, and utility infrastructure improvements on a 4.24 acre subject property.

According to Section 2.2.6 of the Land Development Regulations (LDRs), upon receipt of an application, a completeness review shall be conducted to determine that the application contains all the necessary information and materials, is in proper form and of sufficient detail, and is accompanied by the appropriate fee. The Planning Department has reviewed the aforementioned application for completeness and finds that the following information is needed.

The comments below are based solely on a preliminary review of your application for completeness. Detailed comments will be provided at the Development Review Team (DRT) Meeting. A DRT Meeting will be scheduled upon satisfaction of the application's completeness review deficiencies, as indicated below.

Please address the following:

1. **Required Attachment D.1.c**: Vicinity map appears to call out different area of the City of Alachua.
   Action Needed to Address Deficiency: Confirm call out inset for vicinity map.

2. **Required Attachment D.1.k:** Required loading area(s) not depicted on site plan. Please see Section 6.1.5 of the City of Alachua Land Development Regulations for loading area requirements.
   Action Needed to Address Deficiency: Identify loading area(s) on site plan.

3. **Required Attachment D.1.n**: Rear required setback does not appear to meet requirement of Section 6.6.3 (B). Total number of parking spaces may be impacted by number of seats in meeting space.
   Action Needed to Address Deficiency: Section 6.6.3 applies to non-residential development located within 500 feet of residential development. Section 6.6.3 (B) requires that any non-residential structure be setback from the residential use boundary by a minimum distance equal to the height of the nonresidential structure. The minimum setback therefore from the rear property line would be the height of the proposed hotel- 47.5 feet. Please address. Additionally, per Table 6.1-1, parking spaces must be provided for uses accessory to the hotel, such as the conference meeting space. Further, if this increases the number of parking spaces to 100 or more, additional requirements may be required. Please see Section 6.1.10 of the City of Alachua Land Development Regulations.

4. **Required Attachment D.1.p**: Architectural plans must include glazing calculations for all facades facing existing residential uses, detail on the plans demonstrating compliance with façade massing requirements (Section 6.8.2 (A)(2)(b)), and must be in color.
   Action Needed to Address Deficiency: Amend architectural plans to provide glazing calculations for all facades facing residential uses (rear) in addition to the glazing calculations already provided for front façade. Provide detail or note demonstrating compliance with the massing requirements found in Section 6.8.2 (A)(2)(b). Provide physical copies of color architectural plans.

5. **Required Attachment D.1.r**: For development consisting of multi-family residential, hotel, or mobile home park, the following information is needed: tabulation of gross acreage, tabulation of density, number of dwelling units proposed, location and percent of total open space and recreation space, floor area of dwelling units, street layout, lay of mobile home stands, City of Alachua Public School Student Generation form.
   Action Needed to Address Deficiency: Please provide a note on plans indicating the square footage dedicated to accommodations and other areas in the proposed development. Provide total number of seats proposed in meeting/conference room area (per Table 6.1-1, parking spaces must be provided for uses accessory to the hotel). Provide a completed City of Alachua Public School Student Generation form.

6. **Required Attachment 3**: Fire Department Access and Water Supply Plan.
   Action Needed to Address Deficiency: Please provide documentation from the local water purveyor (City of Alachua Public Services) verifying required flow can be provided at proposed development site.

7. **Required Attachment 8**: Legal Description with Parcel Number.
   Action Needed to Address Deficiency: Submitted legal description on separate sheet does not include parcel number. Please address. This comment applies to both site plan application and lot split application.

8. **Additional Comments**: Please address the following issues:
    a. Submitted plans do not indicate location or arrangement of all mechanical equipment (HVAC, pool filtration equipment, etc). If located at the ground level, please provide screening location and detail. If located on roof of proposed structure, please provide a detailed roof plan demonstrating compliance with the screening requirements set forth in Section 6.8.2 (A) (3).
    b. Property is located with the US Highway 441/ Interstate 75 Gateway Overlay District. Please review plans for compliance with Section 3.7 (C), including building design and orientation standards.
    c. Site Photometric Plan: northwest property boundary photometric data is illegible. Cut sheets for proposed exterior lighting fixtures not provided.
    d. Landscaping plan: please provide design detail for the following: all fencing and retaining walls, and the dumpster enclosure.
    e. Please note that the proposed development is located within 500 feet of a residential district and subject to the residential protection standards set forth in Section 6.6.3. Additional conditions may be imposed to minimize adverse impacts to the residential areas. Please address Section 6.6.3 (A) 1- 12 particularly regarding the protection of privacy of adjacent residential uses and activities that may generate potential adverse impacts (such as noise from proposed pool area).

    Action Needed to Address Deficiency: Update site plan that addresses these comments.

It should be noted, the contents of the applications have not been thoroughly reviewed. An in-depth review of the content of the application will be performed subsequently and any issues with content will be addressed at DRT.

In accordance with Section 2.2.6(B) of the LDRs, the applicant must correct the deficiencies and resubmit the application for completeness determination. *The time frame and cycle for review shall be based upon the date the application is determined to be complete.* If the applicant fails to respond to the identified deficiencies within forty-five (45) calendar days, the applications shall be considered withdrawn.

Should you have any questions, please feel free to contact me at (386) 418-6100, ext. 108 or via email at ahall@cityofalachua.com.

Sincerely,

Adam Hall, AICP
Planner

c: Kathy Winburn, AICP, Planning Director
Justin Tabor, AICP, Principal Planner
File

Zimbra **ad_hall@cityofalachua.org**

Re: Completeness Review Comments for Holiday Inn Alachua

From : Adam Boukari <aboukari@cityofalachua.org>

Tue, Oct 11, 2016 01:48 PM

Holiday Inn Alachua

Subject : Re: Completeness Review Comments for Holiday Inn Alachua

To : Adam Hall <ad_hall@cityofalachua.org>

Thank you.

Adam Boukari
Assistant City Manager

City of Alachua
P.O. Box 9
Alachua, FL 32616

PH: (386) 418-6100
FX: (386) 418-6175

From: "Adam Hall" <ad_hall@cityofalachua.org>
To: "Adam Boukari" <ad_boukari@cityofalachua.org>
Sent: Tuesday, October 11, 2016 1:35:32 PM
Subject: Completeness Review Comments for Holiday Inn Alachua

Adam, See attached. Thank you!

--
Adam Hall, AICP | Planner | Office of Planning and Community Development
City of Alachua | ahall@cityofalachua.com | Phone: 386.418.6121 | Direct: 386.418.6125

From : Adam Hall <ad_hall@cityofalachua.org>

Tue, Oct 11, 2016 01:35 PM

Holiday Inn Alachua

1 attachment

Subject : Completeness Review Comments for Holiday Inn Alachua

To : Adam Boukari <ad_boukari@cityofalachua.org>

Adam, See attached. Thank you!

--

Adam Hall, AICP | Planner | Office of Planning and Community Development
City of Alachua | ahall@cityofalachua.com | Phone: 386.418.6121 | Direct: 386.418.6125

Completeness Review Letter- October 6, 2016.pdf
148 KB

RE: Holiday Inn Alachua Scheduled for January 10, 2017 PZB

From : Stephanie Sutton <ssutton@edafl.com>

Wed, Dec 21, 2016 11:51 AM

Holiday Inn Alachua

3 attachments

Subject : RE: Holiday Inn Alachua Scheduled for January 10, 2017 PZB

To : Adam Hall <ad_hall@cityofalachua.org>

Sorry about that – see attached

Stephanie Sutton
Project Manager
SSutton@edafl.com
eda engineers-surveyors-planners, inc.
2404 NW 43rd Street
Gainesville, FL 32606

(352) 373-3541
www.edafl.com

From: Adam Hall [mailto:ad_hall@cityofalachua.org]
Sent: Wednesday, December 21, 2016 11:43 AM
To: Stephanie Sutton <ssutton@edafl.com>
Subject: Re: Holiday Inn Alachua Scheduled for January 10, 2017 PZB

Stephanie, I only see the concurrency report , no retaining wall sheets.

Adam H

From: "Stephanie Sutton" <ssutton@edafl.com>
To: "Adam Hall" <ad_hall@cityofalachua.org>, "Sergio Reyes" <sreyes@edafl.com>
Sent: Wednesday, December 21, 2016 10:53:42 AM
Subject: RE: Holiday Inn Alachua Scheduled for January 10, 2017 PZB

Adam,

I've revised the concurrency report again- does this address your comments?
I've also attached the retaining wall detail sheets.

We'll include both of these items and an updated landscape plan in the final submittal.

Stephanie

Stephanie Sutton
Project Manager
SSutton@edafl.com
eda engineers-surveyors-planners, inc.

2404 NW 43rd Street
Gainesville, FL 32606
(352) 373-3541
www.edafl.com

From: Adam Hall [mailto:ad_hall@cityofalachua.org]
Sent: Tuesday, December 20, 2016 4:41 PM
To: Sergio Reyes <sreyes@edafl.com>
Cc: Stephanie Sutton <ssutton@edafl.com>
Subject: Holiday Inn Alachua Scheduled for January 10, 2017 PZB

Sergio,

Please see the attached letter regarding the Holiday Inn Alachua Site Plan application. Before preparing final submittal, also note the following:

- One of the recommended conditions relates to the granting of easements to the City for public utilities; please coordinate with the City of Alachua Compliance and Risk Management Office prior to recording any easements.
- The Public Services Department is still reviewing the latest submittal, a additional condition will be recommended that requires compliance with their comment letter. An updated comment letter will be issued prior to the hearing material submission deadline of December 28, 2016.
- The property must be posted with a Notice of Public Hearing sign by **December 21, 2016**. This sign is ready for pick up now. Please note that this deadline is tomorrow.
- There are several outstanding items that must be corrected prior to final submittal; failure to fully address these items may result in a postponement in the public hearing. If the public hearing is postponed, the applicant is responsible for all costs related to renoticing the hearing.
    - The square footage listed on the Floor to Area calculation does not match the square footage used for the concurrency calculations. Please rectify.
    - Referenced Sheet C701.1 not found although it is listed as being submitted in the cover letter for the December 19, 2016 submission.
    - The table numbers in the Concurrency Management report are still not coherent. While it is acceptable to use the City's data and table numbers from the Development Monitoring Report, the submitted concurrency management report uses both. This results in duplicated table numbers.
    - The landscaped plans have floating/ mislabeled trees on the southern property buffer area ('MG' and 'QV' are shown, but do not seem to have an associated tree proposed)

If you have any questions, or need anything else, please do not hesitate to contact me.

Thank you,

--
Adam Hall, AICP | Planner | Office of Planning and Community Development
City of Alachua | ahall@cityofalachua.com | Phone: 386.418.6121 | Direct: 386.418.6125

---

image002.jpg
7 KB

image003.jpg
7 KB

2016.12.02 - HIEX, Alachua, FL-SE- Retaining Wall.pdf
639 KB

From : Adam Hall <ad_hall@cityofalachua.org>
Subject : Re: Holiday Inn Alachua Scheduled for January 10, 2017 PZB
To : Stephanie Sutton <ssutton@edafl.com>

Wed, Dec 21, 2016 11:42 AM
Holiday Inn Alachua
1 attachment

Stephanie, I only see the concurrency report , no retaining wall sheets.

Adam H

From: "Stephanie Sutton" <ssutton@edafl.com>
To: "Adam Hall" <ad_hall@cityofalachua.org>, "Sergio Reyes" <sreyes@edafl.com>
Sent: Wednesday, December 21, 2016 10:53:42 AM
Subject: RE: Holiday Inn Alachua Scheduled for January 10, 2017 PZB

Adam,

I’ve revised the concurrency report again- does this address your comments?
I’ve also attached the retaining wall detail sheets.

We'll include both of these items and an updated landscape plan in the final submittal.

Stephanie

Stephanie Sutton
Project Manager
SSutton@edafl.com
eda engineers-surveyors-planners, inc.
2404 NW 43rd Street
Gainesville, FL 32606
(352) 373-3541
www.edafl.com

From: Adam Hall [mailto:ad_hall@cityofalachua.org]
Sent: Tuesday, December 20, 2016 4:41 PM
To: Sergio Reyes <sreyes@edafl.com>
Cc: Stephanie Sutton <ssutton@edafl.com>
Subject: Holiday Inn Alachua Scheduled for January 10, 2017 PZB

Sergio,

Please see the attached letter regarding the Holiday Inn Alachua Site Plan application. Before preparing final submittal, also note the following:

- One of the recommended conditions relates to the granting of easements to the City for public utilities; please coordinate with the City of Alachua Compliance and Risk Management Office prior to recording any easements.
- The Public Services Department is still reviewing the latest submittal, a additional condition will be recommended that requires compliance with their comment letter. An updated comment letter will be issued prior to the hearing material submission deadline of December 28, 2016.
- The property must be posted with a Notice of Public Hearing sign by **December 21, 2016**. This sign is ready for pick up now. Please note that this deadline is tomorrow.
- There are several outstanding items that must be corrected prior to final submittal; failure to fully address these items may result in a postponement in the public hearing. If the public hearing is postponed, the applicant is responsible for all costs related to renoticing the hearing.

- The square footage listed on the Floor to Area calculation does not match the square footage used for the concurrency calculations. Please rectify.
- Referenced Sheet C701.1 not found although it is listed as being submitted in the cover letter for the December 19, 2016 submission.
- The table numbers in the Concurrency Management report are still not coherent. While it is acceptable to use the City's data and table numbers from the Development Monitoring Report, the submitted concurrency management report uses both. This results in duplicated table numbers.
- The landscaped plans have floating/ mislabeled trees on the southern property buffer area ('MG' and 'QV' are shown, but do not seem to have an associated tree proposed)

If you have any questions, or need anything else, please do not hesitate to contact me.

Thank you,

--
Adam Hall, AICP | Planner | Office of Planning and Community Development
City of Alachua | ahall@cityofalachua.com | Phone: 386.418.6121 | Direct: 386.418.6125

---

image002.jpg
7 KB

From : Stephanie Sutton <ssutton@edafl.com>
Subject : RE: Holiday Inn Alachua Scheduled for January 10, 2017 PZB
To : Adam Hall <ad_hall@cityofalachua.org>, Sergio Reyes <sreyes@edafl.com>

Wed, Dec 21, 2016 10:53 AM
Holiday Inn Alachua
2 attachments

Adam,

I've revised the concurrency report again- does this address your comments?
I've also attached the retaining wall detail sheets.

We'll include both of these items and an updated landscape plan in the final submittal.

Stephanie

Stephanie Sutton
Project Manager
SSutton@edafl.com
eda engineers-surveyors-planners, inc.
2404 NW 43rd Street
Gainesville, FL 32606
(352) 373-3541
www.edafl.com

From: Adam Hall [mailto:ad_hall@cityofalachua.org]
Sent: Tuesday, December 20, 2016 4:41 PM
To: Sergio Reyes <sreyes@edafl.com>
Cc: Stephanie Sutton <ssutton@edafl.com>
Subject: Holiday Inn Alachua Scheduled for January 10, 2017 PZB

Sergio,

Please see the attached letter regarding the Holiday Inn Alachua Site Plan application. Before preparing final submittal, also note the following:

- One of the recommended conditions relates to the granting of easements to the City for public utilities; please coordinate with the City of Alachua Compliance and Risk Management Office prior to recording any easements.
- The Public Services Department is still reviewing the latest submittal, a additional condition will be recommended that requires compliance with their comment letter. An updated comment letter will be issued prior to the hearing material submission deadline of December 28, 2016.
- The property must be posted with a Notice of Public Hearing sign by **December 21, 2016**. This sign is ready for pick up now. Please note that this deadline is tomorrow.
- There are several outstanding items that must be corrected prior to final submittal; failure to fully address these items may result in a postponement in the public hearing. If the public hearing is postponed, the applicant is responsible for all costs related to renoticing the hearing.
    - The square footage listed on the Floor to Area calculation does not match the square footage used for the concurrency calculations. Please rectify.
    - Referenced Sheet C701.1 not found although it is listed as being submitted in the cover letter

for the December 19, 2016 submission.

- The table numbers in the Concurrency Management report are still not coherent. While it is acceptable to use the City's data and table numbers from the Development Monitoring Report, the submitted concurrency management report uses both. This results in duplicated table numbers.
- The landscaped plans have floating/ mislabeled trees on the southern property buffer area ('MG' and 'QV' are shown, but do not seem to have an associated tree proposed)

If you have any questions, or need anything else, please do not hesitate to contact me.

Thank you,

--
Adam Hall, AICP | Planner | Office of Planning and Community Development
City of Alachua | ahall@cityofalachua.com | Phone: 386.418.6121 | Direct: 386.418.6125

---

image002.jpg
7 KB

Holiday Inn Concurrency Impact Analysis.pdf
75 KB

From : Stephanie Sutton <ssutton@edafl.com>
Subject : RE: Holiday Inn Alachua Scheduled for January 10, 2017 PZB
To : Adam Hall <ad_hall@cityofalachua.org>
Cc : Sergio Reyes <sreyes@edafl.com>

Tue, Dec 20, 2016 04:43 PM
Holiday Inn Alachua
1 attachment

Thank you Adam- we'll take a look at these items and send Melissa from our office to pickup the signs and get them posted on the property tomorrow.

Stephanie

Stephanie Sutton
Project Manager
SSutton@edafl.com
eda engineers-surveyors-planners, inc.

2404 NW 43rd Street

December 21, 2016. This sign is ready for pick up now. Please note that this deadline is tomorrow.

- There are several outstanding items that must be corrected prior to final submittal; failure to fully address these items may result in a postponement in the public hearing. If the public hearing is postponed, the applicant is responsible for all costs related to renoticing the hearing.
  - The square footage listed on the Floor to Area calculation does not match the square footage used for the concurrency calculations. Please rectify.
  - Referenced Sheet C701.1 not found although it is listed as being submitted in the cover letter for the December 19, 2016 submission.
  - The table numbers in the Concurrency Management report are still not coherent. While it is acceptable to use the City's data and table numbers from the Development Monitoring Report, the submitted concurrency management report uses both. This results in duplicated table numbers.
  - The landscaped plans have floating/ mislabeled trees on the southern property buffer area ('MG' and 'QV' are shown, but do not seem to have an associated tree proposed)

If you have any questions, or need anything else, please do not hesitate to contact me.

Thank you,

--

Adam Hall, AICP | Planner | Office of Planning and Community Development
City of Alachua | ahall@cityofalachua.com | Phone: 386.418.6121 | Direct: 386.418.6125

Notice of Hearing Scheduled.pdf
81 KB

Holiday Inn P&Z schedule

From : Stephanie Sutton <ssutton@edafl.com>

Tue, Dec 20, 2016 04:24 PM

Holiday Inn Alachua

Subject : Holiday Inn P&Z schedule

1 attachment

To : Adam Hall <ad_hall@cityofalachua.org>

Cc : Sergio Reyes <sreyes@edafl.com>

Adam,

When do you expect to know if we will make the January P&Z board meeting? Please let us know so we can work on getting the final materials/plans signed and sealed ASAP as it will be harder to reach people around the holidays.

Thank you,

Stephanie

Stephanie Sutton
Project Manager
SSutton@edafl.com
eda engineers-surveyors-planners, inc.
2404 NW 43rd Street
Gainesville, FL 32606
(352) 373-3541
www.edafl.com

---

image001.jpg
9 KB

RE: Holiday Inn - 2nd Engineering Review

From : A. J. 'Jay' Brown, Jr., PE <jay.brown@jbprogroup.com>
Mon, Dec 19, 2016 10:04 PM

Subject : RE: Holiday Inn - 2nd Engineering Review
Holiday Inn Alachua
2 attachments

To : Adam Hall <ad_hall@cityofalachua.org>

You are welcome Adam. I am very happy to do these reviews for the City of Alachua. I hope my reviews prove helpful.
Jay

A. J. "Jay" Brown, Jr., P.E.
President

JBrown PROFESSIONAL GROUP
Civil Engineering • Land Surveying • Planning

www.JBProGroup.com

3530 NW 43rd Street · Gainesville, FL 32606
Office: (352) 375-8999 x102 · Fax: (352) 375-0833 · Mobile: (352) 318-9462

"Our services now include surveying. Please contact us for all of your surveying needs!"

From: Adam Hall [mailto:ad_hall@cityofalachua.org]
Sent: Monday, December 19, 2016 3:39 PM
To: A. J. 'Jay' Brown, Jr., PE
Subject: Re: Holiday Inn - 2nd Engineering Review

Jay,

Thank you for this, the applicant has been given a copy of these comments.

Adam H

From: "jay brown" <jay.brown@jbprogroup.com>
To: "ad hall" <ad_hall@cityofalachua.org>
Sent: Thursday, December 15, 2016 11:29:05 PM
Subject: Holiday Inn - 2nd Engineering Review

Adam,

Please find my 2nd round of review comments for the Holiday Inn project. EDA whittled down the comments a good bit, but I still have a few that I think should be addressed. My letter is attached.
Jay

A. J. "Jay" Brown, Jr., P.E.
President

JBrown PROFESSIONAL GROUP
Civil Engineering • Land Surveying • Planning

www.JBProGroup.com

3530 NW 43rd Street · Gainesville, FL 32606
Office: (352) 375-8999 x102 · Fax: (352) 375-0833 · Mobile: (352) 318-9462

"Our services now include surveying. Please contact us for all of your surveying needs!"

---

image003.png
34 KB

image004.png
34 KB

From : Adam Hall <ad_hall@cityofalachua.org>

Mon, Dec 19, 2016 03:36 PM

Holiday Inn Alachua

1 attachment

Subject : Re: Holiday Inn - 2nd Engineering Review

To : jay brown <jay.brown@jbprogroup.com>

Jay,

Thank you for this, the applicant has been given a copy of these comments.

Adam H

From: "jay brown" <jay.brown@jbprogroup.com>
To: "ad hall" <ad_hall@cityofalachua.org>
Sent: Thursday, December 15, 2016 11:29:05 PM
Subject: Holiday Inn - 2nd Engineering Review

Adam,

Please find my 2nd round of review comments for the Holiday Inn project. EDA whittled down the comments a good bit, but I still have a few that I think should be addressed. My letter is attached.
Jay

A. J. "Jay" Brown, Jr., P.E.
President

JBrown PROFESSIONAL GROUP
Civil Engineering • Land Surveying • Planning

www.JBProGroup.com

3530 NW 43rd Street · Gainesville, FL 32606
Office: (352) 375-8999 x102 · Fax: (352) 375-0833 · Mobile: (352) 318-9462

"Our services now include surveying. Please contact us for all of your surveying needs!"

image003.png
34 KB

From : A. J. 'Jay' Brown, Jr., PE <jay.brown@jbprogroup.com>
Thu, Dec 15, 2016 11:29 PM
Holiday Inn Alachua
2 attachments

Subject : Holiday Inn - 2nd Engineering Review

To : ad hall <ad_hall@cityofalachua.org>

Adam,

Please find my 2nd round of review comments for the Holiday Inn project. EDA whittled down the comments a good bit, but I still have a few that I think should be addressed. My letter is attached.
Jay

A. J. "Jay" Brown, Jr., P.E.
President

JBrown PROFESSIONAL GROUP
Civil Engineering • Land Surveying • Planning

www.JBProGroup.com

3530 NW 43rd Street · Gainesville, FL 32606
Office: (352) 375-8999 x102 · Fax: (352) 375-0833 · Mobile: (352) 318-9462

"Our services now include surveying. Please contact us for all of your surveying needs!"

image003.png
34 KB

JBPro - Review Comment Letter - Holiday Inn 12-15-16.pdf
205 KB

RE: Holiday Inn

From : Stephanie Sutton <ssutton@edafl.com> Wed, Dec 14, 2016 10:20 AM
1 attachment
Subject : RE: Holiday Inn
To : Adam Hall <ad_hall@cityofalachua.org>

Thanks Adam- that should be easy for us to address.

Stephanie Sutton
Project Manager
SSutton@edafl.com
eda engineers-surveyors-planners, inc.
2404 NW 43rd Street
Gainesville, FL 32606
(352) 373-3541
www.edafl.com

From: Adam Hall [mailto:ad_hall@cityofalachua.org]
Sent: Wednesday, December 14, 2016 9:32 AM
To: Stephanie Sutton <ssutton@edafl.com>
Subject: Re: Holiday Inn

Stephanie,

I am attaching the comments from Public Services. It appears that there is one issue with a manhole.

Adam Hall
City of Alachua

From: "Adam Hall" <ad_hall@cityofalachua.org>
To: "Stephanie Sutton" <ssutton@edafl.com>
Sent: Tuesday, December 13, 2016 11:04:20 AM
Subject: Holiday Inn

Stephanie,

Per my review so far, the following DRT comments have not been addressed:

1. FLUM Policy 1.3.d.9 has not been addressed in the Comp Plan consistency analysis portion of the application. DRT Comment A.2.
2. The Concurrency Impact Analysis has not been updated. DRT Comment B.1.
3. The demarcated pedestrian connection between the parking areas and entrance to the building should connect with pedestrian facilities proposed (sidewalk that runs through parking lot). DRT Comment C.2.b.
4. Pool equipment has been added to landscape plan, but no screening is shown. Must be screened with wood, masonry, stone, or finished metal or screened with landscaping. DRT comment C.3.j.
5. General landscape comment: the proposed tree counts appear to be slightly off, please verify. Counted trees on site plan meet all landscape requirements, other than those addressed in this email.
6 . Retaining wall details/ specs not found in resubmittal. DRT comment C.4.
7. No additional row of understory trees along rear property line show in plans as discussed at DRT and as noted in DRT comment C.6.a.i.
8. Color architectural plans not submitted (will be required at final submittal).
9. Calculation of floor to area ratio does not appear to match proposed square footage and lot size. Please verify and/or show calculation of floor to area ratio.

I have not yet received comments from outside engineering review, Public Services, or Building and Fire. These comments should be submitted to me by Thursday.

If you have any questions or wish to discuss further, please let me know.

Thanks,

--
Adam Hall, AICP | Planner | Office of Planning and Community Development
City of Alachua | ahall@cityofalachua.com | Phone: 386.418.6121 | Direct: 386.418.6125

---

image002.jpg
7 KB

From : Adam Hall <ad_hall@cityofalachua.org>
Subject : Re: Holiday Inn
To : Stephanie Sutton <ssutton@edafl.com>

Wed, Dec 14, 2016 09:31 AM
Holiday Inn Alachua
1 attachment

Stephanie,

I am attaching the comments from Public Services. It appears that there is one issue with a manhole.

Adam Hall
City of Alachua

From: "Adam Hall" <ad_hall@cityofalachua.org>
To: "Stephanie Sutton" <ssutton@edafl.com>
Sent: Tuesday, December 13, 2016 11:04:20 AM
Subject: Holiday Inn

Stephanie,

Per my review so far, the following DRT comments have not been addressed:

1. FLUM Policy 1.3.d.9 has not been addressed in the Comp Plan consistency analysis portion of the application. DRT Comment A.2.
2. The Concurrency Impact Analysis has not been updated. DRT Comment B.1.
3. The demarcated pedestrian connection between the parking areas and entrance to the building should connect with pedestrian facilities

proposed (sidewalk that runs through parking lot). DRT Comment C.2.b.
4. Pool equipment has been added to landscape plan, but no screening is shown. Must be screened with wood, masonry, stone, or finished metal or screened with landscaping. DRT comment C.3.j.
5. General landscape comment: the proposed tree counts appear to be slightly off, please verify. Counted trees on site plan meet all landscape requirements, other than those addressed in this email.
6 . Retaining wall details/ specs not found in resubmittal. DRT comment C.4.
7. No additional row of understory trees along rear property line show in plans as discussed at DRT and as noted in DRT comment C.6.a.i.
8. Color architectural plans not submitted (will be required at final submittal).
9. Calculation of floor to area ratio does not appear to match proposed square footage and lot size. Please verify and/or show calculation of floor to area ratio.

I have not yet received comments from outside engineering review, Public Services, or Building and Fire. These comments should be submitted to me by Thursday.

If you have any questions or wish to discuss further, please let me know.

Thanks,

--
Adam Hall, AICP | Planner | Office of Planning and Community Development
City of Alachua | ahall@cityofalachua.com | Phone: 386.418.6121 | Direct: 386.418.6125

12_14_1609_04_28.pdf
66 KB

From : Adam Hall Tue, Dec 13, 2016 11:04 AM

If you have any questions or wish to discuss further, please let me know.

Thanks,

--
Adam Hall, AICP | Planner | Office of Planning and Community Development
City of Alachua | ahall@cityofalachua.com | Phone: 386.418.6121 | Direct: 386.418.6125

Fwd: Holiday Inn - City of Alachua

From : Adam Hall <ad_hall@cityofalachua.org> Wed, Nov 30, 2016 11:04 AM
4 attachments
Subject : Fwd: Holiday Inn - City of Alachua
To : Meagan Dickey <mdickey@edafl.com>
Cc : Sergio Reyes <sreyes@edafl.com>, Rodolfo Valladares <ro_valladares@cityofalachua.org>

Meagan,

Please see clarifications from Public Services below regarding their DRT comments. Together with a previously sent email, I believe we have provided answers to all questions raised at DRT.

If that is not the case, or if you have any other questions, please let me know. Also, to let you know- I have spoken with Nate with the architecture team, but have not been contacted by anyone with Zamia. As a reminder, we are closed on Fridays.

Thank you!

Adam Hall

From: "Rodolfo Valladares" <ro_valladares@cityofalachua.org>
To: "Adam Hall" <ad_hall@cityofalachua.org>
Sent: Wednesday, November 30, 2016 10:53:27 AM
Subject: Re: Holiday Inn - City of Alachua

Mr. Adam Hall,

Pursuant to the inquiry below, the following provides response to Comments 1 & 2.

- Comment 1. Electrical service to the proposed building. The comments indicated that the service will be done along the east property line. We requested clarification if there are service connection along NW 167th Blvd, as provided to all the other developments fronting this road, Public Services to clarify.
  Response: Electrical underground service to the propose building shall be done along the east property line as noted in Public Services comment #3.

- Comment 2. Water tap(s) to serve the project for potable water, fire hydrant, fire connection and irrigation system. Comment was made the only one tap should be proposed to serve this facility. Clarification was requested if that is correct or as prior projects, individual taps were requested and approved for fire services, fire hydrant and potable and irrigation meter. Please clarify how many water taps are required to serve this project.
  Response: In reference to the proposed water tap(s) to service the project, Public Services Department has no noted issues with a single tap. However, keep in mind, Engineer is responsible to provide a design in accordance with standards and codes that facilitates the requirement within their design. Engineer is responsible for their design.

Additionally, attached is the word document of Public Services' review

comments.

Regards,

Rodolfo Valladares, P.E.
Public Service Director
City of Alachua
386.418.6140

From: "Adam Hall" <ad_hall@cityofalachua.org>
To: "Rodolfo Valladares" <ro_valladares@cityofalachua.org>
Sent: Wednesday, November 30, 2016 9:00:54 AM
Subject: Fwd: Holiday Inn - City of Alachua

Rodolfo, I hadn't thought of it this morning, but looking at the calendar- the deadline for eda to respond to us in order to keep them on schedule for a January planning board meeting is next Monday, December 5. I thought there might have been another week between, so they are looking to get our answers, update their plans, and resubmit back to us on Monday.

Adam H

From: "Meagan Dickey" <mdickey@edafl.com>
To: "Adam Hall" <ad_hall@cityofalachua.org>, "Sergio Reyes" <sreyes@edafl.com>
Cc: "Rodolfo Valladares" <ro_valladares@cityofalachua.org>, "Adam Boukari@cityofalachua.com" <aboukari@cityofalachua.com>, "Randy Gibbons" <rgibbons@mphhotels.com>, "Stephanie Sutton" <ssutton@edafl.com>, "Kathy Winburn" <ka_winburn@cityofalachua.org>
Sent: Tuesday, November 29, 2016 4:06:25 PM

Subject: RE: Holiday Inn - City of Alachua

Rodolfo,

Any update on items 1 and 2?

Thank you,

Meagan Dickey, E.I.
Project Designer
MDickey@edafl.com
eda engineers-surveyors-planners, inc.
2404 NW 43rd Street
Gainesville, FL 32606
(352) 373-3541
www.edafl.com

From: Adam Hall [mailto:ad_hall@cityofalachua.org]
Sent: Wednesday, November 23, 2016 2:47 PM
To: Sergio Reyes <sreyes@edafl.com>
Cc: Rodolfo Valladares <ro_valladares@cityofalachua.org>; Adam Boukari@cityofalachua.com <aboukari@cityofalachua.com>; Randy Gibbons <rgibbons@mphhotels.com>; Meagan Dickey <mdickey@edafl.com>; Stephanie Sutton <ssutton@edafl.com>; Kathy Winburn <ka_winburn@cityofalachua.org>
Subject: Re: Holiday Inn - City of Alachua

Sergio,

Please see responses to Questions 3 and 4 below. Public Services will forward their responses when completed.

3. Location of Fire Hydrant- No tree intended to be a mitigation tree shall be planted within ten feet of a fire hydrant; trees whose roots are known to damage public utilities shall not be planted within fifteen

feet of a public utility line (Section 6.2.1 (4)(h)). Perimeter buffer, and parking lot buffer/parking lot interior landscape have no listed setbacks from utility lines or fire hydrants. For this reason, unless the trees to the north of the access road become mitigation trees then I do not see a reason why the hydrant could not be located on the north side of the access point. Public Services requires separation minimums from utility lines and trees, but perimeter buffering still would be required. Use of tree preservation credits may be useful in meeting the required buffering requirements while at the same time meeting separation from utility lines required by public services.

4. 6' Privacy fence on east side of property- The height is permitted by Section 6.3, but would not completely satisfy the requirements of Section 6.2.2(D)(2)(b)iv. A continuous row of shrubs along the eastern perimeter of the parking lot area would be required, but the fencing may be used to satisfy up to 50% of that buffer requirement. Required fencing along north property line- after discussing this issue, the proposed 6' privacy fence along the rear property line, in conjunction with all other residential protection conditions will be satisfactory.

If you have any questions, or need further clarification then please do not hesitate to contact me.

Thank you,

Adam Hall
Planner
City of Alachua

From: "Sergio Reyes" <sreyes@edafl.com>
To: "Adam Hall" <ad_hall@cityofalachua.org>, "Rodolfo Valladares" <ro_valladares@cityofalachua.org>
Cc: "Adam Boukari@cityofalachua.com" <aboukari@cityofalachua.com>, "Randy Gibbons" <rgibbons@mphhotels.com>, "Meagan Dickey" <mdickey@edafl.com>, "Stephanie Sutton" <ssutton@edafl.com>
Sent: Tuesday, November 22, 2016 1:31:06 PM
Subject: Holiday Inn - City of Alachua

All:

Thanks for meeting with us yesterday for the DRT meeting.

As discussed yesterday, we still have some items that we need clarification for the resubmittal of the revised plans:

1. Electrical service to the proposed building. The comments indicated that the service will be done along the east property line. We

requested clarification if there are service connection along NW 167th Blvd, as provided to all the other developments fronting this road, Public Services to clarify.

2. Water tap(s) to serve the project for potable water, fire hydrant, fire connection and irrigation system. Comment was made the only one tap should be proposed to serve this facility. Clarification was requested if that is correct or as prior projects, individual taps were requested and approved for fire services, fire hydrant and potable and irrigation meter. Please clarify how many water taps are required to serve this project.
3. Location of the proposed Fire Hydrant; The proposed fire hydrant crosses a the driving lane (pavement). A comment was made to move the water line feeding the fire hydrant away from the pavement. Only place to located the Fire hydrant and accomplished this will be within the proposed buffer. Please clarify if this is acceptable or we will keep the fire hydrant at the current proposed location
4. Hight of the proposed fence. We are proposing a 6 ft. privacy fence along the north, east (partial) and west property lines. Please clarify is 6 ft. is acceptable or 8 ft. will be required per your comments.

Let me know if we missed any additional information that we will need to respond.

Thanks

Sergio Reyes, P.E.
President
SReyes@edafl.com
eda engineers-surveyors-planners, inc.
2404 NW 43rd Street
Gainesville, FL 32606
(352) 373-3541
www.edafl.com

Seal.png
67 KB

image003.jpg
7 KB

image002.jpg
7 KB

Holiday Inn Comments.doc
2 MB

From : Rodolfo Valladares <ro_valladares@cityofalachua.org> Wed, Nov 30, 2016 10:53 AM
4 attachments

Subject : Re: Holiday Inn - City of Alachua

To : Adam Hall <ad_hall@cityofalachua.org>

Mr. Adam Hall,

Pursuant to the inquiry below, the following provides response to Comments 1 & 2.

- Comment 1. Electrical service to the proposed building. The comments indicated that the service will be done along the east property line. We requested clarification if there are service connection along NW 167th Blvd, as provided to all the other

developments fronting this road, Public Services to clarify.
Response: Electrical underground service to the propose building shall be done along the east property line as noted in Public Services comment #3.

- Comment 2. Water tap(s) to serve the project for potable water, fire hydrant, fire connection and irrigation system. Comment was made the only one tap should be proposed to serve this facility. Clarification was requested if that is correct or as prior projects, individual taps were requested and approved for fire services, fire hydrant and potable and irrigation meter. Please clarify how many water taps are required to serve this project.
  Response: In reference to the proposed water tap(s) to service the project, Public Services Department has no noted issues with a single tap. However, keep in mind, Engineer is responsible to provide a design in accordance with standards and codes that facilitates the requirement within their design. Engineer is responsible for their design.

Additionally, attached is the word document of Public Services' review comments.

Regards,

Rodolfo Valladares, P.E.
Public Service Director
City of Alachua
386.418.6140

From: "Adam Hall" <ad_hall@cityofalachua.org>
To: "Rodolfo Valladares" <ro_valladares@cityofalachua.org>
Sent: Wednesday, November 30, 2016 9:00:54 AM
Subject: Fwd: Holiday Inn - City of Alachua

Rodolfo, I hadn't thought of it this morning, but looking at the calendar- the deadline for eda to respond to us in order to keep them on schedule for a January planning board meeting is next Monday, December 5. I thought there might have been another week between, so they are looking to get our answers, update their plans, and resubmit back to us on Monday.

Adam H

From: "Meagan Dickey" <mdickey@edafl.com>
To: "Adam Hall" <ad_hall@cityofalachua.org>, "Sergio Reyes" <sreyes@edafl.com>
Cc: "Rodolfo Valladares" <ro_valladares@cityofalachua.org>, "Adam Boukari@cityofalachua.com" <aboukari@cityofalachua.com>, "Randy Gibbons" <rgibbons@mphhotels.com>, "Stephanie Sutton" <ssutton@edafl.com>, "Kathy Winburn" <ka_winburn@cityofalachua.org>
Sent: Tuesday, November 29, 2016 4:06:25 PM
Subject: RE: Holiday Inn - City of Alachua

Rodolfo,

Any update on items 1 and 2?

Thank you,

Meagan Dickey, E.I.
Project Designer
MDickey@edafl.com
eda engineers-surveyors-planners, inc.
2404 NW 43rd Street
Gainesville, FL 32606
(352) 373-3541
www.edafl.com

From: Adam Hall [mailto:ad_hall@cityofalachua.org]
Sent: Wednesday, November 23, 2016 2:47 PM
To: Sergio Reyes <sreyes@edafl.com>
Cc: Rodolfo Valladares <ro_valladares@cityofalachua.org>; Adam Boukari@cityofalachua.com <aboukari@cityofalachua.com>; Randy Gibbons <rgibbons@mphhotels.com>; Meagan Dickey <mdickey@edafl.com>; Stephanie Sutton <ssutton@edafl.com>; Kathy Winburn <ka_winburn@cityofalachua.org>
Subject: Re: Holiday Inn - City of Alachua

Sergio,

Please see responses to Questions 3 and 4 below. Public Services will forward their responses when completed.

3. Location of Fire Hydrant- No tree intended to be a mitigation tree shall be planted within ten feet of a fire hydrant; trees whose roots are known to damage public utilities shall not be planted within fifteen feet of a public utility line (Section 6.2.1 (4)(h)). Perimeter buffer, and parking lot buffer/parking lot interior landscape have no listed setbacks from utility lines or fire hydrants. For this reason, unless the trees to the north of the access road become mitigation trees then I do not see a reason why the hydrant could not be located on the north side of the access point. Public Services requires separation minimums from utility lines and trees, but perimeter buffering still would be required. Use of tree preservation credits may be useful in meeting the required buffering requirements while at the same time meeting separation from utility lines required by public services.

4. 6' Privacy fence on east side of property- The height is permitted by Section 6.3, but would not completely satisfy the requirements of Section 6.2.2(D)(2)(b)iv. A continuous row of shrubs along the eastern perimeter of the parking lot area would be required, but the fencing may be used to satisfy up to 50% of that buffer requirement. Required fencing along north property line- after discussing this issue, the proposed 6' privacy fence along the rear property line, in conjunction with all other residential protection conditions will be satisfactory.

If you have any questions, or need further clarification then please do not hesitate to contact me.

Thank you,

Adam Hall
Planner

City of Alachua

From: "Sergio Reyes" <sreyes@edafl.com>
To: "Adam Hall" <ad_hall@cityofalachua.org>, "Rodolfo Valladares" <ro_valladares@cityofalachua.org>
Cc: "Adam Boukari@cityofalachua.com" <aboukari@cityofalachua.com>, "Randy Gibbons" <rgibbons@mphhotels.com>, "Meagan Dickey" <mdickey@edafl.com>, "Stephanie Sutton" <ssutton@edafl.com>
Sent: Tuesday, November 22, 2016 1:31:06 PM
Subject: Holiday Inn - City of Alachua

All:

Thanks for meeting with us yesterday for the DRT meeting.

As discussed yesterday, we still have some items that we need clarification for the resubmittal of the revised plans:

1. Electrical service to the proposed building. The comments indicated that the service will be done along the east property line. We requested clarification if there are service connection along NW 167th Blvd, as provided to all the other developments fronting this road, Public Services to clarify.
2. Water tap(s) to serve the project for potable water, fire hydrant, fire connection and irrigation system. Comment was made the only one tap should be proposed to serve this facility. Clarification was requested if that is correct or as prior projects, individual taps were requested and approved for fire services, fire hydrant and potable and irrigation meter. Please clarify how many water taps are required to serve this project.
3. Location of the proposed Fire Hydrant; The proposed fire hydrant crosses a the driving lane (pavement). A comment was made to move the water line feeding the fire hydrant away from the pavement. Only place to located the Fire hydrant and accomplished this will be within the proposed buffer. Please clarify if this is acceptable or we will keep the fire hydrant at the current proposed

location

4. Hight of the proposed fence. We are proposing a 6 ft. privacy fence along the north, east (partial) and west property lines. Please clarify is 6 ft. is acceptable or 8 ft. will be required per your comments.

Let me know if we missed any additional information that we will need to respond.

Thanks

Sergio Reyes, P.E.
President
SReyes@edafl.com
eda engineers-surveyors-planners, inc.
2404 NW 43rd Street
Gainesville, FL 32606
(352) 373-3541
www.edafl.com

---

image003.jpg
7 KB

image002.jpg
7 KB

Seal.png
67 KB

Holiday Inn Comments.doc

2 MB

From : Adam Hall <ad_hall@cityofalachua.org> Wed, Nov 30, 2016 09:00 AM

2 attachments

Subject : Fwd: Holiday Inn - City of Alachua

To : Rodolfo Valladares <ro_valladares@cityofalachua.org>

Rodolfo, I hadn't thought of it this morning, but looking at the calendar- the deadline for eda to respond to us in order to keep them on schedule for a January planning board meeting is next Monday, December 5. I thought there might have been another week between, so they are looking to get our answers, update their plans, and resubmit back to us on Monday.

Adam H

From: "Meagan Dickey" <mdickey@edafl.com>
To: "Adam Hall" <ad_hall@cityofalachua.org>, "Sergio Reyes" <sreyes@edafl.com>
Cc: "Rodolfo Valladares" <ro_valladares@cityofalachua.org>, "Adam Boukari@cityofalachua.com" <aboukari@cityofalachua.com>, "Randy Gibbons" <rgibbons@mphhotels.com>, "Stephanie Sutton" <ssutton@edafl.com>, "Kathy Winburn" <ka_winburn@cityofalachua.org>
Sent: Tuesday, November 29, 2016 4:06:25 PM
Subject: RE: Holiday Inn - City of Alachua

Rodolfo,

Any update on items 1 and 2?

Thank you,

50% of that buffer requirement. Required fencing along north property line- after discussing this issue, the proposed 6' privacy fence along the rear property line, in conjunction with all other residential protection conditions will be satisfactory.

If you have any questions, or need further clarification then please do not hesitate to contact me.

Thank you,

Adam Hall
Planner
City of Alachua

From: "Sergio Reyes" <sreyes@edafl.com>
To: "Adam Hall" <ad_hall@cityofalachua.org>, "Rodolfo Valladares" <ro_valladares@cityofalachua.org>
Cc: "Adam Boukari@cityofalachua.com" <aboukari@cityofalachua.com>, "Randy Gibbons" <rgibbons@mphhotels.com>, "Meagan Dickey" <mdickey@edafl.com>, "Stephanie Sutton" <ssutton@edafl.com>
Sent: Tuesday, November 22, 2016 1:31:06 PM
Subject: Holiday Inn - City of Alachua

All:

Thanks for meeting with us yesterday for the DRT meeting.

As discussed yesterday, we still have some items that we need clarification for the resubmittal of the revised plans:

1. Electrical service to the proposed building. The comments indicated that the service will be done along the east property line. We requested clarification if there are service connection along NW 167th Blvd, as provided to all the other developments fronting this road, Public Services to clarify.
2. Water tap(s) to serve the project for potable water, fire hydrant, fire connection and irrigation system. Comment was made the only one tap should be proposed to serve this facility. Clarification was requested if that is correct or as prior projects, individual taps were requested and approved for fire services, fire hydrant and potable

and irrigation meter. Please clarify how many water taps are required to serve this project.

3. Location of the proposed Fire Hydrant; The proposed fire hydrant crosses a the driving lane (pavement). A comment was made to move the water line feeding the fire hydrant away from the pavement. Only place to located the Fire hydrant and accomplished this will be within the proposed buffer. Please clarify if this is acceptable or we will keep the fire hydrant at the current proposed location
4. Hight of the proposed fence. We are proposing a 6 ft. privacy fence along the north, east (partial) and west property lines. Please clarify is 6 ft. is acceptable or 8 ft. will be required per your comments.

Let me know if we missed any additional information that we will need to respond.

Thanks

Sergio Reyes, P.E.
President
SReyes@edafl.com
eda engineers-surveyors-planners, inc.
2404 NW 43rd Street
Gainesville, FL 32606
(352) 373-3541
www.edafl.com

---

image003.jpg
7 KB

image002.jpg
7 KB

From : Meagan Dickey <mdickey@edafl.com> Tue, Nov 29, 2016 04:06 PM
2 attachments

Subject : RE: Holiday Inn - City of Alachua

To : Adam Hall <ad_hall@cityofalachua.org>, Sergio Reyes <sreyes@edafl.com>

Cc : Rodolfo Valladares <ro_valladares@cityofalachua.org>, Adam Boukari@cityofalachua.com <aboukari@cityofalachua.com>, Randy Gibbons <rgibbons@mphhotels.com>, Stephanie Sutton <ssutton@edafl.com>, Kathy Winburn <ka_winburn@cityofalachua.org>

Rodolfo,

Any update on items 1 and 2?

Thank you,

Meagan Dickey, E.I.
Project Designer
MDickey@edafl.com
eda engineers-surveyors-planners, inc.
2404 NW 43rd Street
Gainesville, FL 32606
(352) 373-3541
www.edafl.com

From: Adam Hall [mailto:ad_hall@cityofalachua.org]
Sent: Wednesday, November 23, 2016 2:47 PM
To: Sergio Reyes <sreyes@edafl.com>
Cc: Rodolfo Valladares <ro_valladares@cityofalachua.org>; Adam Boukari@cityofalachua.com <aboukari@cityofalachua.com>; Randy Gibbons <rgibbons@mphhotels.com>; Meagan Dickey <mdickey@edafl.com>; Stephanie Sutton <ssutton@edafl.com>; Kathy Winburn <ka_winburn@cityofalachua.org>
Subject: Re: Holiday Inn - City of Alachua

Sergio,

Please see responses to Questions 3 and 4 below. Public Services will forward their responses when completed.

3. Location of Fire Hydrant- No tree intended to be a mitigation tree shall be planted within ten feet of a fire hydrant; trees whose roots are known to damage public utilities shall not be planted within fifteen feet of a public utility line (Section 6.2.1 (4)(h)). Perimeter buffer, and parking lot buffer/parking lot interior landscape have no listed setbacks from utility lines or fire hydrants. For this reason, unless the trees to the north of the access road become mitigation trees then I do not see a reason why the hydrant could not be located on the north side of the access point. Public Services requires separation minimums from utility lines and trees, but perimeter buffering still would be required. Use of tree preservation credits may be useful in meeting the required buffering requirements while at the same time meeting separation from utility lines required by public services.

4. 6' Privacy fence on east side of property- The height is permitted by Section 6.3, but would not completely satisfy the requirements of Section 6.2.2(D)(2)(b)iv. A continuous row of shrubs along the eastern perimeter of the parking lot area would be required, but the fencing may be used to satisfy up to 50% of that buffer requirement. Required fencing along north property line- after discussing this issue, the proposed 6' privacy fence along the rear property line, in conjunction with all other residential protection conditions will be satisfactory.

If you have any questions, or need further clarification then please do not hesitate to contact me.

Thank you,

Adam Hall
Planner

City of Alachua

From: "Sergio Reyes" <sreyes@edafl.com>
To: "Adam Hall" <ad_hall@cityofalachua.org>, "Rodolfo Valladares" <ro_valladares@cityofalachua.org>
Cc: "Adam Boukari@cityofalachua.com" <aboukari@cityofalachua.com>, "Randy Gibbons" <rgibbons@mphhotels.com>, "Meagan Dickey" <mdickey@edafl.com>, "Stephanie Sutton" <ssutton@edafl.com>
Sent: Tuesday, November 22, 2016 1:31:06 PM
Subject: Holiday Inn - City of Alachua

All:

Thanks for meeting with us yesterday for the DRT meeting.

As discussed yesterday, we still have some items that we need clarification for the resubmittal of the revised plans:

1. Electrical service to the proposed building. The comments indicated that the service will be done along the east property line. We requested clarification if there are service connection along NW 167th Blvd, as provided to all the other developments fronting this road, Public Services to clarify.
2. Water tap(s) to serve the project for potable water, fire hydrant, fire connection and irrigation system. Comment was made the only one tap should be proposed to serve this facility. Clarification was requested if that is correct or as prior projects, individual taps were requested and approved for fire services, fire hydrant and potable and irrigation meter. Please clarify how many water taps are required to serve this project.
3. Location of the proposed Fire Hydrant; The proposed fire hydrant crosses a the driving lane (pavement). A comment was made to move the water line feeding the fire hydrant away from the pavement. Only place to located the Fire hydrant and accomplished this will be within the proposed buffer. Please clarify if this is acceptable or we will keep the fire hydrant at the current proposed

location

4. Hight of the proposed fence. We are proposing a 6 ft. privacy fence along the north, east (partial) and west property lines. Please clarify is 6 ft. is acceptable or 8 ft. will be required per your comments.

Let me know if we missed any additional information that we will need to respond.

Thanks

Sergio Reyes, P.E.
President
SReyes@edafl.com
eda engineers-surveyors-planners, inc.
2404 NW 43rd Street
Gainesville, FL 32606
(352) 373-3541
www.edafl.com

---

image002.jpg
7 KB

image003.jpg
7 KB

From : Sergio Reyes <sreyes@edafl.com> Wed, Nov 23, 2016 05:29 PM
Subject : RE: Holiday Inn - City of Alachua Holiday Inn Alachua
To : Adam Hall <ad_hall@cityofalachua.org> 3 attachments

Adam:

Ok Thanks.

Happy Thanksgiving

Sergio Reyes, P.E.
President
SReyes@edafl.com
eda engineers-surveyors-planners, inc.
2404 NW 43rd Street
Gainesville, FL 32606
(352) 373-3541
www.edafl.com

From: Adam Hall [mailto:ad_hall@cityofalachua.org]
Sent: Wednesday, November 23, 2016 5:27 PM
To: Sergio Reyes <sreyes@edafl.com>
Subject: Re: Holiday Inn - City of Alachua

Sergio,

I would assume Monday since that is when Rodolfo will be back in. I know they were working on a response, but since I will not be in Monday I wanted to get you what I could.

Thanks,
Adam H

From: "Sergio Reyes" <sreyes@edafl.com>
To: "Adam Hall" <ad_hall@cityofalachua.org>
Cc: "Rodolfo Valladares" <ro_valladares@cityofalachua.org>, "Adam Boukari@cityofalachua.com" <aboukari@cityofalachua.com>, "Randy Gibbons" <rgibbons@mphhotels.com>, "Meagan Dickey" <mdickey@edafl.com>, "Stephanie Sutton" <ssutton@edafl.com>, "Kathy Winburn" <ka_winburn@cityofalachua.org>

Sent: Wednesday, November 23, 2016 3:02:31 PM
Subject: RE: Holiday Inn - City of Alachua

Adam:

Thanks for the clarification. When can we expect to have a response/clarification to questions 1 and 2?

Have a nice Thanksgiving

Sergio Reyes, P.E.
President
SReyes@edafl.com
eda engineers-surveyors-planners, inc.
2404 NW 43rd Street
Gainesville, FL 32606
(352) 373-3541
www.edafl.com

From: Adam Hall [mailto:ad_hall@cityofalachua.org]
Sent: Wednesday, November 23, 2016 2:47 PM
To: Sergio Reyes <sreyes@edafl.com>
Cc: Rodolfo Valladares <ro_valladares@cityofalachua.org>; Adam Boukari@cityofalachua.com <aboukari@cityofalachua.com>; Randy Gibbons <rgibbons@mphhotels.com>; Meagan Dickey <mdickey@edafl.com>; Stephanie Sutton <ssutton@edafl.com>; Kathy Winburn <ka_winburn@cityofalachua.org>
Subject: Re: Holiday Inn - City of Alachua

Sergio,

Please see responses to Questions 3 and 4 below. Public Services will forward their responses when completed.

3. Location of Fire Hydrant- No tree intended to be a mitigation tree shall be planted within ten feet of a fire hydrant; trees whose roots are known to damage public utilities shall not be planted within fifteen feet of a public utility line (Section 6.2.1 (4)(h)). Perimeter buffer, and parking lot buffer/parking lot interior landscape have no listed setbacks from utility lines or fire hydrants. For this reason, unless the trees to the north of the access road become mitigation trees then I do not see a reason why the hydrant could not be located on the north side of the access point. Public Services requires separation minimums from utility lines and trees, but perimeter buffering still would be required. Use of tree preservation credits may be useful in meeting the required buffering requirements while at the same time meeting separation from utility lines required by public services.

4. 6' Privacy fence on east side of property- The height is permitted by Section 6.3, but would not completely satisfy the requirements of Section 6.2.2(D)(2)(b)iv. A continuous row of shrubs along the eastern perimeter of the parking lot area would be required, but the fencing may be used to satisfy up to 50% of that buffer requirement. Required fencing along north property line- after discussing this issue, the proposed 6' privacy fence along the rear property line, in conjunction with all other residential protection conditions will be satisfactory.

If you have any questions, or need further clarification then please do not hesitate to contact me.

Thank you,

Adam Hall
Planner
City of Alachua

From: "Sergio Reyes" <sreyes@edafl.com>
To: "Adam Hall" <ad_hall@cityofalachua.org>, "Rodolfo Valladares" <ro_valladares@cityofalachua.org>
Cc: "Adam Boukari@cityofalachua.com" <aboukari@cityofalachua.com>, "Randy Gibbons" <rgibbons@mphhotels.com>, "Meagan Dickey" <mdickey@edafl.com>, "Stephanie Sutton" <ssutton@edafl.com>
Sent: Tuesday, November 22, 2016 1:31:06 PM
Subject: Holiday Inn - City of Alachua

All:

Thanks for meeting with us yesterday for the DRT meeting.

As discussed yesterday, we still have some items that we need clarification for the resubmittal of the revised plans:

1. Electrical service to the proposed building. The comments indicated

that the service will be done along the east property line. We requested clarification if there are service connection along NW 167th Blvd, as provided to all the other developments fronting this road, Public Services to clarify.

2. Water tap(s) to serve the project for potable water, fire hydrant, fire connection and irrigation system. Comment was made the only one tap should be proposed to serve this facility. Clarification was requested if that is correct or as prior projects, individual taps were requested and approved for fire services, fire hydrant and potable and irrigation meter. Please clarify how many water taps are required to serve this project.
3. Location of the proposed Fire Hydrant; The proposed fire hydrant crosses a the driving lane (pavement). A comment was made to move the water line feeding the fire hydrant away from the pavement. Only place to located the Fire hydrant and accomplished this will be within the proposed buffer. Please clarify if this is acceptable or we will keep the fire hydrant at the current proposed location
4. Hight of the proposed fence. We are proposing a 6 ft. privacy fence along the north, east (partial) and west property lines. Please clarify is 6 ft. is acceptable or 8 ft. will be required per your comments.

Let me know if we missed any additional information that we will need to respond.

Thanks

Sergio Reyes, P.E.
President
SReyes@edafl.com
eda engineers-surveyors-planners, inc.
2404 NW 43rd Street
Gainesville, FL 32606
(352) 373-3541
www.edafl.com

---

image002.jpg
7 KB

image003.jpg
7 KB

image004.jpg
7 KB

From : Adam Hall <ad_hall@cityofalachua.org>
Subject : Re: Holiday Inn - City of Alachua
To : Sergio Reyes <sreyes@edafl.com>

Wed, Nov 23, 2016 05:27 PM
Holiday Inn Alachua
2 attachments

Sergio,

I would assume Monday since that is when Rodolfo will be back in. I know they were working on a response, but since I will not be in Monday I wanted to get you what I could.

Thanks,
Adam H

From: "Sergio Reyes" <sreyes@edafl.com>
To: "Adam Hall" <ad_hall@cityofalachua.org>
Cc: "Rodolfo Valladares" <ro_valladares@cityofalachua.org>, "Adam

Boukari@cityofalachua.com" <aboukari@cityofalachua.com>, "Randy Gibbons" <rgibbons@mphhotels.com>, "Meagan Dickey" <mdickey@edafl.com>, "Stephanie Sutton" <ssutton@edafl.com>, "Kathy Winburn" <ka_winburn@cityofalachua.org>
Sent: Wednesday, November 23, 2016 3:02:31 PM
Subject: RE: Holiday Inn - City of Alachua

Adam:

Thanks for the clarification. When can we expect to have a response/clarification to questions 1 and 2?

Have a nice Thanksgiving

Sergio Reyes, P.E.
President
SReyes@edafl.com
eda engineers-surveyors-planners, inc.
2404 NW 43rd Street
Gainesville, FL 32606
(352) 373-3541
www.edafl.com

From: Adam Hall [mailto:ad_hall@cityofalachua.org]
Sent: Wednesday, November 23, 2016 2:47 PM
To: Sergio Reyes <sreyes@edafl.com>
Cc: Rodolfo Valladares <ro_valladares@cityofalachua.org>; Adam Boukari@cityofalachua.com <aboukari@cityofalachua.com>; Randy Gibbons <rgibbons@mphhotels.com>; Meagan Dickey <mdickey@edafl.com>; Stephanie Sutton <ssutton@edafl.com>; Kathy Winburn <ka_winburn@cityofalachua.org>
Subject: Re: Holiday Inn - City of Alachua

Sergio,

Please see responses to Questions 3 and 4 below. Public Services will forward their responses when completed.

3. Location of Fire Hydrant- No tree intended to be a mitigation tree shall be planted within ten feet of a fire hydrant; trees whose roots are known to damage public utilities shall not be planted within fifteen feet of a public utility line (Section 6.2.1 (4)(h)). Perimeter buffer, and parking lot buffer/parking lot interior landscape have no listed setbacks from utility lines or fire hydrants. For this reason, unless the trees to the north of the access road become mitigation trees then I do not see a reason why the hydrant could not be located on the north side of the access point. Public Services requires separation minimums from utility lines and trees, but perimeter buffering still would be required. Use of tree preservation credits may be useful in meeting the required buffering requirements while at the same time meeting separation from utility lines required by public services.

4. 6' Privacy fence on east side of property- The height is permitted by Section 6.3, but would not completely satisfy the requirements of Section 6.2.2(D)(2)(b)iv. A continuous row of shrubs along the eastern perimeter of the parking lot area would be required, but the fencing may be used to satisfy up to 50% of that buffer requirement. Required fencing along north property line- after discussing this issue, the proposed 6' privacy fence along the rear property line, in conjunction with all other residential protection conditions will be satisfactory.

If you have any questions, or need further clarification then please do not hesitate to contact me.

Thank you,

Adam Hall
Planner
City of Alachua

From: "Sergio Reyes" <sreyes@edafl.com>
To: "Adam Hall" <ad_hall@cityofalachua.org>, "Rodolfo Valladares" <ro_valladares@cityofalachua.org>
Cc: "Adam Boukari@cityofalachua.com" <aboukari@cityofalachua.com>, "Randy Gibbons" <rgibbons@mphhotels.com>, "Meagan Dickey" <mdickey@edafl.com>, "Stephanie Sutton" <ssutton@edafl.com>
Sent: Tuesday, November 22, 2016 1:31:06 PM
Subject: Holiday Inn - City of Alachua

All:

Thanks for meeting with us yesterday for the DRT meeting.

As discussed yesterday, we still have some items that we need clarification for the resubmittal of the revised plans:

1. Electrical service to the proposed building. The comments indicated that the service will be done along the east property line. We requested clarification if there are service connection along NW 167th Blvd, as provided to all the other developments fronting this road, Public Services to clarify.
2. Water tap(s) to serve the project for potable water, fire hydrant, fire connection and irrigation system. Comment was made the only one tap should be proposed to serve this facility. Clarification was requested if that is correct or as prior projects, individual taps were requested and approved for fire services, fire hydrant and potable and irrigation meter. Please clarify how many water taps are required to serve this project.
3. Location of the proposed Fire Hydrant; The proposed fire hydrant crosses a the driving lane (pavement). A comment was made to move the water line feeding the fire hydrant away from the pavement. Only place to located the Fire hydrant and accomplished this will be within the proposed buffer. Please clarify if this is acceptable or we will keep the fire hydrant at the current proposed location
4. Hight of the proposed fence. We are proposing a 6 ft. privacy fence along the north, east (partial) and west property lines. Please clarify is 6 ft. is acceptable or 8 ft. will be required per your comments.

Let me know if we missed any additional information that we will need to respond.

Thanks

Sergio Reyes, P.E.
President
SReyes@edafl.com
eda engineers-surveyors-planners, inc.

2404 NW 43rd Street
Gainesville, FL 32606
(352) 373-3541
www.edafl.com

---

image002.jpg
7 KB

image004.jpg
7 KB

From : Sergio Reyes <sreyes@edafl.com> Wed, Nov 23, 2016 03:02 PM
Subject : RE: Holiday Inn - City of Alachua Holiday Inn Alachua
To : Adam Hall <ad_hall@cityofalachua.org> 2 attachments
Cc : Rodolfo Valladares <ro_valladares@cityofalachua.org>, Adam Boukari@cityofalachua.com <aboukari@cityofalachua.com>, Randy Gibbons <rgibbons@mphhotels.com>, Meagan Dickey <mdickey@edafl.com>, Stephanie Sutton <ssutton@edafl.com>, Kathy Winburn <ka_winburn@cityofalachua.org>

Adam:

Thanks for the clarification. When can we expect to have a response/clarification to questions 1 and 2?

Have a nice Thanksgiving

Sergio Reyes, P.E.
President
SReyes@edafl.com
eda engineers-surveyors-planners, inc.
2404 NW 43rd Street
Gainesville, FL 32606
(352) 373-3541
www.edafl.com

From: Adam Hall [mailto:ad_hall@cityofalachua.org]
Sent: Wednesday, November 23, 2016 2:47 PM
To: Sergio Reyes <sreyes@edafl.com>
Cc: Rodolfo Valladares <ro_valladares@cityofalachua.org>; Adam Boukari@cityofalachua.com <aboukari@cityofalachua.com>; Randy Gibbons <rgibbons@mphhotels.com>; Meagan Dickey <mdickey@edafl.com>; Stephanie Sutton <ssutton@edafl.com>; Kathy Winburn <ka_winburn@cityofalachua.org>
Subject: Re: Holiday Inn - City of Alachua

Sergio,

Please see responses to Questions 3 and 4 below. Public Services will forward their responses when completed.

3. Location of Fire Hydrant- No tree intended to be a mitigation tree shall be planted within ten feet of a fire hydrant; trees whose roots are known to damage public utilities shall not be planted within fifteen feet of a public utility line (Section 6.2.1 (4)(h)). Perimeter buffer, and parking lot buffer/parking lot interior landscape have no listed setbacks from utility lines or fire hydrants. For this reason, unless the trees to the north of the access road become mitigation trees then I do not see a reason why the hydrant

could not be located on the north side of the access point. Public Services requires separation minimums from utility lines and trees, but perimeter buffering still would be required. Use of tree preservation credits may be useful in meeting the required buffering requirements while at the same time meeting separation from utility lines required by public services.

4. 6' Privacy fence on east side of property- The height is permitted by Section 6.3, but would not completely satisfy the requirements of Section 6.2.2(D)(2)(b)iv. A continuous row of shrubs along the eastern perimeter of the parking lot area would be required, but the fencing may be used to satisfy up to 50% of that buffer requirement. Required fencing along north property line- after discussing this issue, the proposed 6' privacy fence along the rear property line, in conjunction with all other residential protection conditions will be satisfactory.

If you have any questions, or need further clarification then please do not hesitate to contact me.

Thank you,

Adam Hall
Planner
City of Alachua

From: "Sergio Reyes" <sreyes@edafl.com>
To: "Adam Hall" <ad_hall@cityofalachua.org>, "Rodolfo Valladares" <ro_valladares@cityofalachua.org>
Cc: "Adam Boukari@cityofalachua.com" <aboukari@cityofalachua.com>, "Randy Gibbons" <rgibbons@mphhotels.com>, "Meagan Dickey" <mdickey@edafl.com>, "Stephanie Sutton" <ssutton@edafl.com>
Sent: Tuesday, November 22, 2016 1:31:06 PM
Subject: Holiday Inn - City of Alachua

All:

Thanks for meeting with us yesterday for the DRT meeting.

As discussed yesterday, we still have some items that we need clarification for the resubmittal of the revised plans:

1. Electrical service to the proposed building. The comments indicated that the service will be done along the east property line. We requested clarification if there are service connection along NW 167th Blvd, as provided to all the other developments fronting this

road, Public Services to clarify.

2. Water tap(s) to serve the project for potable water, fire hydrant, fire connection and irrigation system. Comment was made the only one tap should be proposed to serve this facility. Clarification was requested if that is correct or as prior projects, individual taps were requested and approved for fire services, fire hydrant and potable and irrigation meter. Please clarify how many water taps are required to serve this project.
3. Location of the proposed Fire Hydrant; The proposed fire hydrant crosses a the driving lane (pavement). A comment was made to move the water line feeding the fire hydrant away from the pavement. Only place to located the Fire hydrant and accomplished this will be within the proposed buffer. Please clarify if this is acceptable or we will keep the fire hydrant at the current proposed location
4. Hight of the proposed fence. We are proposing a 6 ft. privacy fence along the north, east (partial) and west property lines. Please clarify is 6 ft. is acceptable or 8 ft. will be required per your comments.

Let me know if we missed any additional information that we will need to respond.

Thanks

Sergio Reyes, P.E.
President
SReyes@edafl.com
eda engineers-surveyors-planners, inc.
2404 NW 43rd Street
Gainesville, FL 32606
(352) 373-3541
www.edafl.com

image004.jpg
7 KB

image002.jpg
7 KB

From : Adam Hall <ad_hall@cityofalachua.org>

Wed, Nov 23, 2016 02:46 PM

Holiday Inn Alachua

1 attachment

Subject : Re: Holiday Inn - City of Alachua

To : Sergio Reyes <sreyes@edafl.com>

Cc : Rodolfo Valladares <ro_valladares@cityofalachua.org>, Adam Boukari@cityofalachua.com <aboukari@cityofalachua.com>, Randy Gibbons <rgibbons@mphhotels.com>, Meagan Dickey <mdickey@edafl.com>, Stephanie Sutton <ssutton@edafl.com>, Kathy Winburn <ka_winburn@cityofalachua.org>

Sergio,

Please see responses to Questions 3 and 4 below. Public Services will forward their responses when completed.

3. Location of Fire Hydrant- No tree intended to be a mitigation tree shall be planted within ten feet of a fire hydrant; trees whose roots are known to damage public utilities shall not be planted within fifteen feet of a public utility line (Section 6.2.1 (4)(h)). Perimeter buffer, and parking lot buffer/parking lot interior landscape have no listed setbacks from utility lines or fire hydrants. For this reason, unless the trees to the north of the

access road become mitigation trees then I do not see a reason why the hydrant could not be located on the north side of the access point. Public Services requires separation minimums from utility lines and trees, but perimeter buffering still would be required. Use of tree preservation credits may be useful in meeting the required buffering requirements while at the same time meeting separation from utility lines required by public services.

4. 6' Privacy fence on east side of property- The height is permitted by Section 6.3, but would not completely satisfy the requirements of Section 6.2.2(D)(2)(b)iv. A continuous row of shrubs along the eastern perimeter of the parking lot area would be required, but the fencing may be used to satisfy up to 50% of that buffer requirement. Required fencing along north property line- after discussing this issue, the proposed 6' privacy fence along the rear property line, in conjunction with all other residential protection conditions will be satisfactory.

If you have any questions, or need further clarification then please do not hesitate to contact me.

Thank you,

Adam Hall
Planner
City of Alachua

From: "Sergio Reyes" <sreyes@edafl.com>
To: "Adam Hall" <ad_hall@cityofalachua.org>, "Rodolfo Valladares" <ro_valladares@cityofalachua.org>
Cc: "Adam Boukari@cityofalachua.com" <aboukari@cityofalachua.com>, "Randy Gibbons" <rgibbons@mphhotels.com>, "Meagan Dickey" <mdickey@edafl.com>, "Stephanie Sutton" <ssutton@edafl.com>
Sent: Tuesday, November 22, 2016 1:31:06 PM
Subject: Holiday Inn - City of Alachua

All:

Thanks for meeting with us yesterday for the DRT meeting.

As discussed yesterday, we still have some items that we need clarification for the resubmittal of the revised plans:

1. Electrical service to the proposed building. The comments indicated that the service will be done along the east property line. We requested clarification if there are service connection along NW 167th Blvd, as provided to all the other developments fronting this road, Public Services to clarify.
2. Water tap(s) to serve the project for potable water, fire hydrant, fire connection and irrigation system. Comment was made the only one tap should be proposed to serve this facility. Clarification was requested if that is correct or as prior projects, individual taps were requested and approved for fire services, fire hydrant and potable and irrigation meter. Please clarify how many water taps are required to serve this project.
3. Location of the proposed Fire Hydrant; The proposed fire hydrant crosses a the driving lane (pavement). A comment was made to move the water line feeding the fire hydrant away from the pavement. Only place to located the Fire hydrant and accomplished this will be within the proposed buffer. Please clarify if this is acceptable or we will keep the fire hydrant at the current proposed location
4. Hight of the proposed fence. We are proposing a 6 ft. privacy fence along the north, east (partial) and west property lines. Please clarify is 6 ft. is acceptable or 8 ft. will be required per your comments.

Let me know if we missed any additional information that we will need to respond.

Thanks

Sergio Reyes, P.E.
President

SReyes@edafl.com
eda engineers-surveyors-planners, inc.
2404 NW 43rd Street
Gainesville, FL 32606
(352) 373-3541
www.edafl.com

---

image002.jpg
7 KB

From : Sergio Reyes <sreyes@edafl.com> Tue, Nov 22, 2016 01:31 PM
Subject : Holiday Inn - City of Alachua Holiday Inn Alachua
1 attachment
To : Adam Hall <ad_hall@cityofalachua.org>, Rodolfo Valladares <ro_valladares@cityofalachua.org>
Cc : Adam Boukari@cityofalachua.com <aboukari@cityofalachua.com>, Randy Gibbons <rgibbons@mphhotels.com>, Meagan Dickey <mdickey@edafl.com>, Stephanie Sutton <ssutton@edafl.com>

All:

Thanks for meeting with us yesterday for the DRT meeting.

As discussed yesterday, we still have some items that we need

clarification for the resubmittal of the revised plans:

1. Electrical service to the proposed building. The comments indicated that the service will be done along the east property line. We requested clarification if there are service connection along NW 167th Blvd, as provided to all the other developments fronting this road, Public Services to clarify.
2. Water tap(s) to serve the project for potable water, fire hydrant, fire connection and irrigation system. Comment was made the only one tap should be proposed to serve this facility. Clarification was requested if that is correct or as prior projects, individual taps were requested and approved for fire services, fire hydrant and potable and irrigation meter. Please clarify how many water taps are required to serve this project.
3. Location of the proposed Fire Hydrant; The proposed fire hydrant crosses a the driving lane (pavement). A comment was made to move the water line feeding the fire hydrant away from the pavement. Only place to located the Fire hydrant and accomplished this will be within the proposed buffer. Please clarify if this is acceptable or we will keep the fire hydrant at the current proposed location
4. Hight of the proposed fence. We are proposing a 6 ft. privacy fence along the north, east (partial) and west property lines. Please clarify is 6 ft. is acceptable or 8 ft. will be required per your comments.

Let me know if we missed any additional information that we will need to respond.

Thanks

Sergio Reyes, P.E.
President
SReyes@edafl.com
eda engineers-surveyors-planners, inc.
2404 NW 43rd Street
Gainesville, FL 32606

(352) 373-3541
www.edafl.com

image002.jpg
7 KB

FW: Holiday Inn Site Plan Review Comments

From : Kathy Winburn <kwinburn@cityofalachua.org>
Subject : FW: Holiday Inn Site Plan Review Comments
To : ad hall <ad_hall@cityofalachua.org>

Wed, Nov 16, 2016 03:35 PM
Holiday Inn Alachua
1 attachment

Laurie Thomas
Office Administrator

JBrown PROFESSIONAL GROUP
Civil Engineering • Land Surveying • Planning
www.JBProGroup.com
3530 NW 43rd Street · Gainesville, FL 32606
Office: (352) 375-8999 · Fax: (352) 375-0833

From: Adam Hall [mailto:ad_hall@cityofalachua.org]
Sent: Tuesday, December 06, 2016 2:44 PM
To: A. J. 'Jay' Brown, Jr., PE
Cc: Laurie Thomas
Subject: Re: Outside Review for Holiday Inn Site Plan

Mr Brown,

Please find attached a memo requesting your services in providing outside review for a revised site plan application the City has received. This is the resubmission for the Holiday Inn Site Plan proposed in the City of Alachua.

If acceptable, the plans will be at the Building Department counter to be picked up at your convenience.

If you have any questions, or need anything else, please let me know.

Thank you,

Adam Hall
City of Alachua

From: "jay brown" <jay.brown@jbprogroup.com>
To: "Adam Hall" <ad_hall@cityofalachua.org>
Sent: Tuesday, November 15, 2016 4:18:41 PM
Subject: RE: Outside Review for Holiday Inn Site Plan

Adam,
Please find attached my letter with review comments for the Holiday Inn project. Call me any time if you have any questions.
Jay

A. J. "Jay" Brown, Jr., P.E.
President

JBrown PROFESSIONAL GROUP
Civil Engineering • Land Surveying • Planning

www.JBProGroup.com

3530 NW 43rd Street · Gainesville, FL 32606
Office: (352) 375-8999 x102 · Fax: (352) 375-0833 · Mobile: (352) 318-9462

"Our services now include surveying. Please contact us for all of your surveying needs!"

From: Adam Hall [mailto:ad_hall@cityofalachua.org]
Sent: Monday, November 07, 2016 12:06 PM
To: Laurie Thomas
Cc: A. J. 'Jay' Brown, Jr., PE
Subject: Re: Outside Review for Holiday Inn Site Plan

Hi Laurie,

We are open until 6 PM today and open again at 7:30 tomorrow morning. We are closed Thursday and Friday of this week.

Thank you,

Adam H

From: "Laurie Thomas" <laurie.thomas@jbprogroup.com>
To: "jay brown" <jay.brown@jbprogroup.com>, "Adam Hall" <ad_hall@cityofalachua.org>
Sent: Monday, November 7, 2016 11:39:55 AM
Subject: RE: Outside Review for Holiday Inn Site Plan

Adam,

What are the hours of operation? I will pick them up either this afternoon or in the morning.

Thanks,

Laurie Thomas
Office Administrator

www.JBProGroup.com

3530 NW 43rd Street · Gainesville, FL 32606
Office: (352) 375-8999 · Fax: (352) 375-0833

From: A. J. 'Jay' Brown, Jr., PE

Sent: Monday, November 07, 2016 11:34 AM
To: Adam Hall
Cc: Laurie Thomas
Subject: Re: Outside Review for Holiday Inn Site Plan

Sure thing Adam. We will pick them up today it first thing in the morning.
Thank you,
Jay

Sent from my iPhone

On Nov 7, 2016, at 11:15 AM, Adam Hall <ad_hall@cityofalachua.org> wrote:

> Mr Brown,
>
> Please find attached a memo requesting your services in providing outside review for a site plan application the City has received.
>
> If acceptable, the plans will be at the Building Department counter to be picked up at your convenience.
>
> If you have any questions, or need anything else, please let me know.
>
> Thank you,
>
> --
> Adam Hall, AICP | Planner | Office of Planning and Community Development
> City of Alachua | ahall@cityofalachua.com | Phone: 386.418.6121 | Direct: 386.418.6125
>
> <Holiday Inn Site Plan Review Memo - J Brown.pdf>

JBrown PROFESSIONAL GROUP
Civil Engineering • Land Surveying • Planning

image001.jpg
10 KB

image002.png
34 KB

From : Adam Hall <ad_hall@cityofalachua.org> Tue, Dec 06, 2016 02:39 PM
1 attachment
Subject : Re: Outside Review for Holiday Inn Site Plan
To : jay brown <jay.brown@jbprogroup.com>
Cc : Laurie Thomas <laurie.thomas@jbprogroup.com>

Mr Brown,

Please find attached a memo requesting your services in providing outside review for a revised site plan application the City has received. This is the resubmission for the Holiday Inn Site Plan proposed in the City of Alachua.

If acceptable, the plans will be at the Building Department counter to be picked up at your convenience.

If you have any questions, or need anything else, please let me know.

Thank you,

Adam Hall
City of Alachua

From: "jay brown" <jay.brown@jbprogroup.com>
To: "Adam Hall" <ad_hall@cityofalachua.org>
Sent: Tuesday, November 15, 2016 4:18:41 PM
Subject: RE: Outside Review for Holiday Inn Site Plan

Adam,
Please find attached my letter with review comments for the Holiday Inn project. Call me any time if you have any questions.
Jay

A. J. "Jay" Brown, Jr., P.E.
President

JBrown PROFESSIONAL GROUP
Civil Engineering • Land Surveying • Planning

www.JBProGroup.com

3530 NW 43rd Street · Gainesville, FL 32606
Office: (352) 375-8999 x102 · Fax: (352) 375-0833 · Mobile: (352) 318-9462

"Our services now include surveying. Please contact us for all of your surveying needs!"

From: Adam Hall [mailto:ad_hall@cityofalachua.org]
Sent: Monday, November 07, 2016 12:06 PM
To: Laurie Thomas
Cc: A. J. 'Jay' Brown, Jr., PE
Subject: Re: Outside Review for Holiday Inn Site Plan

Hi Laurie,

We are open until 6 PM today and open again at 7:30 tomorrow morning. We are closed Thursday and Friday of this week.

Thank you,

Adam H

From: "Laurie Thomas" <laurie.thomas@jbprogroup.com>
To: "jay brown" <jay.brown@jbprogroup.com>, "Adam Hall" <ad_hall@cityofalachua.org>
Sent: Monday, November 7, 2016 11:39:55 AM
Subject: RE: Outside Review for Holiday Inn Site Plan

Adam,

What are the hours of operation? I will pick them up either this afternoon or in the morning.

Thanks,

Laurie Thomas
Office Administrator

www.JBProGroup.com

3530 NW 43rd Street · Gainesville, FL 32606
Office: (352) 375-8999 · Fax: (352) 375-0833

From: A. J. 'Jay' Brown, Jr., PE
Sent: Monday, November 07, 2016 11:34 AM

To: Adam Hall
Cc: Laurie Thomas
Subject: Re: Outside Review for Holiday Inn Site Plan

Sure thing Adam. We will pick them up today it first thing in the morning.
Thank you,
Jay

Sent from my iPhone

On Nov 7, 2016, at 11:15 AM, Adam Hall <ad_hall@cityofalachua.org> wrote:

> Mr Brown,
>
> Please find attached a memo requesting your services in providing outside review for a site plan application the City has received.
>
> If acceptable, the plans will be at the Building Department counter to be picked up at your convenience.
>
> If you have any questions, or need anything else, please let me know.
>
> Thank you,
>
> --
> Adam Hall, AICP | Planner | Office of Planning and Community Development
> City of Alachua | ahall@cityofalachua.com | Phone: 386.418.6121 | Direct: 386.418.6125
>
> <Holiday Inn Site Plan Review Memo - J Brown.pdf>

---

image003.png
34 KB

From : A. J. 'Jay' Brown, Jr., PE Tue, Nov 15, 2016 04:18 PM

<jay.brown@jbprogroup.com>

Holiday Inn Alachua

Subject : RE: Outside Review for Holiday Inn Site Plan

2 attachments

To : Adam Hall <ad_hall@cityofalachua.org>

Adam,
Please find attached my letter with review comments for the Holiday Inn project. Call me any time if you have any questions.
Jay

A. J. "Jay" Brown, Jr., P.E.
President

JBrown PROFESSIONAL GROUP
Civil Engineering • Land Surveying • Planning

www.JBProGroup.com

3530 NW 43rd Street · Gainesville, FL 32606
Office: (352) 375-8999 x102 · Fax: (352) 375-0833 · Mobile: (352) 318-9462

"Our services now include surveying. Please contact us for all of your surveying needs!"

From: Adam Hall [mailto:ad_hall@cityofalachua.org]
Sent: Monday, November 07, 2016 12:06 PM
To: Laurie Thomas
Cc: A. J. 'Jay' Brown, Jr., PE
Subject: Re: Outside Review for Holiday Inn Site Plan

Hi Laurie,

We are open until 6 PM today and open again at 7:30 tomorrow morning. We are closed Thursday and Friday of this week.

Thank you,

Adam H

From: "Laurie Thomas" <laurie.thomas@jbprogroup.com>
To: "jay brown" <jay.brown@jbprogroup.com>, "Adam Hall" <ad_hall@cityofalachua.org>
Sent: Monday, November 7, 2016 11:39:55 AM
Subject: RE: Outside Review for Holiday Inn Site Plan

Adam,

What are the hours of operation? I will pick them up either this afternoon or in the morning.

Thanks,

Laurie Thomas
Office Administrator

www.JBProGroup.com

3530 NW 43rd Street · Gainesville, FL 32606
Office: (352) 375-8999 · Fax: (352) 375-0833

From: A. J. 'Jay' Brown, Jr., PE
Sent: Monday, November 07, 2016 11:34 AM
To: Adam Hall
Cc: Laurie Thomas
Subject: Re: Outside Review for Holiday Inn Site Plan

Sure thing Adam. We will pick them up today it first thing in the morning.
Thank you,
Jay

Sent from my iPhone

On Nov 7, 2016, at 11:15 AM, Adam Hall <ad_hall@cityofalachua.org> wrote:

> Mr Brown,
>
> Please find attached a memo requesting your services in providing outside review for a site plan application the City has received.
>
> If acceptable, the plans will be at the Building Department counter to be picked up at your convenience.
>
> If you have any questions, or need anything else, please let me know.
>
> Thank you,
>
> --
> Adam Hall, AICP | Planner | Office of Planning and Community Development
> City of Alachua | ahall@cityofalachua.com | Phone: 386.418.6121 | Direct: 386.418.6125

<Holiday Inn Site Plan Review Memo - J Brown.pdf>

---

image003.png
34 KB

JBPro - Review Comment Letter - Holiday Inn 11-15-16.pdf
220 KB

From : Laurie Thomas <laurie.thomas@jbprogroup.com>
Subject : RE: Outside Review for Holiday Inn Site Plan
To : Adam Hall <ad_hall@cityofalachua.org>

Mon, Nov 07, 2016 12:11 PM
Holiday Inn Alachua
1 attachment

Thanks Adam. I will swing by in the morning after I drop my daughter off at Irby.

Thanks,

Laurie Thomas
Office Administrator

JBrown PROFESSIONAL GROUP
Civil Engineering • Land Surveying • Planning
www.JBProGroup.com
3530 NW 43rd Street · Gainesville, FL 32606
Office: (352) 375-8999 · Fax: (352) 375-0833

From: Adam Hall [mailto:ad_hall@cityofalachua.org]
Sent: Monday, November 07, 2016 12:06 PM
To: Laurie Thomas
Cc: A. J. 'Jay' Brown, Jr., PE
Subject: Re: Outside Review for Holiday Inn Site Plan

Hi Laurie,

We are open until 6 PM today and open again at 7:30 tomorrow morning. We are

closed Thursday and Friday of this week.

Thank you,

Adam H

From: "Laurie Thomas" <laurie.thomas@jbprogroup.com>
To: "jay brown" <jay.brown@jbprogroup.com>, "Adam Hall" <ad_hall@cityofalachua.org>
Sent: Monday, November 7, 2016 11:39:55 AM
Subject: RE: Outside Review for Holiday Inn Site Plan

Adam,

What are the hours of operation? I will pick them up either this afternoon or in the morning.

Thanks,

Laurie Thomas
Office Administrator

www.JBProGroup.com

3530 NW 43rd Street · Gainesville, FL 32606
Office: (352) 375-8999 · Fax: (352) 375-0833

From: A. J. 'Jay' Brown, Jr., PE
Sent: Monday, November 07, 2016 11:34 AM
To: Adam Hall
Cc: Laurie Thomas
Subject: Re: Outside Review for Holiday Inn Site Plan

Sure thing Adam. We will pick them up today it first thing in the morning.
Thank you,
Jay

Sent from my iPhone

On Nov 7, 2016, at 11:15 AM, Adam Hall <ad_hall@cityofalachua.org> wrote:

> Mr Brown,

Please find attached a memo requesting your services in providing outside review for a site plan application the City has received.

If acceptable, the plans will be at the Building Department counter to be picked up at your convenience.

If you have any questions, or need anything else, please let me know.

Thank you,

--

Adam Hall, AICP | Planner | Office of Planning and Community Development
City of Alachua | ahall@cityofalachua.com | Phone: 386.418.6121 | Direct: 386.418.6125

<Holiday Inn Site Plan Review Memo - J Brown.pdf>

---

image001.jpg
10 KB

From : Adam Hall <ad_hall@cityofalachua.org>

Mon, Nov 07, 2016 12:01 PM

Holiday Inn Alachua

Subject : Re: Outside Review for Holiday Inn Site Plan

To : Laurie Thomas <laurie.thomas@jbprogroup.com>

Cc : jay brown <jay.brown@jbprogroup.com>

Hi Laurie,

We are open until 6 PM today and open again at 7:30 tomorrow morning. We are closed Thursday and Friday of this week.

Thank you,

Adam H

From: "Laurie Thomas" <laurie.thomas@jbprogroup.com>
To: "jay brown" <jay.brown@jbprogroup.com>, "Adam Hall" <ad_hall@cityofalachua.org>
Sent: Monday, November 7, 2016 11:39:55 AM

Subject: RE: Outside Review for Holiday Inn Site Plan

Adam,

What are the hours of operation? I will pick them up either this afternoon or in the morning.

Thanks,

Laurie Thomas
Office Administrator

cid:image003.jpg@C

www.JBProGroup.com

3530 NW 43rd Street · Gainesville, FL 32606
Office: (352) 375-8999 · Fax: (352) 375-0833

From: A. J. 'Jay' Brown, Jr., PE
Sent: Monday, November 07, 2016 11:34 AM
To: Adam Hall
Cc: Laurie Thomas
Subject: Re: Outside Review for Holiday Inn Site Plan

Sure thing Adam. We will pick them up today it first thing in the morning.
Thank you,
Jay

Sent from my iPhone

On Nov 7, 2016, at 11:15 AM, Adam Hall <ad_hall@cityofalachua.org> wrote:

> Mr Brown,
>
> Please find attached a memo requesting your services in providing outside review for a site plan application the City has received.

I wanted to confirm that you had received this. If comments have been submitted to me, I have not received them yet. The Staff DRT is scheduled for this Thursday, November 17, 2016.

Adam H

From: "Adam Hall" <ad_hall@cityofalachua.org>
To: "Brian Green" <bgreen@alachuacounty.us>, "William P. Whitelock" <wi_whitelock@cityofalachua.org>
Sent: Monday, November 7, 2016 1:51:09 PM
Subject: Electronic Application for Site Plan for Holiday Inn Alachua

Brian and Bill,

Please find a link to an electronic version of plans for the Holiday Inn Alachua site plan application here: http://cloud.cityofalachua.org/index.php/s/jOownUXgLCogut2. Please submit any comments by Wednesday, November 16, 2016 at 5 PM. The Staff DRT is schedule for Thursday, November 17, 2016 at 2 PM. The applicant DRT is scheduled for Monday, November 21, 2016 at 2 PM.

Bill, the application can also be found on our shared drive at: X:\Planning and Community Development\Planning Division\Development Applications\Site Plans\Holiday Inn\Submittals \2016_10_31 .

If you have any questions or need more information, please let me know.

Thank you,

--
Adam Hall, AICP | Planner | Office of Planning and Community Development
City of Alachua | ahall@cityofalachua.com | Phone: 386.418.6121 | Direct: 386.418.6125

From : Brian Green <bgreen@AlachuaCounty.US>
Subject : RE: Electronic Application for Site Plan for Holiday Inn Alachua
To : Adam Hall <ad_hall@cityofalachua.org>

Tue, Nov 15, 2016 02:26 PM
Holiday Inn Alachua

Adam,

The flow test was done along US 441 at a much lower elevation than where the hotel will be. A new flow test shall be done from a fire hydrant closer to the hotel.

Brian Green
Alachua County Fire Rescue
Life Safety / Internal Affairs Branch
352-384-3103 office
352-494-3140 cell
352-384-3157 fax
BGREEN@ALACHUACOUNTY.US

From: Adam Hall [mailto:ad_hall@cityofalachua.org]
Sent: Tuesday, November 15, 2016 2:11 PM
To: Brian Green
Subject: Fwd: Electronic Application for Site Plan for Holiday Inn Alachua

Brian,

I wanted to confirm that you had received this. If comments have been submitted to me, I have not received them yet. The Staff DRT is scheduled for this Thursday, November 17, 2016.

Adam H

From: "Adam Hall" <ad_hall@cityofalachua.org>
To: "Brian Green" <bgreen@alachuacounty.us>, "William P. Whitelock" <wi_whitelock@cityofalachua.org>
Sent: Monday, November 7, 2016 1:51:09 PM
Subject: Electronic Application for Site Plan for Holiday Inn Alachua

Brian and Bill,

Please find a link to an electronic version of plans for the Holiday Inn Alachua site plan application here: http://cloud.cityofalachua.org/index.php/s/jOownUXgLCogut2. Please submit any comments by Wednesday, November 16, 2016 at 5 PM. The Staff DRT is schedule for Thursday, November 17, 2016 at 2 PM. The applicant DRT is scheduled for Monday, November 21, 2016 at 2 PM.

Bill, the application can also be found on our shared drive at: X:\Planning and Community Development\Planning Division\Development Applications\Site Plans\Holiday Inn\Submittals \2016_10_31 .

If you have any questions or need more information, please let me know.

Thank you,

--
Adam Hall, AICP | Planner | Office of Planning and Community Development
City of Alachua | ahall@cityofalachua.com | Phone: 386.418.6121 | Direct: 386.418.6125

From : Adam Hall <ad_hall@cityofalachua.org>
Tue, Nov 15, 2016 02:10 PM
Holiday Inn Alachua
Subject : Fwd: Electronic Application for Site Plan for Holiday Inn Alachua
To : Brian Green <bgreen@alachuacounty.us>

Brian,

I wanted to confirm that you had received this. If comments have been submitted to me, I have not received them yet. The Staff DRT is scheduled for this Thursday, November 17, 2016.

Adam H

From: "Adam Hall" <ad_hall@cityofalachua.org>
To: "Brian Green" <bgreen@alachuacounty.us>, "William P. Whitelock" <wi_whitelock@cityofalachua.org>
Sent: Monday, November 7, 2016 1:51:09 PM
Subject: Electronic Application for Site Plan for Holiday Inn Alachua

Brian and Bill,

Please find a link to an electronic version of plans for the Holiday Inn Alachua site plan application here: http://cloud.cityofalachua.org/index.php/s/jOownUXgLCogut2. Please submit any comments by Wednesday, November 16, 2016 at 5 PM. The Staff DRT is schedule for

and Community Development\Planning Division\Development Applications\Site Plans\Holiday Inn\Submittals\2016_10_31 .

If you have any questions or need more information, please let me know.

Thank you,

--

Adam Hall, AICP | Planner | Office of Planning and Community Development
City of Alachua | ahall@cityofalachua.com | Phone: 386.418.6121 | Direct: 386.418.6125

Accept: DRT (Applicant)

From : Rodolfo Valladares <ro_valladares@cityofalachua.org>

Wed, Nov 09, 2016 03:39 PM

Holiday Inn Alachua

1 attachment

Subject : Accept: DRT (Applicant)

To : ad hall <ad_hall@cityofalachua.org>

Subject: DRT (Applicant)

Organizer: ad_hall@cityofalachua.org

Location: Swick House - Conference Room 1

Time: Monday, November 21, 2016, 2:00:00 PM - 3:30:00 PM GMT -05:00 US/Canada Eastern

Invitees: ad_boukari@cityofalachua.org; tr_gresham@cityofalachua.org; marian@robertarushpa.com; ro_valladares@cityofalachua.org; ju_tabor@cityofalachua.org; bgreen@alachuacounty.us; wi_whitelock@cityofalachua.org; ka_winburn@cityofalachua.org

~~*~*~*~*~*~*~*~*

Yes, I will attend.

---

meeting.ics
2 KB

From : Marian Rush <marian@robertarushpa.com>
Tue, Nov 08, 2016 10:28 AM
Holiday Inn Alachua
Subject : Accepted: DRT (Applicant)
To : Adam Hall <ad_hall@cityofalachua.org>

From : Adam Boukari <aboukari@cityofalachua.org>
Tue, Nov 08, 2016 08:35 AM
Holiday Inn Alachua
1 attachment
Subject : Accept: DRT (Applicant)
To : ad hall <ad_hall@cityofalachua.org>

Subject: DRT (Applicant)
Organizer: ad_hall@cityofalachua.org

Location: Swick House - Conference Room 1
Time: Monday, November 21, 2016, 2:00:00 PM - 3:30:00 PM GMT -05:00 US/Canada Eastern

Invitees: ad_boukari@cityofalachua.org; tr_gresham@cityofalachua.org; marian@robertarushpa.com; ro_valladares@cityofalachua.org; ju_tabor@cityofalachua.org;

bgreen@alachuacounty.us; wi_whitelock@cityofalachua.org; ka_winburn@cityofalachua.org

~~*~*~*~*~*~*~*~*

Yes, I will attend.

---

meeting.ics
2 KB

From : Justin Tabor <jtabor@cityofalachua.org>
Subject : Accept: DRT (Applicant)
To : ad hall <ad_hall@cityofalachua.org>

Tue, Nov 08, 2016 08:31 AM
Holiday Inn Alachua
1 attachment

Subject: DRT (Applicant)
Organizer: ad_hall@cityofalachua.org

Location: Swick House - Conference Room 1
Time: Monday, November 21, 2016, 2:00:00 PM - 3:30:00 PM GMT -05:00 US/Canada Eastern

Invitees: ad_boukari@cityofalachua.org; tr_gresham@cityofalachua.org; marian@robertarushpa.com; ro_valladares@cityofalachua.org; ju_tabor@cityofalachua.org; bgreen@alachuacounty.us; wi_whitelock@cityofalachua.org; ka_winburn@cityofalachua.org

~~*~*~*~*~*~*~*~*

Yes, I will attend.

---

meeting.ics
2 KB

From : Adam Hall <ad_hall@cityofalachua.org>

Tue, Nov 08, 2016 08:28 AM

Holiday Inn Alachua

1 attachment

Subject : DRT (Applicant)

To : Adam Boukari <ad_boukari@cityofalachua.org>, Traci Gresham <tr_gresham@cityofalachua.org>, Marian Rush <marian@robertarushpa.com>, Rodolfo Valladares <ro_valladares@cityofalachua.org>, Justin Tabor <ju_tabor@cityofalachua.org>, Brian Green <bgreen@alachuacounty.us>, William P. Whitelock <wi_whitelock@cityofalachua.org>, Kathy Winburn <ka_winburn@cityofalachua.org>

```
The following is a new meeting request:

Subject: DRT (Applicant)
Organizer: "Adam Hall" <ad_hall@cityofalachua.org>

Location: Swick House - Conference Room 1
Time: Monday, November 21, 2016, 2:00:00 PM - 3:30:00
PM GMT -05:00 US/Canada Eastern

Invitees: ad_boukari@cityofalachua.org;
```

tr_gresham@cityofalachua.org; marian@robertarushpa.com; ro_valladares@cityofalachua.org; ju_tabor@cityofalachua.org; bgreen@alachuacounty.us; wi_whitelock@cityofalachua.org; ka_winburn@cityofalachua.org

~~*~*~*~*~*~*~*~*

---

meeting.ics
2 KB

Accept: DRT (Staff): Holiday Inn

From : Rodolfo Valladares <ro_valladares@cityofalachua.org>
Subject : Accept: DRT (Staff): Holiday Inn
To : ad hall <ad_hall@cityofalachua.org>

Wed, Nov 09, 2016 03:37 PM
Holiday Inn Alachua
1 attachment

Subject: DRT (Staff): Holiday Inn
Organizer: ad_hall@cityofalachua.org

Location: Planning Conference Room
Time: Thursday, November 17, 2016, 2:00:00 PM - 3:00:00 PM GMT -05:00 US/Canada Eastern

Invitees: ad_boukari@cityofalachua.org; tr_gresham@cityofalachua.org; marian@robertarushpa.com; ju_tabor@cityofalachua.org; ka_winburn@cityofalachua.org; wi_whitelock@cityofalachua.org; bgreen@alachuacounty.us; ro_valladares@cityofalachua.org;

je_meetoo@cityofalachua.org

~~*~*~*~*~*~*~*~*

Yes, I will attend.

---

meeting.ics
2 KB

From : Adam Boukari <aboukari@cityofalachua.org>
Subject : Accept: DRT (Staff): Holiday Inn
To : ad hall <ad_hall@cityofalachua.org>

Tue, Nov 08, 2016 08:38 AM
Holiday Inn Alachua
1 attachment

Subject: DRT (Staff): Holiday Inn
Organizer: ad_hall@cityofalachua.org

Location: Planning Conference Room
Time: Thursday, November 17, 2016, 2:00:00 PM - 3:00:00 PM GMT -05:00 US/Canada Eastern

Invitees: ad_boukari@cityofalachua.org; tr_gresham@cityofalachua.org; marian@robertarushpa.com; ju_tabor@cityofalachua.org; ka_winburn@cityofalachua.org; wi_whitelock@cityofalachua.org; bgreen@alachuacounty.us; ro_valladares@cityofalachua.org; je_meetoo@cityofalachua.org

~~*~*~*~*~*~*~*~*

Yes, I will attend.

---

meeting.ics
2 KB

From : Justin Tabor <jtabor@cityofalachua.org>
Subject : Accept: DRT (Staff): Holiday Inn
To : ad hall <ad_hall@cityofalachua.org>

Mon, Nov 07, 2016 04:57 PM
Holiday Inn Alachua
1 attachment

Subject: DRT (Staff): Holiday Inn
Organizer: ad_hall@cityofalachua.org

Location: Planning Conference Room
Time: Thursday, November 17, 2016, 2:00:00 PM - 3:00:00 PM GMT -05:00 US/Canada Eastern

Invitees: ad_boukari@cityofalachua.org; tr_gresham@cityofalachua.org; marian@robertarushpa.com; ju_tabor@cityofalachua.org; ka_winburn@cityofalachua.org; wi_whitelock@cityofalachua.org; bgreen@alachuacounty.us; ro_valladares@cityofalachua.org; je_meetoo@cityofalachua.org

~~*~*~*~*~*~*~*~*

Yes, I will attend.

---

meeting.ics
2 KB

meeting.ics
3 KB

Holiday In - City of Alachua

From : Sergio Reyes <sreyes@edafl.com> Tue, Nov 08, 2016 03:55 PM
Subject : Holiday In - City of Alachua Holiday Inn Alachua
5 attachments
To : Rodolfo Valladares <ro_valladares@cityofalachua.org>
Cc : Adam Hall <ad_hall@cityofalachua.org>, Stephanie Sutton <ssutton@edafl.com>, 'Adam Boukari' <aboukari@cityofalachua.org>

Rodolfo:

We have been ask to provide a letter from the Public Services department (see attached) indicating that the city can provide the flow required for this project. As part of our submittal and after meeting with the city staff, we provided the information required for what this project will need for potable water and fire protection (see attached).

We will appreciate your help with this letter. Let us know if you need anything else.

Thanks

Sergio Reyes, P.E.
President
SReyes@edafl.com

eda engineers-surveyors-planners, inc.
2404 NW 43rd Street
Gainesville, FL 32606
(352) 373-3541
www.edafl.com

---

image002.jpg
7 KB

Application Acceptance Letter - November 3, 2016.pdf
84 KB

Fire Flow Test.pdf
114 KB

Fire System Letter.pdf
145 KB

Holiday Inn Water Calculations.pdf
1 MB

RE: Completeness Review Letter for Holiday Inn Site Plan Application

---

From : Stephanie Sutton <ssutton@edafl.com>
Subject : RE: Completeness Review Letter for Holiday Inn Site Plan Application
To : Adam Hall <ad_hall@cityofalachua.org>

Tue, Nov 08, 2016 01:05 PM
Holiday Inn Alachua
1 attachment

OK- thank you. Please let me know when the location is confirmed. We'll plan on the Swick House for now.

Stephanie Sutton
Project Manager
SSutton@edafl.com
eda engineers-surveyors-planners, inc.
2404 NW 43rd Street
Gainesville, FL 32606
(352) 373-3541
www.edafl.com

From: Adam Hall [mailto:ad_hall@cityofalachua.org]
Sent: Tuesday, November 8, 2016 12:51 PM
To: Stephanie Sutton <ssutton@edafl.com>
Subject: Re: Completeness Review Letter for Holiday Inn Site Plan Application

Stephanie, we have scheduled the DRT for the 21st at 2 PM. It will more than likely be in the Swick House.

We will provide comments at the meeting as they may not be final until the day before.

Adam H

From: "Stephanie Sutton" <ssutton@edafl.com>
To: "Adam Hall" <ad_hall@cityofalachua.org>
Cc: "Sergio Reyes" <sreyes@edafl.com>, "Melissa Watson" <mwatson@edafl.com>
Sent: Monday, November 7, 2016 8:08:36 AM
Subject: RE: Completeness Review Letter for Holiday Inn Site Plan Application

Great. Melissa from our office will come up this morning to put everything together. Can you let us know what time would be best?

We are available anytime on the 21st for DRT. Can we get the comments ahead of the meeting?

Stephanie

Stephanie Sutton
Project Manager
SSutton@edafl.com
eda engineers-surveyors-planners, inc.
2404 NW 43rd Street
Gainesville, FL 32606
(352) 373-3541

www.edafl.com

From: Adam Hall [mailto:ad_hall@cityofalachua.org]
Sent: Monday, November 7, 2016 7:36 AM
To: Stephanie Sutton <ssutton@edafl.com>
Cc: Sergio Reyes <sreyes@edafl.com>; Melissa Watson <mwatson@edafl.com>
Subject: Re: Completeness Review Letter for Holiday Inn Site Plan Application

Stephanie,

Yes, all the materials are available here. If you give me some heads up the person could use our conference room.

As for the date, we can do the 21st or 22nd the next week, but this reduces the amount of time you all have to address any DRT comments and resubmit (resubmittal deadline is December 5th in order to get on the January PZB agenda).

Adam Hall

From: "Stephanie Sutton" <ssutton@edafl.com>
To: "Adam Hall" <ad_hall@cityofalachua.org>, "Sergio Reyes" <sreyes@edafl.com>
Cc: "Melissa Watson" <mwatson@edafl.com>
Sent: Friday, November 4, 2016 11:51:46 AM
Subject: RE: Completeness Review Letter for Holiday Inn Site Plan Application

Adam,

What other days/times are available for a DRT meeting? We have a conflict on 11/17.

Do you have all of the materials at your office and could we just send someone up to combine them into the appropriate package of materials?

Stephanie

Stephanie Sutton
Project Manager
SSutton@edafl.com
eda engineers-surveyors-planners, inc.

2404 NW 43rd Street
Gainesville, FL 32606

(352) 373-3541
www.edafl.com

From: Adam Hall [mailto:ad_hall@cityofalachua.org]
Sent: Thursday, November 3, 2016 10:46 AM
To: Sergio Reyes <sreyes@edafl.com>
Cc: Stephanie Sutton <ssutton@edafl.com>
Subject: Completeness Review Letter for Holiday Inn Site Plan Application

Sergio,

Please see the attached letter in reference to the submitted site plan application for Holiday Inn.

Will November 17, 2016 at 2 PM work for a DRT meeting?

Also, we will need to have the resubmitted application materials and original application combined by 12 PM on Monday so that we can distribute complete and updated proposed site plans to all DRT members.

Thank you!
--
Adam Hall, AICP | Planner | Office of Planning and Community Development
City of Alachua | ahall@cityofalachua.com | Phone: 386.418.6121 | Direct: 386.418.6125

---

image002.jpg
7 KB

From : Adam Hall <ad_hall@cityofalachua.org>
Subject : Re: Completeness Review Letter for Holiday Inn Site Plan Application
To : Stephanie Sutton <ssutton@edafl.com>

Tue, Nov 08, 2016 12:51 PM
Holiday Inn Alachua

Stephanie, we have scheduled the DRT for the 21st at 2 PM. It will more than likely be in the Swick House.

We will provide comments at the meeting as they may not be final until the day before.

Adam H

From: "Stephanie Sutton" <ssutton@edafl.com>
To: "Adam Hall" <ad_hall@cityofalachua.org>
Cc: "Sergio Reyes" <sreyes@edafl.com>, "Melissa Watson" <mwatson@edafl.com>
Sent: Monday, November 7, 2016 8:08:36 AM
Subject: RE: Completeness Review Letter for Holiday Inn Site Plan Application

Great. Melissa from our office will come up this morning to put everything together. Can you let us know what time would be best?

We are available anytime on the 21st for DRT. Can we get the comments ahead of the meeting?

Stephanie

Stephanie Sutton
Project Manager
SSutton@edafl.com
eda engineers-surveyors-planners, inc.
2404 NW 43rd Street
Gainesville, FL 32606
(352) 373-3541
www.edafl.com

eda_logo_anniv2016 (003)

From: Adam Hall [mailto:ad_hall@cityofalachua.org]
Sent: Monday, November 7, 2016 7:36 AM
To: Stephanie Sutton <ssutton@edafl.com>
Cc: Sergio Reyes <sreyes@edafl.com>; Melissa Watson <mwatson@edafl.com>
Subject: Re: Completeness Review Letter for Holiday Inn Site Plan Application

Stephanie,

Yes, all the materials are available here. If you give me some heads up the person could use our conference room.

As for the date, we can do the 21st or 22nd the next week, but this reduces the amount of time you all have to address any DRT comments and resubmit (resubmittal deadline is December 5th in order to get on the January PZB agenda).

Adam Hall

From: "Stephanie Sutton" <ssutton@edafl.com>
To: "Adam Hall" <ad_hall@cityofalachua.org>, "Sergio Reyes" <sreyes@edafl.com>
Cc: "Melissa Watson" <mwatson@edafl.com>
Sent: Friday, November 4, 2016 11:51:46 AM
Subject: RE: Completeness Review Letter for Holiday Inn Site Plan Application

Adam,

What other days/times are available for a DRT meeting? We have a conflict on 11/17.

Do you have all of the materials at your office and could we just send someone up to combine them into the appropriate package of materials?

Stephanie

Stephanie Sutton
Project Manager
SSutton@edafl.com
eda engineers-surveyors-planners, inc.
2404 NW 43rd Street
Gainesville, FL 32606
(352) 373-3541
www.edafl.com

eda_logo_anniv2016 (003)

From: Adam Hall [mailto:ad_hall@cityofalachua.org]
Sent: Thursday, November 3, 2016 10:46 AM
To: Sergio Reyes <sreyes@edafl.com>
Cc: Stephanie Sutton <ssutton@edafl.com>
Subject: Completeness Review Letter for Holiday Inn Site Plan Application

Sergio,

Please see the attached letter in reference to the submitted site plan application for Holiday Inn.

Will November 17, 2016 at 2 PM work for a DRT meeting?

Also, we will need to have the resubmitted application materials and original application combined by 12 PM on Monday so that we can distribute complete and updated proposed site plans to all DRT members.

Thank you!
--
Adam Hall, AICP | Planner | Office of Planning and Community Development
City of Alachua | ahall@cityofalachua.com | Phone: 386.418.6121 | Direct: 386.418.6125

From : Adam Hall <ad_hall@cityofalachua.org>
Subject : Re: Completeness Review Letter for Holiday Inn Site Plan Application
To : Stephanie Sutton <ssutton@edafl.com>
Cc : Sergio Reyes <sreyes@edafl.com>, Melissa Watson <mwatson@edafl.com>

Mon, Nov 07, 2016 01:34 PM
Holiday Inn Alachua
4 attachments

Thank you!

Adam H

From: "Stephanie Sutton" <ssutton@edafl.com>
To: "Adam Hall" <ad_hall@cityofalachua.org>
Cc: "Sergio Reyes" <sreyes@edafl.com>, "Melissa Watson" <mwatson@edafl.com>
Sent: Monday, November 7, 2016 1:32:11 PM
Subject: RE: Completeness Review Letter for Holiday Inn Site Plan

Application

Yes- Adam, please visit edafl.com and click on ftp at the top right.
Username: holiday
Password: inn
There is a folder with today's date with all of the materials.

Stephanie

Stephanie Sutton
Project Manager
SSutton@edafl.com
eda engineers-surveyors-planners, inc.
2404 NW 43rd Street
Gainesville, FL 32606
(352) 373-3541
www.edafl.com

From: Adam Hall [mailto:ad_hall@cityofalachua.org]
Sent: Monday, November 7, 2016 11:20 AM
To: Stephanie Sutton <ssutton@edafl.com>
Cc: Sergio Reyes <sreyes@edafl.com>; Melissa Watson <mwatson@edafl.com>
Subject: Re: Completeness Review Letter for Holiday Inn Site Plan Application

Stephanie,

Can you also ftp me a complete and updated application package digitally?

Thank you!

Adam H

From: "Stephanie Sutton" <ssutton@edafl.com>
To: "Adam Hall" <ad_hall@cityofalachua.org>
Cc: "Sergio Reyes" <sreyes@edafl.com>, "Melissa Watson" <mwatson@edafl.com>
Sent: Monday, November 7, 2016 8:52:19 AM
Subject: RE: Completeness Review Letter for Holiday Inn Site Plan Application

OK- she's headed your way now!

Stephanie Sutton
Project Manager
SSutton@edafl.com
eda engineers-surveyors-planners, inc.

2404 NW 43rd Street
Gainesville, FL 32606
(352) 373-3541
www.edafl.com

From: Adam Hall [mailto:ad_hall@cityofalachua.org]
Sent: Monday, November 7, 2016 8:26 AM
To: Stephanie Sutton <ssutton@edafl.com>
Cc: Sergio Reyes <sreyes@edafl.com>; Melissa Watson <mwatson@edafl.com>
Subject: Re: Completeness Review Letter for Holiday Inn Site Plan Application

Anytime, 9 AM to 11 AM.

Adam H

From: "Stephanie Sutton" <ssutton@edafl.com>
To: "Adam Hall" <ad_hall@cityofalachua.org>
Cc: "Sergio Reyes" <sreyes@edafl.com>, "Melissa Watson" <mwatson@edafl.com>
Sent: Monday, November 7, 2016 8:08:36 AM
Subject: RE: Completeness Review Letter for Holiday Inn Site Plan Application

Great. Melissa from our office will come up this morning to put everything together. Can you let us know what time would be best?

We are available anytime on the 21st for DRT. Can we get the comments ahead of the meeting?

Stephanie

Stephanie Sutton
Project Manager
SSutton@edafl.com
eda engineers-surveyors-planners, inc.

2404 NW 43rd Street

Gainesville, FL 32606
(352) 373-3541
www.edafl.com

From: Adam Hall [mailto:ad_hall@cityofalachua.org]
Sent: Monday, November 7, 2016 7:36 AM
To: Stephanie Sutton <ssutton@edafl.com>
Cc: Sergio Reyes <sreyes@edafl.com>; Melissa Watson <mwatson@edafl.com>
Subject: Re: Completeness Review Letter for Holiday Inn Site Plan Application

Stephanie,

Yes, all the materials are available here. If you give me some heads up the person could use our conference room.

As for the date, we can do the 21st or 22nd the next week, but this reduces the amount of time you all have to address any DRT comments and resubmit (resubmittal deadline is December 5th in order to get on the January PZB agenda).

Adam Hall

From: "Stephanie Sutton" <ssutton@edafl.com>
To: "Adam Hall" <ad_hall@cityofalachua.org>, "Sergio Reyes" <sreyes@edafl.com>
Cc: "Melissa Watson" <mwatson@edafl.com>
Sent: Friday, November 4, 2016 11:51:46 AM
Subject: RE: Completeness Review Letter for Holiday Inn Site Plan Application

Adam,

What other days/times are available for a DRT meeting? We have a conflict on 11/17.

Do you have all of the materials at your office and could we just send someone up to combine them into the appropriate package of materials?

Stephanie

Stephanie Sutton
Project Manager
SSutton@edafl.com
eda engineers-surveyors-planners, inc.

2404 NW 43rd Street
Gainesville, FL 32606
(352) 373-3541
www.edafl.com

From: Adam Hall [mailto:ad_hall@cityofalachua.org]
Sent: Thursday, November 3, 2016 10:46 AM
To: Sergio Reyes <sreyes@edafl.com>
Cc: Stephanie Sutton <ssutton@edafl.com>
Subject: Completeness Review Letter for Holiday Inn Site Plan Application

Sergio,

Please see the attached letter in reference to the submitted site plan application for Holiday Inn.

Will November 17, 2016 at 2 PM work for a DRT meeting?

Also, we will need to have the resubmitted application materials and original application combined by 12 PM on Monday so that we can distribute complete and updated proposed site plans to all DRT members.

Thank you!
--
Adam Hall, AICP | Planner | Office of Planning and Community Development
City of Alachua | ahall@cityofalachua.com | Phone: 386.418.6121 | Direct: 386.418.6125

---

image005.jpg
7 KB

image002.jpg
7 KB

image003.jpg
7 KB

image004.jpg
7 KB

From : Stephanie Sutton <ssutton@edafl.com>

Mon, Nov 07, 2016 01:32 PM

Holiday Inn Alachua

4 attachments

Subject : RE: Completeness Review Letter for Holiday Inn Site Plan Application

To : Adam Hall <ad_hall@cityofalachua.org>

Cc : Sergio Reyes <sreyes@edafl.com>, Melissa Watson <mwatson@edafl.com>

Yes- Adam, please visit edafl.com and click on ftp at the top right.
Username: holiday
Password: inn
There is a folder with today's date with all of the materials.

Stephanie

Stephanie Sutton
Project Manager
SSutton@edafl.com
eda engineers-surveyors-planners, inc.
2404 NW 43rd Street
Gainesville, FL 32606
(352) 373-3541
www.edafl.com

From: Adam Hall [mailto:ad_hall@cityofalachua.org]
Sent: Monday, November 7, 2016 11:20 AM
To: Stephanie Sutton <ssutton@edafl.com>
Cc: Sergio Reyes <sreyes@edafl.com>; Melissa Watson <mwatson@edafl.com>
Subject: Re: Completeness Review Letter for Holiday Inn Site Plan Application

Stephanie,

Can you also ftp me a complete and updated application package digitally?

Thank you!

Adam H

From: "Stephanie Sutton" <ssutton@edafl.com>
To: "Adam Hall" <ad_hall@cityofalachua.org>
Cc: "Sergio Reyes" <sreyes@edafl.com>, "Melissa Watson" <mwatson@edafl.com>
Sent: Monday, November 7, 2016 8:52:19 AM
Subject: RE: Completeness Review Letter for Holiday Inn Site Plan Application

OK- she's headed your way now!

Stephanie Sutton
Project Manager
SSutton@edafl.com
eda engineers-surveyors-planners, inc.

2404 NW 43rd Street
Gainesville, FL 32606
(352) 373-3541
www.edafl.com

From: Adam Hall [mailto:ad_hall@cityofalachua.org]
Sent: Monday, November 7, 2016 8:26 AM
To: Stephanie Sutton <ssutton@edafl.com>
Cc: Sergio Reyes <sreyes@edafl.com>; Melissa Watson <mwatson@edafl.com>

Subject: Re: Completeness Review Letter for Holiday Inn Site Plan Application

Anytime, 9 AM to 11 AM.

Adam H

From: "Stephanie Sutton" <ssutton@edafl.com>
To: "Adam Hall" <ad_hall@cityofalachua.org>
Cc: "Sergio Reyes" <sreyes@edafl.com>, "Melissa Watson" <mwatson@edafl.com>
Sent: Monday, November 7, 2016 8:08:36 AM
Subject: RE: Completeness Review Letter for Holiday Inn Site Plan Application

Great. Melissa from our office will come up this morning to put everything together. Can you let us know what time would be best?

We are available anytime on the 21st for DRT. Can we get the comments ahead of the meeting?

Stephanie

Stephanie Sutton
Project Manager
SSutton@edafl.com
eda engineers-surveyors-planners, inc.

2404 NW 43rd Street
Gainesville, FL 32606
(352) 373-3541
www.edafl.com

From: Adam Hall [mailto:ad_hall@cityofalachua.org]
Sent: Monday, November 7, 2016 7:36 AM
To: Stephanie Sutton <ssutton@edafl.com>
Cc: Sergio Reyes <sreyes@edafl.com>; Melissa Watson <mwatson@edafl.com>
Subject: Re: Completeness Review Letter for Holiday Inn Site Plan Application

Stephanie,

Yes, all the materials are available here. If you give me some heads up the person could use our conference room.

As for the date, we can do the 21st or 22nd the next week, but this reduces the amount of time you all have to address any DRT comments and resubmit (resubmittal deadline is December 5th in order to get on the January PZB agenda).

Adam Hall

From: "Stephanie Sutton" <ssutton@edafl.com>
To: "Adam Hall" <ad_hall@cityofalachua.org>, "Sergio Reyes" <sreyes@edafl.com>
Cc: "Melissa Watson" <mwatson@edafl.com>
Sent: Friday, November 4, 2016 11:51:46 AM
Subject: RE: Completeness Review Letter for Holiday Inn Site Plan Application

Adam,

What other days/times are available for a DRT meeting? We have a conflict on 11/17.

Do you have all of the materials at your office and could we just send someone up to combine them into the appropriate package of materials?

Stephanie

Stephanie Sutton
Project Manager
SSutton@edafl.com
eda engineers-surveyors-planners, inc.
2404 NW 43rd Street
Gainesville, FL 32606
(352) 373-3541
www.edafl.com

From: Adam Hall [mailto:ad_hall@cityofalachua.org]
Sent: Thursday, November 3, 2016 10:46 AM
To: Sergio Reyes <sreyes@edafl.com>
Cc: Stephanie Sutton <ssutton@edafl.com>
Subject: Completeness Review Letter for Holiday Inn Site Plan Application

Sergio,

Please see the attached letter in reference to the submitted site plan application for Holiday Inn.

Will November 17, 2016 at 2 PM work for a DRT meeting?

Also, we will need to have the resubmitted application materials and original application combined by 12 PM on Monday so that we can distribute complete and updated proposed site plans to all DRT members.

Thank you!
--
Adam Hall, AICP | Planner | Office of Planning and Community Development
City of Alachua | ahall@cityofalachua.com | Phone: 386.418.6121 | Direct: 386.418.6125

---

image002.jpg
7 KB

image003.jpg
7 KB

image004.jpg
7 KB

image005.jpg
7 KB

From : Adam Hall <ad_hall@cityofalachua.org>
Subject : Re: Completeness Review Letter for Holiday Inn Site Plan Application
To : Stephanie Sutton <ssutton@edafl.com>

Mon, Nov 07, 2016 11:20 AM
Holiday Inn Alachua
3 attachments

Cc : Sergio Reyes <sreyes@edafl.com>,
Melissa Watson
<mwatson@edafl.com>

Stephanie,

Can you also ftp me a complete and updated application package digitally?

Thank you!

Adam H

From: "Stephanie Sutton" <ssutton@edafl.com>
To: "Adam Hall" <ad_hall@cityofalachua.org>
Cc: "Sergio Reyes" <sreyes@edafl.com>, "Melissa Watson" <mwatson@edafl.com>
Sent: Monday, November 7, 2016 8:52:19 AM
Subject: RE: Completeness Review Letter for Holiday Inn Site Plan Application

OK- she's headed your way now!

Stephanie Sutton
Project Manager
SSutton@edafl.com
eda engineers-surveyors-planners, inc.
2404 NW 43rd Street
Gainesville, FL 32606
(352) 373-3541
www.edafl.com

From: Adam Hall [mailto:ad_hall@cityofalachua.org]
Sent: Monday, November 7, 2016 8:26 AM

To: Stephanie Sutton <ssutton@edafl.com>
Cc: Sergio Reyes <sreyes@edafl.com>; Melissa Watson <mwatson@edafl.com>
Subject: Re: Completeness Review Letter for Holiday Inn Site Plan Application

Anytime, 9 AM to 11 AM.

Adam H

From: "Stephanie Sutton" <ssutton@edafl.com>
To: "Adam Hall" <ad_hall@cityofalachua.org>
Cc: "Sergio Reyes" <sreyes@edafl.com>, "Melissa Watson" <mwatson@edafl.com>
Sent: Monday, November 7, 2016 8:08:36 AM
Subject: RE: Completeness Review Letter for Holiday Inn Site Plan Application

Great. Melissa from our office will come up this morning to put everything together. Can you let us know what time would be best?

We are available anytime on the 21st for DRT. Can we get the comments ahead of the meeting?

Stephanie

Stephanie Sutton
Project Manager
SSutton@edafl.com
eda engineers-surveyors-planners, inc.

2404 NW 43rd Street
Gainesville, FL 32606
(352) 373-3541
www.edafl.com

From: Adam Hall [mailto:ad_hall@cityofalachua.org]
Sent: Monday, November 7, 2016 7:36 AM
To: Stephanie Sutton <ssutton@edafl.com>
Cc: Sergio Reyes <sreyes@edafl.com>; Melissa Watson <mwatson@edafl.com>
Subject: Re: Completeness Review Letter for Holiday Inn Site Plan Application

Stephanie,

Yes, all the materials are available here. If you give me some heads up the person could use our conference room.

As for the date, we can do the 21st or 22nd the next week, but this reduces the amount of time you all have to address any DRT comments and resubmit (resubmittal deadline is December 5th in order to get on the January PZB agenda).

Adam Hall

From: "Stephanie Sutton" <ssutton@edafl.com>
To: "Adam Hall" <ad_hall@cityofalachua.org>, "Sergio Reyes" <sreyes@edafl.com>
Cc: "Melissa Watson" <mwatson@edafl.com>
Sent: Friday, November 4, 2016 11:51:46 AM
Subject: RE: Completeness Review Letter for Holiday Inn Site Plan Application

Adam,

What other days/times are available for a DRT meeting? We have a conflict on 11/17.

Do you have all of the materials at your office and could we just send someone up to combine them into the appropriate package of materials?

Stephanie

Stephanie Sutton
Project Manager
SSutton@edafl.com
eda engineers-surveyors-planners, inc.
2404 NW 43rd Street
Gainesville, FL 32606
(352) 373-3541
www.edafl.com

From: Adam Hall [mailto:ad_hall@cityofalachua.org]
Sent: Thursday, November 3, 2016 10:46 AM
To: Sergio Reyes <sreyes@edafl.com>

Cc: Stephanie Sutton <ssutton@edafl.com>
Subject: Completeness Review Letter for Holiday Inn Site Plan Application

Sergio,

Please see the attached letter in reference to the submitted site plan application for Holiday Inn.

Will November 17, 2016 at 2 PM work for a DRT meeting?

Also, we will need to have the resubmitted application materials and original application combined by 12 PM on Monday so that we can distribute complete and updated proposed site plans to all DRT members.

Thank you!
--
Adam Hall, AICP | Planner | Office of Planning and Community Development
City of Alachua | ahall@cityofalachua.com | Phone: 386.418.6121 | Direct: 386.418.6125

---

image002.jpg
7 KB

image003.jpg
7 KB

image004.jpg
7 KB

From : Stephanie Sutton <ssutton@edafl.com>
Subject : RE: Completeness Review Letter for Holiday Inn Site Plan Application
To : Adam Hall <ad_hall@cityofalachua.org>

Mon, Nov 07, 2016 08:52 AM
Holiday Inn Alachua
3 attachments

Cc : Sergio Reyes <sreyes@edafl.com>,
Melissa Watson
<mwatson@edafl.com>

OK- she's headed your way now!

Stephanie Sutton
Project Manager
SSutton@edafl.com
eda engineers-surveyors-planners, inc.
2404 NW 43rd Street
Gainesville, FL 32606
(352) 373-3541
www.edafl.com

From: Adam Hall [mailto:ad_hall@cityofalachua.org]
Sent: Monday, November 7, 2016 8:26 AM
To: Stephanie Sutton <ssutton@edafl.com>
Cc: Sergio Reyes <sreyes@edafl.com>; Melissa Watson <mwatson@edafl.com>
Subject: Re: Completeness Review Letter for Holiday Inn Site Plan Application

Anytime, 9 AM to 11 AM.

Adam H

From: "Stephanie Sutton" <ssutton@edafl.com>
To: "Adam Hall" <ad_hall@cityofalachua.org>
Cc: "Sergio Reyes" <sreyes@edafl.com>, "Melissa Watson" <mwatson@edafl.com>
Sent: Monday, November 7, 2016 8:08:36 AM
Subject: RE: Completeness Review Letter for Holiday Inn Site Plan Application

Great. Melissa from our office will come up this morning to put everything together. Can you let us know what time would be best?

We are available anytime on the 21st for DRT. Can we get the comments ahead of the meeting?

Stephanie

Stephanie Sutton
Project Manager
SSutton@edafl.com
eda engineers-surveyors-planners, inc.

2404 NW 43rd Street
Gainesville, FL 32606
(352) 373-3541
www.edafl.com

From: Adam Hall [mailto:ad_hall@cityofalachua.org]
Sent: Monday, November 7, 2016 7:36 AM
To: Stephanie Sutton <ssutton@edafl.com>
Cc: Sergio Reyes <sreyes@edafl.com>; Melissa Watson <mwatson@edafl.com>
Subject: Re: Completeness Review Letter for Holiday Inn Site Plan Application

Stephanie,

Yes, all the materials are available here. If you give me some heads up the person could use our conference room.

As for the date, we can do the 21st or 22nd the next week, but this reduces the amount of time you all have to address any DRT comments and resubmit (resubmittal deadline is December 5th in order to get on the January PZB agenda).

Adam Hall

From: "Stephanie Sutton" <ssutton@edafl.com>
To: "Adam Hall" <ad_hall@cityofalachua.org>, "Sergio Reyes" <sreyes@edafl.com>
Cc: "Melissa Watson" <mwatson@edafl.com>
Sent: Friday, November 4, 2016 11:51:46 AM
Subject: RE: Completeness Review Letter for Holiday Inn Site Plan Application

Adam,

What other days/times are available for a DRT meeting? We have a conflict on 11/17.

Do you have all of the materials at your office and could we just send someone up to combine them into the appropriate package of materials?

Stephanie

Stephanie Sutton
Project Manager
SSutton@edafl.com
eda engineers-surveyors-planners, inc.

2404 NW 43rd Street
Gainesville, FL 32606
(352) 373-3541
www.edafl.com

From: Adam Hall [mailto:ad_hall@cityofalachua.org]
Sent: Thursday, November 3, 2016 10:46 AM
To: Sergio Reyes <sreyes@edafl.com>
Cc: Stephanie Sutton <ssutton@edafl.com>
Subject: Completeness Review Letter for Holiday Inn Site Plan Application

Sergio,

Please see the attached letter in reference to the submitted site plan application for Holiday Inn.

Will November 17, 2016 at 2 PM work for a DRT meeting?

Also, we will need to have the resubmitted application materials and original application combined by 12 PM on Monday so that we can distribute complete and updated proposed site plans to all DRT members.

Thank you!
--
Adam Hall, AICP | Planner | Office of Planning and Community Development
City of Alachua | ahall@cityofalachua.com | Phone: 386.418.6121 | Direct: 386.418.6125

---

image003.jpg
7 KB

image004.jpg
7 KB

image002.jpg
7 KB

From : Adam Hall <ad_hall@cityofalachua.org>

Mon, Nov 07, 2016 08:25 AM

Holiday Inn Alachua

2 attachments

Subject : Re: Completeness Review Letter for Holiday Inn Site Plan Application

To : Stephanie Sutton <ssutton@edafl.com>

Cc : Sergio Reyes <sreyes@edafl.com>, Melissa Watson <mwatson@edafl.com>

Anytime, 9 AM to 11 AM.

Adam H

From: "Stephanie Sutton" <ssutton@edafl.com>
To: "Adam Hall" <ad_hall@cityofalachua.org>
Cc: "Sergio Reyes" <sreyes@edafl.com>, "Melissa Watson" <mwatson@edafl.com>
Sent: Monday, November 7, 2016 8:08:36 AM
Subject: RE: Completeness Review Letter for Holiday Inn Site Plan Application

Great. Melissa from our office will come up this morning to put everything together. Can you let us know what time would be best?

We are available anytime on the 21st for DRT. Can we get the comments ahead of the meeting?

Stephanie

Stephanie Sutton
Project Manager
SSutton@edafl.com
eda engineers-surveyors-planners, inc.
2404 NW 43rd Street
Gainesville, FL 32606
(352) 373-3541
www.edafl.com

From: Adam Hall [mailto:ad_hall@cityofalachua.org]
Sent: Monday, November 7, 2016 7:36 AM
To: Stephanie Sutton <ssutton@edafl.com>
Cc: Sergio Reyes <sreyes@edafl.com>; Melissa Watson <mwatson@edafl.com>
Subject: Re: Completeness Review Letter for Holiday Inn Site Plan Application

Stephanie,

Yes, all the materials are available here. If you give me some heads up the person could use our conference room.

As for the date, we can do the 21st or 22nd the next week, but this reduces the amount of time you all have to address any DRT comments and resubmit (resubmittal deadline is December 5th in order to get on the January PZB agenda).

Adam Hall

From: "Stephanie Sutton" <ssutton@edafl.com>
To: "Adam Hall" <ad_hall@cityofalachua.org>, "Sergio Reyes" <sreyes@edafl.com>
Cc: "Melissa Watson" <mwatson@edafl.com>
Sent: Friday, November 4, 2016 11:51:46 AM

Subject: RE: Completeness Review Letter for Holiday Inn Site Plan Application

Adam,

What other days/times are available for a DRT meeting? We have a conflict on 11/17.

Do you have all of the materials at your office and could we just send someone up to combine them into the appropriate package of materials?

Stephanie

Stephanie Sutton
Project Manager
SSutton@edafl.com
eda engineers-surveyors-planners, inc.
2404 NW 43rd Street
Gainesville, FL 32606
(352) 373-3541
www.edafl.com

From: Adam Hall [mailto:ad_hall@cityofalachua.org]
Sent: Thursday, November 3, 2016 10:46 AM
To: Sergio Reyes <sreyes@edafl.com>
Cc: Stephanie Sutton <ssutton@edafl.com>
Subject: Completeness Review Letter for Holiday Inn Site Plan Application

Sergio,

Please see the attached letter in reference to the submitted site plan application for Holiday Inn.

Will November 17, 2016 at 2 PM work for a DRT meeting?

Also, we will need to have the resubmitted application materials and original application combined by 12 PM on Monday so that we can distribute complete and updated proposed site plans to all DRT members.

Thank you!
--
Adam Hall, AICP | Planner | Office of Planning and Community Development
City of Alachua | ahall@cityofalachua.com | Phone: 386.418.6121 | Direct: 386.418.6125

image003.jpg
7 KB

image002.jpg
7 KB

From : Stephanie Sutton <ssutton@edafl.com>

Mon, Nov 07, 2016 08:08 AM

Holiday Inn Alachua

2 attachments

Subject : RE: Completeness Review Letter for Holiday Inn Site Plan Application

To : Adam Hall <ad_hall@cityofalachua.org>

Cc : Sergio Reyes <sreyes@edafl.com>, Melissa Watson <mwatson@edafl.com>

Great. Melissa from our office will come up this morning to put everything together. Can you let us know what time would be best?

We are available anytime on the 21st for DRT. Can we get the comments ahead of the meeting?

Stephanie

Stephanie Sutton
Project Manager
SSutton@edafl.com
eda engineers-surveyors-planners, inc.
2404 NW 43rd Street
Gainesville, FL 32606
(352) 373-3541
www.edafl.com

From: Adam Hall [mailto:ad_hall@cityofalachua.org]
Sent: Monday, November 7, 2016 7:36 AM
To: Stephanie Sutton <ssutton@edafl.com>
Cc: Sergio Reyes <sreyes@edafl.com>; Melissa Watson <mwatson@edafl.com>
Subject: Re: Completeness Review Letter for Holiday Inn Site Plan Application

Stephanie,

Yes, all the materials are available here. If you give me some heads up the person could use our conference room.

As for the date, we can do the 21st or 22nd the next week, but this reduces the amount of time you all have to address any DRT comments and resubmit (resubmittal deadline is December 5th in order to get on the January PZB agenda).

Adam Hall

From: "Stephanie Sutton" <ssutton@edafl.com>
To: "Adam Hall" <ad_hall@cityofalachua.org>, "Sergio Reyes" <sreyes@edafl.com>
Cc: "Melissa Watson" <mwatson@edafl.com>
Sent: Friday, November 4, 2016 11:51:46 AM
Subject: RE: Completeness Review Letter for Holiday Inn Site Plan Application

Adam,

What other days/times are available for a DRT meeting? We have a conflict on 11/17.

Do you have all of the materials at your office and could we just send someone up to combine them into the appropriate package of materials?

Stephanie

Stephanie Sutton
Project Manager
SSutton@edafl.com
eda engineers-surveyors-planners, inc.

2404 NW 43rd Street
Gainesville, FL 32606
(352) 373-3541
www.edafl.com

From: Adam Hall [mailto:ad_hall@cityofalachua.org]
Sent: Thursday, November 3, 2016 10:46 AM
To: Sergio Reyes <sreyes@edafl.com>
Cc: Stephanie Sutton <ssutton@edafl.com>
Subject: Completeness Review Letter for Holiday Inn Site Plan Application

Sergio,

Please see the attached letter in reference to the submitted site plan application for Holiday Inn.

Will November 17, 2016 at 2 PM work for a DRT meeting?

Also, we will need to have the resubmitted application materials and original application combined by 12 PM on Monday so that we can distribute complete and updated proposed site plans to all DRT members.

Thank you!
--
Adam Hall, AICP | Planner | Office of Planning and Community Development
City of Alachua | ahall@cityofalachua.com | Phone: 386.418.6121 | Direct: 386.418.6125

---

image002.jpg
7 KB

image003.jpg
7 KB

From : Adam Hall <ad_hall@cityofalachua.org>
Subject : Re: Completeness Review Letter for Holiday Inn Site Plan Application

Mon, Nov 07, 2016 07:36 AM
Holiday Inn Alachua
1 attachment

To : Stephanie Sutton <ssutton@edafl.com>

Cc : Sergio Reyes <sreyes@edafl.com>, Melissa Watson <mwatson@edafl.com>

Stephanie,

Yes, all the materials are available here. If you give me some heads up the person could use our conference room.

As for the date, we can do the 21st or 22nd the next week, but this reduces the amount of time you all have to address any DRT comments and resubmit (resubmittal deadline is December 5th in order to get on the January PZB agenda).

Adam Hall

From: "Stephanie Sutton" <ssutton@edafl.com>
To: "Adam Hall" <ad_hall@cityofalachua.org>, "Sergio Reyes" <sreyes@edafl.com>
Cc: "Melissa Watson" <mwatson@edafl.com>
Sent: Friday, November 4, 2016 11:51:46 AM
Subject: RE: Completeness Review Letter for Holiday Inn Site Plan Application

Adam,

What other days/times are available for a DRT meeting? We have a conflict on 11/17.

Do you have all of the materials at your office and could we just send someone up to combine them into the appropriate package of materials?

Stephanie

Stephanie Sutton
Project Manager
SSutton@edafl.com

eda engineers-surveyors-planners, inc.
2404 NW 43rd Street
Gainesville, FL 32606
(352) 373-3541
www.edafl.com

From: Adam Hall [mailto:ad_hall@cityofalachua.org]
Sent: Thursday, November 3, 2016 10:46 AM
To: Sergio Reyes <sreyes@edafl.com>
Cc: Stephanie Sutton <ssutton@edafl.com>
Subject: Completeness Review Letter for Holiday Inn Site Plan Application

Sergio,

Please see the attached letter in reference to the submitted site plan application for Holiday Inn.

Will November 17, 2016 at 2 PM work for a DRT meeting?

Also, we will need to have the resubmitted application materials and original application combined by 12 PM on Monday so that we can distribute complete and updated proposed site plans to all DRT members.

Thank you!
--
Adam Hall, AICP | Planner | Office of Planning and Community Development
City of Alachua | ahall@cityofalachua.com | Phone: 386.418.6121 | Direct: 386.418.6125

image002.jpg
7 KB

From : Stephanie Sutton <ssutton@edafl.com>

Fri, Nov 04, 2016 11:51 AM

Holiday Inn Alachua

Subject : RE: Completeness Review Letter for Holiday Inn Site Plan Application

1 attachment

To : Adam Hall <ad_hall@cityofalachua.org>, Sergio Reyes <sreyes@edafl.com>

Cc : Melissa Watson <mwatson@edafl.com>

Adam,

What other days/times are available for a DRT meeting? We have a conflict on 11/17.

Do you have all of the materials at your office and could we just send someone up to combine them into the appropriate package of materials?

Stephanie

Stephanie Sutton
Project Manager
SSutton@edafl.com
eda engineers-surveyors-planners, inc.
2404 NW 43rd Street
Gainesville, FL 32606
(352) 373-3541
www.edafl.com

From: Adam Hall [mailto:ad_hall@cityofalachua.org]
Sent: Thursday, November 3, 2016 10:46 AM
To: Sergio Reyes <sreyes@edafl.com>
Cc: Stephanie Sutton <ssutton@edafl.com>
Subject: Completeness Review Letter for Holiday Inn Site Plan Application

Sergio,

Please see the attached letter in reference to the submitted site plan application for Holiday Inn.

Will November 17, 2016 at 2 PM work for a DRT meeting?

Also, we will need to have the resubmitted application materials and original application combined by 12 PM on Monday so that we can distribute complete and updated proposed site plans to all DRT members.

Thank you!
--
Adam Hall, AICP | Planner | Office of Planning and Community Development
City of Alachua | ahall@cityofalachua.com | Phone: 386.418.6121 | Direct: 386.418.6125

---

image002.jpg
7 KB

Re: Table and Room Reservation

From : Kimberly Vermillion <kvermillion@cityofalachua.org>
Subject : Re: Table and Room Reservation
To : Adam Hall <ad_hall@cityofalachua.org>

Mon, Nov 07, 2016 03:00 PM
Holiday Inn Alachua

Adam,

I put you down for the Swick House for November 21st from 1:30 to 3:30 for Conference Room 1.

Kimberly Vermillion
Event Coordinator
P.O. Box 9
Alachua, FL 32616-0009
(386) 418-6157 ext. 186

From: "Adam Hall" <ad_hall@cityofalachua.org>
To: "Kimberly Vermillion" <kvermillion@cityofalachua.org>

Sent: Monday, November 7, 2016 2:35:42 PM
Subject: Table and Room Reservation

Hi Kim,

I dropped off the table in front of the Swick House (entrance to large room). Thank you!

Also, are there are spaces that could accommodate up to 20 people on Monday, the 21st, from about 1:30 PM to 3:30 PM ? We might have a large meeting (or there may only be 4 people), and it looks like the Duke conference center is not available.

Adam H

--
Adam Hall, AICP | Planner | Office of Planning and Community Development
City of Alachua | ahall@cityofalachua.com | Phone: 386.418.6121 | Direct: 386.418.6125

From : Adam Hall <ad_hall@cityofalachua.org>
Subject : Table and Room Reservation
To : Kimberly Vermillion <kvermillion@cityofalachua.org>

Mon, Nov 07, 2016 02:35 PM
Holiday Inn Alachua

Hi Kim,

I dropped off the table in front of the Swick House (entrance to large room). Thank you!

Also, are there are spaces that could accommodate up to 20 people on Monday, the 21st, from about 1:30 PM to 3:30 PM ? We might have a

large meeting (or there may only be 4 people), and it looks like the Duke conference center is not available.

Adam H

--
Adam Hall, AICP | Planner | Office of Planning and Community Development
City of Alachua | ahall@cityofalachua.com | Phone: 386.418.6121 | Direct: 386.418.6125

RE: ERP permit application for Holiday Inn

From : Sergio Reyes <sreyes@edafl.com> Wed, Nov 02, 2016 07:44 PM
Subject : RE: ERP permit application for Holiday Inn
Holiday Inn Alachua
2 attachments
To : Adam Hall <ad_hall@cityofalachua.org>, Stephanie Sutton <ssutton@edafl.com>
Cc : Meagan Dickey <mdickey@edafl.com>

Adam:

No design changes at this time

Sergio Reyes, P.E.
President
SReyes@edafl.com
eda engineers-surveyors-planners, inc.
2404 NW 43rd Street
Gainesville, FL 32606
(352) 373-3541

www.edafl.com

From: Adam Hall [mailto:ad_hall@cityofalachua.org]
Sent: Wednesday, November 2, 2016 2:48 PM
To: Stephanie Sutton <ssutton@edafl.com>
Cc: Sergio Reyes <sreyes@edafl.com>; Meagan Dickey <mdickey@edafl.com>
Subject: Re: ERP permit application for Holiday Inn

Unless, the proposed design is going to change then we can wait until resubmittal.

Thank you,

Adam Hall
City of Alachua

From: "Stephanie Sutton" <ssutton@edafl.com>
To: "Adam Hall" <ad_hall@cityofalachua.org>
Cc: "Sergio Reyes" <sreyes@edafl.com>, "Meagan Dickey" <mdickey@edafl.com>
Sent: Wednesday, November 2, 2016 8:20:26 AM
Subject: ERP permit application for Holiday Inn

Good morning Adam,

We had initially submitted a 10-2 application for the Holiday Inn, but the WMD asked us to complete a full application for the site since it was part of an existing permit. Please see attached.
Would you like us to bring you hard copies for the application package now or wait until the next resubmittal?

Stephanie

Stephanie Sutton
Project Manager

SSutton@edafl.com
eda engineers-surveyors-planners, inc.
2404 NW 43rd Street
Gainesville, FL 32606
(352) 373-3541
www.edafl.com

---

image002.jpg
7 KB

image003.jpg
7 KB

From : Adam Hall <ad_hall@cityofalachua.org>
Subject : Re: ERP permit application for Holiday Inn
To : Stephanie Sutton <ssutton@edafl.com>
Cc : Sergio Reyes <sreyes@edafl.com>, Meagan Dickey <mdickey@edafl.com>

Wed, Nov 02, 2016 02:47 PM
Holiday Inn Alachua
1 attachment

Unless, the proposed design is going to change then we can wait until resubmittal.

Thank you,

Adam Hall
City of Alachua

From: "Stephanie Sutton" <ssutton@edafl.com>
To: "Adam Hall" <ad_hall@cityofalachua.org>
Cc: "Sergio Reyes" <sreyes@edafl.com>, "Meagan Dickey" <mdickey@edafl.com>
Sent: Wednesday, November 2, 2016 8:20:26 AM
Subject: ERP permit application for Holiday Inn

Good morning Adam,

We had initially submitted a 10-2 application for the Holiday Inn, but the WMD asked us to complete a full application for the site since it was part of an existing permit. Please see attached.
Would you like us to bring you hard copies for the application package now or wait until the next resubmittal?

Stephanie

Stephanie Sutton
Project Manager
SSutton@edafl.com
eda engineers-surveyors-planners, inc.
2404 NW 43rd Street
Gainesville, FL 32606
(352) 373-3541
www.edafl.com

image003.jpg
7 KB

From : Stephanie Sutton <ssutton@edafl.com>
Subject : ERP permit application for Holiday Inn
To : Adam Hall <ad_hall@cityofalachua.org>
Cc : Sergio Reyes <sreyes@edafl.com>, Meagan Dickey <mdickey@edafl.com>

Wed, Nov 02, 2016 08:20 AM
Holiday Inn Alachua
2 attachments

Good morning Adam,

We had initially submitted a 10-2 application for the Holiday Inn, but the WMD asked us to complete a full application for the site since it was part of an existing permit. Please see attached.
Would you like us to bring you hard copies for the application package now or wait until the next resubmittal?

Stephanie

Stephanie Sutton
Project Manager
SSutton@edafl.com
eda engineers-surveyors-planners, inc.
2404 NW 43rd Street
Gainesville, FL 32606
(352) 373-3541
www.edafl.com

image003.jpg
7 KB

SRWMD_ERPApplication_HolidayInnAlachua.pdf
453 KB

Holiday Inn - Letter request to address insufficiency

From : Stephanie Sutton <ssutton@edafl.com>
Subject : Holiday Inn - Letter request to address insufficiency
To : Scott Roane <sroane@cityofalachua.org>
Cc : Harry Dillard <hdillard@cityofalachua.org>, Adam Hall <ad_hall@cityofalachua.org>, Sergio Reyes <sreyes@edafl.com>

Wed, Oct 26, 2016 08:25 AM
Holiday Inn Alachua
2 attachments

Good morning Scott,

I would like to request a letter from you to respond to insufficiency comment #6 for the Holiday Inn project. The developer, Randy Gibbons of MPH Hotels, has spoken with the city about getting a letter indicating the time that water is projected to be available from the new water main extension to avoid having to install a tank.

I have attached our water meter calculations.

6. **Required Attachment 3**: Fire Department Access and Water Supply Plan.
Action Needed to Address Deficiency: Please provide documentation from the local water purveyor (City of Alachua Public Services) verifying required flow can be provided at proposed development site.

Please let me know if you have any questions.

Stephanie

Stephanie Sutton
Project Manager
SSutton@edafl.com
eda engineers-surveyors-planners, inc.
2404 NW 43rd Street
Gainesville, FL 32606
(352) 373-3541
www.edafl.com

---

image003.jpg
9 KB

Holiday Inn Water Calculations.pdf
1 MB

Accept: Planning Items - Completeness Review Comments Meeting

---

From : Justin Tabor <jtabor@cityofalachua.org>
Subject : Accept: Planning Items - Completeness Review Comments Meeting

Thu, Oct 20, 2016 04:39 PM
Holiday Inn Alachua
1 attachment

To : ad hall <ad_hall@cityofalachua.org>

Subject: Planning Items - Completeness Review Comments Meeting
Organizer: ad_hall@cityofalachua.org

Location: City Manager's Conference Room
Time: Thursday, October 27, 2016, 10:00:00 AM - 11:30:00 AM GMT -05:00 US/Canada Eastern

Invitees: ad_boukari@cityofalachua.org; ju_tabor@cityofalachua.org; ka_winburn@cityofalachua.org; wi_whitelock@cityofalachua.org

~~*~*~*~*~*~*~*~*

Yes, I will attend.

---

meeting.ics
2 KB

From : Adam Boukari <aboukari@cityofalachua.org>
Subject : Accept: Planning Items - Completeness Review Comments Meeting
To : ad hall <ad_hall@cityofalachua.org>

Thu, Oct 20, 2016 03:58 PM
Holiday Inn Alachua
1 attachment

Subject: Planning Items - Completeness Review Comments Meeting
Organizer: ad_hall@cityofalachua.org

Location: City Manager's Conference Room

Time: Thursday, October 27, 2016, 10:00:00 AM - 11:30:00 AM GMT -05:00 US/Canada Eastern

Invitees: ad_boukari@cityofalachua.org; ju_tabor@cityofalachua.org; ka_winburn@cityofalachua.org; wi_whitelock@cityofalachua.org

~~*~*~*~*~*~*~*~*

Yes, I will attend.

---

meeting.ics
2 KB

From : Adam Hall <ad_hall@cityofalachua.org>

Thu, Oct 20, 2016 03:56 PM

Holiday Inn Alachua

1 attachment

Subject : Planning Items - Completeness Review Comments Meeting

To : Adam Boukari <ad_boukari@cityofalachua.org>, Justin Tabor <ju_tabor@cityofalachua.org>, Kathy Winburn <ka_winburn@cityofalachua.org>, William P. Whitelock <wi_whitelock@cityofalachua.org>

```
The following meeting has been modified:

Subject: Planning Items - Completeness Review Comments
Meeting
Organizer: "Adam Hall" <ad_hall@cityofalachua.org>

Location: City Manager's Conference Room
```

From : Adam Hall <ad_hall@cityofalachua.org>

Wed, Oct 19, 2016 02:42 PM

Holiday Inn Alachua

1 attachment

Subject : Holiday Inn Completeness Review Comments Meeting

To : Adam Boukari <ad_boukari@cityofalachua.org>, Justin Tabor <ju_tabor@cityofalachua.org>, Kathy Winburn <ka_winburn@cityofalachua.org>

The following is a new meeting request:

Subject: Holiday Inn Completeness Review Comments Meeting
Organizer: "Adam Hall" <ad_hall@cityofalachua.org>

Location: City Manager's Conference Room
Time: Thursday, October 27, 2016, 11:00:00 AM - 12:30:00 PM GMT -05:00 US/Canada Eastern

Invitees: ad_boukari@cityofalachua.org; ju_tabor@cityofalachua.org; ka_winburn@cityofalachua.org

~~*~*~*~*~*~*~*~*

---

meeting.ics
2 KB

RE: Completeness Review for Holiday Inn Alachua Site Plan Application

---

From : Stephanie Sutton <ssutton@edafl.com>

Wed, Oct 19, 2016 10:26 AM

Holiday Inn Alachua

2 attachments

Subject : RE: Completeness Review for Holiday Inn Alachua Site Plan Application

To : Adam Hall <ad_hall@cityofalachua.org>

That is good for us. Thank you for setting this up!

Stephanie Sutton
Project Manager
SSutton@edafl.com
eda engineers-surveyors-planners, inc.
2404 NW 43rd Street
Gainesville, FL 32606
(352) 373-3541
www.edafl.com

From: Adam Hall [mailto:ad_hall@cityofalachua.org]
Sent: Tuesday, October 18, 2016 3:46 PM
To: Stephanie Sutton <ssutton@edafl.com>
Subject: Re: Completeness Review for Holiday Inn Alachua Site Plan Application

Stephanie,

Next Thursday (the 27th) at 11 AM , Adam Boukari is available.

Adam H

From: "Adam Hall" <ad_hall@cityofalachua.org>
To: "Stephanie Sutton" <ssutton@edafl.com>
Sent: Tuesday, October 18, 2016 3:36:01 PM
Subject: Re: Completeness Review for Holiday Inn Alachua Site Plan Application

Stephanie, I will go look into this now.

Adam

From: "Stephanie Sutton" <ssutton@edafl.com>
To: "Adam Hall" <ad_hall@cityofalachua.org>
Sent: Tuesday, October 18, 2016 2:02:35 PM
Subject: RE: Completeness Review for Holiday Inn Alachua Site Plan Application

Adam,

Unfortunately our client won't be able to make it at that time…can you look at next Wednesday and Thursday?

Stephanie

Stephanie Sutton
Project Manager
SSutton@edafl.com
eda engineers-surveyors-planners, inc.
2404 NW 43rd Street
Gainesville, FL 32606
(352) 373-3541
www.edafl.com

From: Adam Hall [mailto:ad_hall@cityofalachua.org]
Sent: Tuesday, October 18, 2016 12:21 PM
To: Stephanie Sutton <ssutton@edafl.com>
Subject: Re: Completeness Review for Holiday Inn Alachua Site Plan Application

Stephanie,

Would this Thursday at 3 PM work for you and your client?

Adam H

From: "Adam Hall" <ad_hall@cityofalachua.org>
To: "Stephanie Sutton" <ssutton@edafl.com>
Cc: "Sergio Reyes" <sreyes@edafl.com>
Sent: Tuesday, October 18, 2016 7:34:33 AM
Subject: Re: Completeness Review for Holiday Inn Alachua Site Plan Application

Stephanie,

I will coordinate with Adam Boukari's office today and see if he is available to meet later this week.

Thank you,

Adam Hall

From: "Stephanie Sutton" <ssutton@edafl.com>
To: "Adam Hall" <ad_hall@cityofalachua.org>
Cc: "Sergio Reyes" <sreyes@edafl.com>
Sent: Monday, October 17, 2016 8:45:02 AM
Subject: RE: Completeness Review for Holiday Inn Alachua Site Plan Application

Hi Adam,

Following up on my phone message, we would like to schedule a meeting with you to discuss our resubmittal for this project. The owner has discussed some of the items with Adam Boukari and we want to be sure everyone is on the same page. Please let me know when you are available this week.

Stephanie

Stephanie Sutton
Project Manager
SSutton@edafl.com
eda engineers-surveyors-planners, inc.
2404 NW 43rd Street
Gainesville, FL 32606
(352) 373-3541
www.edafl.com

From: Adam Hall [mailto:ad_hall@cityofalachua.org]
Sent: Thursday, October 6, 2016 3:19 PM
To: Stephanie Sutton <ssutton@edafl.com>
Cc: Sergio Reyes <sreyes@edafl.com>
Subject: Completeness Review for Holiday Inn Alachua Site Plan Application

Stephanie,

Please see the attached letter regarding the completeness review of the application for Holiday Inn Alachua Site Plan.

If you have any questions, or need any clarification on any item please do not hesitate to contact me.
Thank you,

Hi Adam,

Following up on my phone message, we would like to schedule a meeting with you to discuss our resubmittal for this project. The owner has discussed some of the items with Adam Boukari and we want to be sure everyone is on the same page. Please let me know when you are available this week.

Stephanie

Stephanie Sutton
Project Manager
SSutton@edafl.com
eda engineers-surveyors-planners, inc.

2404 NW 43rd Street
Gainesville, FL 32606
(352) 373-3541
www.edafl.com

From: Adam Hall [mailto:ad_hall@cityofalachua.org]
Sent: Thursday, October 6, 2016 3:19 PM
To: Stephanie Sutton <ssutton@edafl.com>
Cc: Sergio Reyes <sreyes@edafl.com>
Subject: Completeness Review for Holiday Inn Alachua Site Plan Application

Stephanie,

Please see the attached letter regarding the completeness review of the application for Holiday Inn Alachua Site Plan.

If you have any questions, or need any clarification on any item please do not hesitate to contact me. Thank you,

--
Adam Hall, AICP | Planner | Office of Planning and Community Development
City of Alachua | ahall@cityofalachua.com | Phone: 386.418.6121 | Direct: 386.418.6125

---

image002.jpg
7 KB

From : Stephanie Sutton <ssutton@edafl.com>

Tue, Oct 18, 2016 02:02 PM

Holiday Inn Alachua

1 attachment

Subject : RE: Completeness Review for Holiday Inn Alachua Site Plan Application

To : Adam Hall <ad_hall@cityofalachua.org>

Adam,

Unfortunately our client won't be able to make it at that time…can you look at next Wednesday and Thursday?

Stephanie

Stephanie Sutton
Project Manager
SSutton@edafl.com
eda engineers-surveyors-planners, inc.
2404 NW 43rd Street
Gainesville, FL 32606
(352) 373-3541
www.edafl.com

From: Adam Hall [mailto:ad_hall@cityofalachua.org]
Sent: Tuesday, October 18, 2016 12:21 PM
To: Stephanie Sutton <ssutton@edafl.com>
Subject: Re: Completeness Review for Holiday Inn Alachua Site Plan Application

Stephanie,

Would this Thursday at 3 PM work for you and your client?

Adam H

From: "Adam Hall" <ad_hall@cityofalachua.org>
To: "Stephanie Sutton" <ssutton@edafl.com>
Cc: "Sergio Reyes" <sreyes@edafl.com>
Sent: Tuesday, October 18, 2016 7:34:33 AM
Subject: Re: Completeness Review for Holiday Inn Alachua Site Plan Application

Stephanie,

I will coordinate with Adam Boukari's office today and see if he is available to meet later this week.

Thank you,

Adam Hall

From: "Stephanie Sutton" <ssutton@edafl.com>
To: "Adam Hall" <ad_hall@cityofalachua.org>
Cc: "Sergio Reyes" <sreyes@edafl.com>
Sent: Monday, October 17, 2016 8:45:02 AM
Subject: RE: Completeness Review for Holiday Inn Alachua Site Plan Application

Hi Adam,

Following up on my phone message, we would like to schedule a meeting with you to discuss our resubmittal for this project. The owner has discussed some of the items with Adam Boukari and we want to be sure everyone is on the same page. Please let me know when you are available this week.

Stephanie

Stephanie Sutton
Project Manager
SSutton@edafl.com
eda engineers-surveyors-planners, inc.

2404 NW 43rd Street
Gainesville, FL 32606
(352) 373-3541
www.edafl.com

From: Adam Hall [mailto:ad_hall@cityofalachua.org]
Sent: Thursday, October 6, 2016 3:19 PM
To: Stephanie Sutton <ssutton@edafl.com>
Cc: Sergio Reyes <sreyes@edafl.com>
Subject: Completeness Review for Holiday Inn Alachua Site Plan Application

Stephanie,

Please see the attached letter regarding the completeness review of the application for Holiday Inn Alachua Site Plan.

If you have any questions, or need any clarification on any item please do not hesitate to contact me.

City of ALACHUA

THE GOOD LIFE COMMUNITY

FOR PLANNING USE ONLY
Case #:
Application Fee: $
Filing Date:
Acceptance Date:
Review Type: P&Z

Site Plan Application

Reference City of Alachua Land Development Regulations Article 2.4.9

A. PROJECT

1. Project Name: Holiday Inn
2. Address of Subject Property: 16139 NW Hwy 441 Alachua, FL 32615
3. Parcel ID Number(s): 03053-001-001
4. Existing Use of Property: Vacant
5. Future Land Use Map Designation : Commercial
6. Zoning Designation: Commercial, Intensive (CI)
7. Acreage: 4.24 Acres

B. APPLICANT

1. Applicant's Status ☐ Owner (title holder) ☒ Agent
2. Name of Applicant(s) or Contact Person(s): Sergio Reyes, P.E. Title: President
   Company (if applicable): eda engineers-surveyors-planners, inc.
   Mailing address: 2404 NW 43rd St
   City: Gainesville State: FL ZIP: 32606
   Telephone: 352-373-3541 FAX: 352-373-7249 e-mail: sreyes@edafl.com
3. If the applicant is agent for the property owner*:
   Name of Owner (title holder): Hipp Investments, LLC
   Mailing Address: 14610 NW 129th Terrace
   City: Alachua State: FL ZIP: 32615

   * Must provide executed Property Owner Affidavit authorizing the agent to act on behalf of the property owner.

C. ADDITIONAL INFORMATION

1. Is there any additional contact for sale of, or options to purchase, the subject property? ☒ Yes ☐ No
   If yes, list names of all parties involved: MPH Hotels
   If yes, is the contract/option contingent or absolute? ☐ Contingent ☒ Absolute

D. ATTACHMENTS

1. Site Plan including but not limited to:
   a. Name, location, owner, and designer of the proposed development.
   b. Zoning of the subject property.
   c. Vicinity map - indicating general location of the site and all abutting streets and properties.
   d. Complete legal description.
   e. Statement of Proposed Uses.
   f. Location of the site in relation to adjacent properties, including the means of ingress and egress to such properties and any screening or buffers along adjacent properties.
   g. Date, north arrow, and graphic scale (not to exceed one (1) inch equal to fifty (50) feet.)
   h. Area and dimensions of site.
   i. Location of all property lines, existing right-of-way approaches, sidewalks, curbs, and gutters.
   j. Access and points of connection to utilities (electric, potable water, sanitary sewer, gas, etc.)
   k. Location and dimensions of all existing and proposed parking areas and loading areas.
   l. Location, size, and design of proposed landscaped areas (including existing trees and required landscaped buffer areas) with detail illustrating compliance with Section 6.2.2 of the Land Development Regulations.

m. Location and size of any lakes, ponds, canals, or other waters and waterways.
n. Structures and major features – fully dimensioned – including setbacks, distances between structures, floor area, width of driveways, parking spaces, property or lot lines, and floor area ratio.
o. Location of waste receptacles and detail of waste receptacle screening.
p. For development consisting of a nonresidential use, except for single tenant retail sales and services uses greater than or equal to 20,000 square feet in area and except for use types within the industrial services, manufacturing and production, warehouse freight and movement, waste-related services, and wholesale sales use categories:
    i. Architectural plans and dimension plans which demonstrate compliance with the design standards for business uses as provided in Section 6.8.2 of the LDRs, including:
        (a) Calculation of glazing of the front façade.
        (b) Calculation of the area of ground floor façades subject to glazing.
        (c) Detail on the architectural plans and dimension plans depicting façade massing and/or alternatives to required façade massing.
        (d) Sufficient plan detail and calculations of each material utilized in each façade.
q. For development consisting of a nonresidential use where a single tenant is greater than or equal to 20,000 square feet in area:
    i. Architectural plans and dimension plans which demonstrate compliance with the design standards for single tenant retail sales and service uses greater than or equal to 20,000 square feet in area as provided in Section 6.8.3 of the LDRs, including:
        (a) Calculation of glazing of the façades facing streets, residential uses, and vacant residential/agricultural land.
        (b) Calculation of the area of ground floor façades subject to glazing.
        (c) If glazing alternatives are used, calculation of area of alternative materials used.
        (d) Detail on the architectural plans and dimension plans depicting façade massing and/or alternatives to required façade massing.
        (e) Color architectural plans depicting the color of all materials used in the façade.
r. For development consisting of one or more of the following: Multi-family residential; Hotel; or Mobile Home Park:
    i. Tabulation of gross acreage.
    ii. Tabulation of density.
    iii. Number of dwelling units proposed.
    iv. Location and percent of total open space and recreation areas.
    v. Floor area of dwelling units.
    vi. Number of proposed parking spaces.
    vii. Street layout.
    viii. Layout of mobile home stands (for mobile home parks only).
    ix. City of Alachua Public School Student Generation Form.

Sheet Size: 24" X 36" with 3" left margin and ½" top, bottom, and right margins

2. Stormwater management plan - including the following:

    a. Existing contours at one (1) foot intervals based on U.S. Coastal and Geodetic Datum.
    b. Proposed finished floor elevation of each building site.
    c. Existing and proposed stormwater management facilities with size and grades.
    d. Proposed orderly disposal of surface water runoff.
    e. Centerline elevations along adjacent streets.
    f. Water Management District surfacewater management Statement of proposed uses on the site plan

3. Fire Department Access and Water Supply: The design criteria shall be Chapter 18 of the Florida Fire Prevention Code. Plans must be on separate sealed sheets and must be prepared by a professional Fire engineer licensed in the State of Florida. Fire flow calculations must be provided for each newly constructed building. When required, fire flow calculations shall be in accordance with the Guide for Determination of Required Fire Flow, latest edition, as published by the Insurance Service Office (ISO) and /or Chapter 18, Section 18.4 of the Florida Fire Prevention Code, whichever is greater. All calculations must be demonstrated and provided. All calculations and specifications must be on the plans and not on separate sheets. All fire protection plans are reviewed and approved by the Alachua County Fire Marshal.

4. Concurrency Impact Analysis showing the impact on public facilities, including potable water, sanitary sewer, transportation, solid waste, recreation, stormwater, and public schools in accordance with Article 2.4.14 of the Land Development Regulations.

5. Analysis of Consistency with the City of Alachua Comprehensive Plan (analysis must identify specific Goals, Objectives, and Policies and describe in detail how the application complies with the noted Goal, Objective, or Policy.)

For commercial project Applications:

a. In addition to submitting specific written information regarding your **commercial** development's compliance with the relevant Goals, Objectives, and Policies of the City of Alachua Comprehensive Plan, you must respond directly to the standards listed below. You should be specific in terms of how your commercial development will comply with these standards.

Policy 1.3.d Design and performance standards

The following criteria shall apply when evaluating commercial development proposals:

1. Integration of vehicular and non-vehicular access into the site and access management features of site in terms of driveway cuts and cross access between adjacent sites, including use of frontage roads and/or shared access;
2. Buffering from adjacent existing/potential uses;
3. Open space provisions and balance of proportion between gross floor area and site size;
4. Adequacy of pervious surface area in terms of drainage requirements;
5. Placement of signage;
6. Adequacy of site lighting and intrusiveness of lighting upon the surrounding area;
7. Safety of on-site circulation patterns (patron, employee and delivery vehicles), including parking layout and drive aisles, and points of conflict;
8. Landscaping, as it relates to the requirements of the Comprehensive Plan and Land Development Regulations;
9. Unique features and resources which may constrain site development, such as soils, existing vegetation and historic significance; and
10. Performance based zoning requirements, which may serve as a substitute for or accompany land development regulations in attaining acceptable site design.
11. Commercial uses shall be limited to an intensity of less than or equal to .50 floor area ratio for parcels 10 acres or greater, .50 floor area ratio for parcels less than 10 acres but 5 acres or greater, a .75 floor area ratio for parcels less than 5 acres but greater than 1 acre, and 1.0 floor area ratio to parcels 1 acre or less.

For industrial project Applications:

b. In addition to submitting specific written information regarding your **industrial** development's compliance with the relevant Goals, Objectives, and Policies of the City of Alachua Comprehensive Plan, you must respond directly to the standards listed below. You should be specific in terms of how your industrial development will comply with these standards.

Policy 1.5.d

The City shall develop performance standards for industrial uses in order to address the following:

1. Integration of vehicular and non-vehicular access into the site and access management features of site in terms of driveway cuts and cross access between adjacent sites, including use of frontage roads and/or shared access;
2. Buffering from adjacent existing/potential uses;
3. Open space provisions and balance of proportion between gross floor area and site size;
4. Adequacy of pervious surface area in terms of drainage requirements;
5. Placement of signage;
6. Adequacy of site lighting and intrusiveness of lighting upon the surrounding area;
7. Safety of on-site circulation patterns (patron, employee and delivery vehicles, trucks), including parking layout and drive aisles, and points of conflict;
8. Landscaping, as it relates to the requirements of the Comprehensive Plan and Land Development Regulations;
9. Unique features and resources which may constrain site development, such as soils, existing vegetation and historic significance; and
10. Performance based zoning requirements that may serve as a substitute for or accompany land development regulations in attaining acceptable site design.
11. Industrial uses shall be limited to an intensity of less than or equal to .50 floor area ratio for parcels 10 acres or greater, .50 floor area ratio for parcels less than 10 acres by 5 acres or greater, .75 floor area ratio for parcels less than 5 acres but greater than 1 acre, and 1.0 floor area ratio for parcels 1 acre or less.

6. *For Site Plans for Buildings Less than 80,000 Square Feet in Area:* One (1) set of labels for all property owners within 400 feet of the subject property boundaries – even if property within 400 feet falls outside of City limits (obtain from the Alachua County Property Appraiser's web site) – and all persons/organizations registered to receive notice of development applications.
   For Site Plans for Buildings Greater than or Equal to 80,000 Square Feet in Area: Two (2) sets of labels for all property owners within 400 feet of the subject property boundaries – even if property within 400 feet falls outside of City limits (obtain from the Alachua County Property Appraiser's web site) – and all persons/organizations registered to receive notice of development applications.

7. Neighborhood Meeting Materials, including:
   i. Copy of the required published notice (advertisement) – must be published a newspaper of general circulation, as defined in Article 10 of the City's Land Development Regulations
   ii. Copy of written notice (letter) sent to all property owners within 400 feet and to all persons/organizations registered with the City to receive notice, and mailing labels or list of those who received written notice
   iii. Written summary of meeting – must include (1) those in attendance; (2) a summary of the issues related to the development proposal discussed; (3) comments by those in attendance about the development proposal; and, (4) any other information deemed appropriate.

8. Legal description with tax parcel number, separate from all other documentation on 8.5" x 11" paper.

9. Proof of ownership (i.e., copy of deed.)

10. Proof of payment of taxes.

11. Environmental Resource Permit (or Letter of Exemption) from the Suwannee River Water Management District or Self-Certification for a Stormwater Management System in Uplands Serving Less than 10 Acres of Total Project Area and Less than 2 Acres of Impervious Surfaces from the Florida Department of Environmental Protection pursuant to Section 403.814(12), Florida Statutes.

12. If access is from a County Road, access management permit from Alachua County Public Works (or documentation providing evidence that a permit application has been submitted).

13. If access is from a State Road, access management permit from Florida Department of Transportation (or documentation providing evidence that a permit application has been submitted).

14. **Fee.** Please see fee schedule for fee determination. No application shall be accepted for processing until the required application fee is paid in full by the applicant. Any necessary technical review or additional reviews of the application beyond the initial engineering review fee will be billed to the applicant at the rate of the reviewing entity. The invoice shall be paid in full prior to any legislative and/or quasi-judicial action of any kind on the petition, appeal, or development application.

All 14 attachments are required for a complete application. A completeness review of the application will be conducted within five (5) business days of receipt. If the application is determined to be incomplete, the application will be returned to the applicant.

I/We certify and acknowledge that the information contained herein is true and correct to the best of my/our knowledge.

Signature of Applicant

Signature of Co-applicant

SERGIO REYES, PRESIDENT

Typed or printed name and title of applicant

Typed or printed name of co-applicant

State of Florida County of Alachua

The foregoing application is acknowledged before me this 29th day of September, 2016, by Sergio Reyes

_____, who is/are personally known to me, or who has/have produced _____

as identification.

NOTARY SEAL DEBBIE WALLEN
Notary Public - State of Florida
My Comm. Expires Jul 22, 2018
Commission # EE 127615

Signature of Notary Public, State of Florida

City of ALACHUA

THE GOOD LIFE COMMUNITY

FOR PLANNING USE ONLY
Case #:
Application Fee: $
Filing Date:
Acceptance Date:
Review Type: Admin

Public School Student Generation Form for Residential Development in the City of Alachua

A. APPLICANT

1. Applicant's Status (check one):

   ☐ Owner (title holder) ■ Agent

2. Name of Applicant(s) or Contact Person(s): Sergio Reyes, P.E. Title: President

   Company (if applicable): eda engineers - surveyors - planners, inc.

   Mailing address: 2404 NW 43rd Street

   City: Gainesville State: FL ZIP: 32606

   Telephone: 373-3541 FAX: 373-7249 e-mail: sreyes@edafl.com

3. If the applicant is agent for the property owner*:

   Name of Owner (title holder): Hipp Investments, LLC

   Mailing Address: 14610 NW 129th Terrace

   City: Alachua State: FL ZIP: 32615

   * Must provide executed Property Owner Affidavit authorizing the agent to act on behalf of the property owner.

B. PROJECT

1. Project Name: Holiday Inn
2. Address of Subject Property: 16139 NW Hwy 441, Alachua, FL 32615
3. Parcel ID Number(s): 03053-001-001
4. Section 09 Township 08 Range 18 Grant N/A Acreage: 4.24 Acres
5. Existing Use of Property: Vacant
6. Future Land Use Map Designation: Commercial
7. Zoning Designation: Commercial, Intensive (CI)
8. Development Data (check all that apply):

   ☐ Single Family Residential Number of Units

   ☐ Multi-Family Residential Number of Units

   ■ Exempt (*see exempt developments on page 2*)

9. Review Type:

Preliminary Development Order	***Final Development Order***
☐ Comprehensive Plan Amendment	☐ Preliminary Plat
☐ Large Scale	☐ Final Plat
☐ Small Scale	■ Site Plan
☐ Site Specific Amendment to the Official Zoning Atlas (Rezoning)	
☐ *Revised*	

10. School Concurrency Service Areas (SCSA): Based on the project location, identify the corresponding SCSA for each school type. Maps of the SCSAs can be obtained from the Alachua County Growth Management Department Map Gallery by clicking on the "Public Schools" tab: http://growth-management.alachuacounty.us/gis_services/map_gallery/

    Elementary: Irby (K-2) and Alachua (3-5)

    Middle: Melbane

    High: Santa Fe High School

Explanation of Student Generation Calculation: Student Generation is calculated based on the type of residential development and the type of schools. The number of students stations (by school type – Elementary, Middle and High School) used for calculating the school concurrency impacts is equal to the number of dwelling units by housing type multiplied by the student generation multiplier (for housing type & school type) established by the School Board. **Calculations are rounded to the nearest whole number.** Student Generation for each school type is calculated individually, in order to correctly assess the impact on the School Concurrency Service Area (SCSA) for each school type (Elementary, Middle and High School).

# of Elementary School Student Stations = # of housing units x Elementary school student generation multiplier
# of Middle School Student Stations = # of housing units x Middle school student generation multiplier
# of High School Student Stations = # of housing units x High school student generation multiplier

Student Generation Calculations: Single Family Residential Development

Elementary School	_____	units	x	_____	Elementary School Multiplier*	_____	Student Stations**
Middle School	_____	units	x	_____	Middle School Multiplier*	_____	Student Stations**
High School	_____	units	x	_____	High School Multiplier*	_____	Student Stations**

Student Generation Calculations: Multi-Family Residential Development

Elementary School	_____	units	x	_____	Elementary School Multiplier*	_____	Student Stations**
Middle School	_____	units	x	_____	Middle School Multiplier*	_____	Student Stations**
High School	_____	units	x	_____	High School Multiplier*	_____	Student Stations**

**** Student generation multipliers may be obtained from SBAC at:***
http://www.sbac.edu/pages/ACPS/Departments_Programs/DepartmentsAF/D_thru_F/FacilitiesMainConstr/Local_Certification_Packets/City_of_Alachua
***** Round to the nearest whole number***

EXEMPT DEVELOPMENTS (check all that apply):

- ☐ Existing legal lots eligible for a building permit.
- ☐ Development that includes residential uses that has received final development plan approval prior to the effective date for public school concurrency, or has received development plan approval prior to June 24, 2008, provided the development approval has not expired.
- ☐ Amendments to final development orders for residential development approved prior to the effective date of public school concurrency, and which do not increase the number of students generated by the development.
- ☐ Age-restricted developments that prohibit permanent occupancy by persons of school age, provided this condition is satisfied in accordance with the standards of the Public Schools Facilities Element or the ILA.
- ☐ Group quarters that do not generate public school students, as described in the ILA.

A completeness review of the application will be conducted within 5 business days of receipt. If the application is determined to be incomplete, the application will be returned to the applicant.

I/We certify and acknowledge that the information contained herein is true and correct to the best of my/our knowledge.

Sergio Reyes

Signature of Applicant

_____

Signature of Co-applicant

SERGIO REYES, PRESIDENT

Typed or printed name and title of applicant

_____

Typed or printed name of co-applicant

State of Florida County of Alachua

The foregoing application is acknowledged before me this 1st day of December, 2016 by Sergio Reyes, who is/are personally known to me, or who has/have produced _____ as identification.

NOTARY SEAL

Stephanie Sutton
NOTARY PUBLIC
STATE OF FLORIDA
Comm# GG040315
Expires 10/19/2020

Stephanie Sutton

Signature of Notary Public, State of Florida

City of ALACHUA

THE GOOD LIFE COMMUNITY

Certification

Alachua County Public Schools

This application for a determination of adequacy of public schools to accommodate the public school students generated by the proposed development has been reviewed for compliance with the school concurrency management program and in accordance with the ILA. The following determinations have been made:

□ **Approved** based upon the following findings:

Elementary SCSA:_____	Capacity Required:_____
□ Capacity Available	Available Capacity:_____
□ Capacity Available in 3 years	Available Capacity:_____
□ Capacity Available in Adjacent SCSA	Available Capacity:_____
Middle SCSA:_____	Capacity Required:_____
□ Capacity Available	Available Capacity:_____
□ Capacity Available in 3 years	Available Capacity:_____
□ Capacity Available in Adjacent SCSA	Available Capacity:_____
High SCSA:_____	Capacity Required:_____
□ Capacity Available	Available Capacity:_____
□ Capacity Available in 3 years	Available Capacity:_____
□ Capacity Available in Adjacent SCSA	Available Capacity:_____

□ **Denied** for reasons stated:_____

_____

_____

□ Local Government Certification

Approved by:_____

Date:_____

□ School Board Staff Certification

_____

Vicki McGrath, Director, Community Planning
School Board of Alachua County
352-955-7400 x 1423

Date:_____

City of ALACHUA

THE GOOD LIFE COMMUNITY

Authorized Agent Affidavit

A. PROPERTY INFORMATION

Address of Subject Property: 16139 NW US HWY 441

Parcel ID Number(s): 03053-001-001

Acreage: 9.5 Acres

B. PERSON PROVIDING AGENT AUTHORIZATION

Name: Virginia Johns Title: Managing Member

Company (if applicable): Hipp Investments, LLC

Mailing Address: 14610 NW 129th Terrace

City: Alachua State: FL ZIP: 32615

Telephone: _____ FAX: _____ e-mail: hipp1000@gmail.com

C. AUTHORIZED AGENT

Name: Sergio Reyes, P.E. Title: President

Company (if applicable): eda engineers-surveyors-planners

Mailing address: 2404 NW 43rd St.

City: Gainesville State: FL ZIP: 32605

Telephone: 352-373-3541 FAX: _____ e-mail: sreyes@edafl.com

D. REQUESTED ACTION:

Lot Split Application and Site Plan Application

I hereby certify that I am the property owner of record, or I have received authorization from the property owner of record to file an application for a development permit related to the property identified above. I authorize the agent listed above to act on my behalf for purposes of this application.

Signature of Applicant

Signature of Co-applicant

Virginia Johns, Managing Member

Typed or printed name and title of applicant

Typed or printed name of co-applicant

State of Florida County of Alachua

The foregoing application is acknowledged before me this 21st day of September, 2014 by Virginia Johns

_____, who is/are personally known to me, or who has/have produced _____ as identification.

Debbie Wallen

Signature of Notary Public, State of Florida

DEBBIE WALLEN
Notary Public - State of Florida
My Comm. Expires Jul 20, 2018
Commission # FF 127615

John Power TAX COLLECTOR Serving Alachua County

2016 Roll Details — Real Estate Account At 16193 NW US HWY 441

Print this page

Real Estate Account #03053 001 001 | Parcel details | **Latest bill** | **Full bill history**

2016	2015	2014	2013	...	2002
PAID	**PAID**	**PAID**	**PAID**		**PAID**

Get Bills by Email

PAID 2016-11-28 $40.27
Receipt #16-0035172

Owner: HIPP INVESTMENTS LLC
14610 NW 129TH TER
ALACHUA, FL 32615
Situs: 16193 NW US HWY 441

Account number: **03053 001 001**
Alternate Key: 1011501
Millage code: 1700
Millage rate: 24.6764

Assessed value: 1,700
School assessed value: 1,700
Unimproved land value: 1,700

Property Appraiser
Location is not guaranteed to be accurate.

2016 Annual bill **View**

Ad valorem: $41.95
Non-ad valorem: $0.00
Total Discountable: 41.95
No Discount NAVA: 0.00
Total tax:

Legal description

COM NW COR SEC S 01 DEG 49 MIN 00 SEC E 1576.08 FT N 88 DEG 33 MIN 13 SEC E 1300.20 FT S 01 DEG 49 MIN 00 SEC E - 1347.44 FT POB S 01 DEG 49 MIN 00 SEC E 1000 FT S 79 DEG 06 MIN 59 SEC E 1279.84 FT N 03 DEG 06 MIN 22 SEC W 1000 - FT N 78 DEG 52 MIN 47 SEC W 1257.95 FT POB (LESS COM NW COR SEC S 1576.08 FT E 1300.20 FT S 2347.44 FT S 79 DEG E - 1022.19 FT POB S 79 DEG E 257.64 FT N 3 DEG W 260.82 FT N 73 DEG W 264.96 FT S 3 DEG E 286.30 FT POB PER OR 2392/782) - (LESS COM NW COR SEC S 1576.08 FT E 1300.20 FT S 1347.44 FT S 1000 FT S 79 DEG E 384.75 FT POB S 79 DEG E 332.33 FT - NLY ALG CURVE 67.22 FT N 74.59 FT NLY ALG CURVE 148.98

Location

Book, page, item: 4076-2345-
Geo number: 09-08-18-03053001001
Range: 18
Township: 08
Section: 09
Neighborhood: 233200.50
Use code: 05500
Total acres: 9.500

Help - Contact us - Terms of service - Tax Collector home

RECORDED IN OFFICIAL RECORDS
INSTRUMENT # 2687010 4 PG(S)
December 29, 2011 11:36:43 AM
Book 4076 Page 2345
J. K. IRBY Clerk Of Circuit Court
ALACHUA COUNTY, Florida

Doc Stamp-Deed: $5,600.00

This instrument was prepared by and upon recording should be returned to
Allison E. Campbell, Esq.
Hill Ward Henderson
101 E. Kennedy Boulevard
Suite 3700
Tampa, Florida 33602

Parcel Identification Number: 03053-001-001

Consideration: $800,000.00
Documentary stamp taxes: $5,600.00

[Space above this line for Recorder's use.]

« SPECIAL WARRANTY DEED »

THIS SPECIAL WARRANTY DEED is made this 28th day of December, 2011, by **CRM FLORIDA PROPERTIES, LLC**, a Georgia limited liability company, whose mailing address is 303 Peachtree Street, N.E., Suite 3600, Atlanta, Georgia 30308, Attention: Legal and Regulatory Affairs Department (the "Grantor"), in favor of **HIPP INVESTMENTS, LLC**, a Delaware limited liability company, whose address is 14610 NW 129th Terrace, Alachua, Florida 32615 (the "Grantee").

W I T N E S S E T H :

That the Grantor, for and in consideration of the sum of Ten Dollars ($10.00) and other good and valuable consideration, to it in hand paid, the receipt whereof is hereby acknowledged, by these presents does grant, bargain, sell, alien, remise, release, convey and confirm unto the Grantee, its successors and assigns forever, those certain parcels of land lying and being in the County of Alachua, State of Florida, as more particularly described on Exhibit "A" hereto.

TOGETHER WITH all the tenements, hereditaments, and appurtenances thereto belonging or in anywise appertaining; and

TO HAVE AND TO HOLD the above described Land, with the appurtenances, unto the said Grantee, its successors and assigns, in fee simple forever.

This conveyance is made subject to (i) the lien of real estate taxes, taxes imposed by special assessment and water, sewer, vault, public space and other public charges which are not yet due and payable, (ii) all applicable laws (including zoning, building ordinances and land use regulations), (iii) all easements, restrictions, covenants, agreements, conditions, and other matters of record (however reference thereto shall not serve to re-impose the same), and (iv) all matters

that may be revealed by a current and accurate survey or inspection of the property (collectively, "Permitted Exceptions").

As against all persons claiming by, through, or under the Grantor, the Grantor covenants that the property is free of all encumbrances except for the Permitted Exceptions, that lawful and good right to convey the foregoing property are vested in the Grantor and that the Grantor fully warrants the title to the property and will defend the same against the lawful claims of all persons claiming by, through, or under the Grantor.

[Signature Page Follows]

[SIGNATURE PAGE TO SPECIAL WARRANTY DEED]

IN WITNESS WHEREOF, Grantor has caused these presents to be duly authorized in its name and by those thereunto duly authorized, the day and year first above written.

SIGNATURE WITNESSED BY:

Kristen Hooks

Name: KRISTEN HOOKS

Christina D Redman

Name: CHRISTINA D. REDMAN

GRANTOR:

CRM FLORIDA PROPERTIES, LLC,
a Georgia limited liability company

By: CRM Properties Manager, LLC,
a Georgia limited liability company, its sole member

By: _____
Daniel Kaiser, Vice President

STATE OF FLORIDA
COUNTY OF Orange

The foregoing instrument was acknowledged before me this 27th day of December, 2011, by Daniel Kaiser as a Vice President of CRM Properties Manager, ~~LLC, a~~ Georgia limited liability company, as the sole member of CRM FLORIDA PROPERTIES, LLC, a Georgia limited liability company, on behalf of such company, who ~~is personally~~ known to me and did not take an oath.

[NOTARY SEAL]

Christina D Redman
Notary Public, State of Florida

Printed Name of Notary Public

My commission expires:

CHRISTINA D. REDMAN
Notary Public - State of Florida
My Comm. Expires Apr 15, 2013
Commission # DD 871153
Bonded Through National Notary Assn.

EXHIBIT A

A PORTION OF SECTION 9, TOWNSHIP 8 SOUTH, RANGE 18 EAST, ALACHUA COUNTY, FLORIDA; BEING MORE PARTICULARLY DESCRIBED AS FOLLOWS:

COMMENCE AT THE NORTHWEST CORNER OF SECTION 9, TOWNSHIP 8 SOUTH, RANGE 18 EAST,ALACHUA COUNTY, FLORIDA, AND RUN THENCE SOUTH 01°49'00" EAST, ALONG THE WEST BOUNDARY OF SAID SECTION, 1576.08 FEET; THENCE NORTH 88°33'13" EAST, 1300.20 FEET TO THE NORTHWEST CORNER OF THAT CERTAIN TRACT OF LAND AS DESCRIBED IN OFFICIAL RECORDS BOOK 503, PAGE 107 OF THE PUBLIC RECORDS OF ALACHUA COUNTY, FLORIDA; THENCE SOUTH 01°49'00" EAST, ALONG THE WEST LINE OF SAID CERTAIN TRACT OF LAND, 1347.44 FEET TO THE POINT OF BEGINNING; THENCE CONTINUE SOUTH 01°49'00" EAST, ALONG SAID WEST LINE, 1000.00 FEET TO A POINT ON THE NORTHERLY RIGHT-OF-WAY LINE OF US. HIGHWAY NO. 441. (STATE ROAD. NOS. 20 AND 25, 200' R/W); THENCE SOUTH 79°06'59" EAST, ALONG SAID RIGHT-OF-WAY LINE, 1279.84 FEET TO A POINT ON THE EAST LINE OF THAT CERTAIN TRACT OF LAND AS DESCRIBED IN OFFICIAL RECORDS BOOK 27, PAGE 296, ET SEQ., OF SAID PUBLIC RECORDS; THENCE NORTH 03°06'22" WEST, ALONG SAID EAST LINE, 1000.00 FEET; THENCE NORTH 78°52'47" WEST, 1257.95 FEET TO THE POINT OF BEGINNING.

LESS AND EXCEPT:

A PORTION OF SECTION 9, TOWNSHIP 8 SOUTH, RANGE 18 EAST, ALACHUA COUNTY, FLORIDA; BEING MORE PARTICULARLY DESCRIBED AS FOLLOWS:

COMMENCE AT THE NORTHWEST CORNER OF SECTION 9, TOWNSHIP 8 SOUTH, RANGE 18 EAST, ALACHUA COUNTY, FLORIDA, AND RUN THENCE SOUTH 01°49'00" EAST, ALONG THE WEST BOUNDARY OF SAID SECTION, 1576.08 FEET; THENCE NORTH 88°33'13" EAST, 1300.20 FEET TO THE NORTHWEST CORNER OF THAT CERTAIN TRACT OF LAND AS DESCRIBED IN OFFICIAL RECORDS BOOK 503, PAGE 107 OF THE PUBLIC RECORDS OF ALACHUA COUNTY, FLORIDA; THENCE SOUTH 01°49'00" EAST, ALONG THE WEST LINE OF SAID CERTAIN TRACT OF LAND, 2347.44 FEET TO A POINT ON THE NORTHERLY RIGHT-OF-WAY LINE OF U.S. HIGHWAY NO. 441 (STATE ROAD NOS. 20 AND 25, 200' R/W); THENCE SOUTH 79° 06'59" EAST, ALONG SAID RIGHT-OF-WAY LINE, 1022.19 FEET TO THE POINT OF BEGINNING; THENCE CONTINUE SOUTH 79°06'59" EAST, ALONG SAID RIGHT-OF-WAY LINE, 257.64 FEET TO A POINT ON THE EAST LINE OF THAT CERTAIN TRACT OF LAND AS DESCRIBED IN OFFICIAL RECORDS BOOK 27, PAGE 296, ET SEQ., OF SAID PUBLIC RECORDS; THENCE NORTH 03°06'22" WEST, ALONG SAID EAST LINE, 260.82 FEET; THENCE NORTH 73°45'46" WEST, 264.96 FEET, THENCE SOUTH 03°06'22" EAST, PARALLEL WITH SAID EAST LINE, 286.30 FEET TO THE POINT OF BEGINNING.

Neighborhood Workshop Notice

For a proposed Development Plan for a hotel located at 16139 US Highway 441.

Date:	September 20, 2016
Time:	6:00 p.m.
Place:	Meeting Room A, Alachua Branch Library 14913 NW 140 Street, Alachua, FL
Contact:	**eda** engineers – surveyors – planners at (352) 373-3541

A neighborhood workshop to discuss a proposed Development Plan for a proposed hotel on a portion of tax parçel number 03053-001-001 located at 16139 US Highway 441. This is not a public hearing. The purpose of this meeting is to inform neighboring property owners of the proposed development and to seek their comments.

engineers • surveyors • planners

engineers • surveyors • planners, inc.

Memorandum

TO: Ken Blake DATE: August 31, 2016

FROM: Stephanie Sutton

SUBJECT: Neighborhood Meeting – Holiday Inn Alachua

PUBLIC NOTICE

A neighborhood workshop to discuss a proposed Development Plan for a proposed hotel on a portion of tax parcel number 03053-001-001 located at 16139 US Highway 441. This is not a public hearing. The purpose of this meeting is to inform neighboring property owners of the proposed development and to seek their comments.

The meeting will be held on Tuesday, September 20, 2016 at 6:00 p.m. in Meeting Room A of the Alachua Branch Library located at 14913 NW 140 Street, Alachua, FL.

Contact: Sergio Reyes, P.E.
eda engineers – surveyors – planners, inc.
(352) 373-3541

RIO 2016 PARALYMPICS

Horse Countries

American and Canadian equestrians train in Marion

By Carlos E. Medina
Correspondent

Marion County's place as an international equestrian center was reinforced this week as it played host to the U.S. and Canadian Paralympic dressage teams.

Both teams made their final preparations here before heading to the Rio 2016 Paralympics, which will run from Sept. 7-18.

For Lauren Barwick of Team Canada, who lives in Reddick year round, the chance to represent her nation is an honor.

Barwick, who was paralyzed from the waist down in 2000 after a bale of hay fell on her, is one of Canada's top equestrian athletes. Rio will be her fourth straight Paralympics. She won gold and silver during the 2008 Beijing Games and hopes for the best in Rio.

"We're always hoping to medal," Barwick said. "I'm on a relatively new horse. I don't know how he's going to fare yet, but the hope is a top three finish."

The team was staying at Hope Hall Farm, where Barwick's coach, Traudel Bongers-Steinebach, is based.

"It's an honor to have the team here for their pre-Rio camp," Bongers-Steinebach said. "We all eat breakfast, lunch and supper together. It's great for team spirit."

A native of Germany, she is versed in classic dressage and has found training with a Paralympian very rewarding.

"Lauren is wonderful. She sits so beautifully on the horse people don't know she is paralyzed. She is very talented," Bongers-Steinebach said.

One challenge was training Barwick's horse, Onyx, to perform without getting cues from her legs.

"The horse had to learn these tests without the aid of the legs. It was a challenge because he is 13," Bongers-Steinebach said. "But as a classic German dressage rider, I believe you don't need your legs so much. To me, it makes you a better rider. It's a much nicer picture when you see a rider that's not really working on a horse."

Barwick said Bongers-Steinebach's training has helped her riding.

"As a coach and mentor, she's really great because she has no ego in her training. She's willing to work with me. She doing it for the best of the horse and the rider," Barwick said.

Bongers-Steinebach will travel with Barwick and serve as groom as well as personal coach. The rest of the team includes Robyn Andrews, Ashley Gowanlock and Roberta Sheffield.

About 40 miles to the southeast, Team USA was also in serious preparation for their Rio adventure.

The team was invited to hold their pre-Rio camp at The Grand Oaks Resort in Weirsdale.

The US team is made up of Sydney Collier, Rebecca Hart, Margaret McIntosh, Angela Peavy and Roxanne Trunnell.

Team coach, Kai Handt hopes the practice session will help bring cohesion to the team.

"We have a very young team. We have two 18-years-olds this time. It's one of the youngest teams we have ever had. We are fourth in the rankings so we'll see how it goes in Rio. They are doing a great job here at Grand Oaks getting our team together," Handt said.

Much like the Canadians, Team USA is also staying together during the training camp.

"We're living in one big house," Handt said. "The entire team, the grooms, the trainers are all staying on the grounds."

The team held a demonstration Thursday that was open to the public.

"The riders (did) their Olympic tests with judges scoring," Handt said.

Handt also is a native of Germany and operates the North Texas Equestrian Center near Dallas. It is his first Paralympics as the head coach, but he was part of the 2012 London Paralympics as well.

"It a very good location," Handt said of the Ocala, Marion County area.

"It's conveniently located and the climate conditions are similar to what we will experience in Rio," he said.

The Rio Paralympic equestrian competitions will be held from Sept. 11-16. To learn more about the equestrian components, visit http://tinyurl.com/znq3gto

Groom Lauren Massey carries rider Lauren Barwick of the Canadian Paralympic dressage team from Onyx after her practice at Hope Hall Farm in Reddick, Florida on Tuesday, August 30. The Candian team will gather at Hope Hill then travel to Rio.
ALAN YOUNGBLOOD / STAR-BANNER

Tina Wentz, left, volunteer and staff member and personal assistant to the five members of the US Paralympic equestrian team, give Charlotte Merle-Smith of Ocala, a hug as the team performed a mock demonstration for the public Thursday morning, September 1, 2016, at The Grand Oaks Resort and Museum in Weirsdale, FL. DOUG ENGLE/OCALA STAR-BANNER

As Lauren of the Canadian Paralympic team practices at Hope Hall Farm in Reddick, Florida on Tuesday, August 30. The Candian team will gather at Hope Hill then travel to Rio.
ALAN YOUNGBLOOD / STAR-BANNER

CONQUERING COSMETICS, MORE

Beauty boss: Miami Beach's Loren Ridinger shares secrets of success

By Nancy Dahlberg,
Miami Herald (TNS)

MIAMI – Loren Ridinger has been changing the face of the beauty business as well as internet shopping for more than 20 years, and the entrepreneur and senior executive has no plans to slow down. "It's not in my blood," she says.

With humble beginnings working out of their rental home's garage at the time, she and her husband, JR, co-founded internet retailing giant Market America in 1992, in Greensboro, N.C., where the company is still headquartered. In August, the company held one of its twice yearly empowerment conferences there, hosting 25,000 people, and she gave the opening speech. Today, the Ridingers live in Miami Beach, and each February, the Market America World Conference takes over AmericanAirlines Arena in Miami, bringing about 25,000 people to town.

Market America has generated more than $5.5 billion in accumulated retail sales and individuals have earned more than $2.9 billion in commissions and retail profits, the company said. In addition to the U.S., the company operates in Canada, Mexico, Australia, Hong Kong, Taiwan, the United Kingdom, Singapore, Mexico and Spain.

Ridinger also founded the award-winning cosmetics line Motives, her first line. She also created the solution-oriented personal care line Fixx and the jewelry collection Loren Jewels. Her daughter Amber is also an entrepreneur, having created DNA Miracles, a line of body and wellness products designed for babies, children and expectant mothers. Loren speaks about entrepreneurship regularly and has mentored young entrepreneurs. Last year, she partnered with Miami Beach startup Flat Out of Heels to create a line of shoes for the young fashion company.

Active on social media, Ridinger blogs regularly on www.LorensWorld.com, named one of Forbes' Top 100 websites for women, and her fashion blog, www.MyFashionCents.com

Ridinger, senior executive vice president of Market America, serial entrepreneur, fashionista, mentor, mom and grandmother with a third grandchild on the way, surrounds herself with successful people and those who want to be. She calls Jennifer Lopez and Eva Longoria good friends. Still, Ridinger is a self-described private person, who puts socializing at the bottom of her priority list as she manages her many ventures and adventures.

She recently took time out to share her views about Market America, entrepreneurship, what's next and the importance of knowing your "why." Here are excerpts of that conversation.

Q: Regarding your Market America journey, when did you and JR know this was going to be really big? Was that the vision from the beginning or did it evolve?

A: JR has always had that vision, to be honest with you. He's always been a great leader. Even prior to 1992 when the idea was forming, he was a strong believer that the world was fast changing, that technology was fast changing, and people would want to shop at home.

Q: Market America was ahead of its time and has stayed ahead, but that can't be easy when e-commerce trends change so fast. How do you stay relevant in this changing world while at the same time continuing to innovate?

A: That's the key, being relevant all the time with technology changing so fast. ... It's about staying ahead of the curve. JR has always been very connected and taught us to be very connected as a team to who our customers are. We know who she is, we know what she likes, we know what she likes to buy, we know how many children she has and what kind of pets she has. ... Being connected in that fashion to your customers – even for 6 million of them and we have been constantly collecting data about them – we have been able to gear who we are toward her. It's him too, of course, but generally, the shopper in the house is the woman.

We've always been so connected to our customers, we can't fail. By knowing what people want, we are always creating technologies that can work alongside. If people want to find better deals or want to know when the price drops, we have technology to do those things. You really have to be moving at the speed of sound, and that's what we do, what we have done for 26 years. It's been an incredible journey.

Q: Over the years, what are one or two of the most important lessons you have learned – maybe the hard way – about entrepreneurship?

A: To manage my time wisely, that's been a lesson for both of us. It's hard to run a company of this size and still have a life with your children and your grandchildren and juggle everything. I've learned what may not appear to be normal for other families is normal for us, it works for us. If we have to have dinner at 10:30 at night or 4:30 in the afternoon, and it works for us based on our schedules, we don't punish ourselves for it.

Neighborhood Meeting Minutes

Project:	Holiday Inn Alachua
Meeting Date & Time:	September 20, 2016 @ 6:00pm
Location:	Meeting Room A Alachua Branch Library 14913 NW 140 Street, Alachua, FL
Community Participants:	14
Attendees:	Residents listed on attached Sign-in-Sheet

Project Representatives:

Engineer:	Sergio Reyes, eda Stephanie Sutton, eda Rosa Trautz, eda
Owner:	Randy Gibbons, MPH Hotels Mike Holtz, MPH Hotels

Meeting Minutes:

Mr. Reyes introduced eda and the project/proposed hotel. The Holiday Inn Express will have 92 rooms and be 4 stories high. The building will be on north side of property. A retaining wall will be about 8 feet lower than the road in neighborhood. Stormwater system and parking will be to the south of building. There will be one connection/driveway to 167th. Reyes showed the meeting attendees a copy of the site plan for the project and the elevations of the proposed building, then opened the floor to questions from attendees.

Q: When will the project start?

A: This is first step; we will submit to the city next week, the process will take about 4 months, then construction can begin early next year.

Q: What is planned for the trees?

A: We are planning to keep them along the property line, and trees in the area of the building will be removed. A 50 foot buffer from the neighborhood will remain. With a 34 foot drop on site, grading will require the loss of some trees. Landscape will be provided as required by the city. The buffer on this site is 15 feet.

Q: Will there be fencing at the property line?

A: This has not been decided yet and is not required by code. It is not normally provided and there will be a natural buffer between hotel and houses. The pool at the rear will be fenced.

Q: Will there be other amenities, like a restaurant?

A: There will be a small sundries market, pool, gym, and meeting room.

Q: How often are hotels built this close to neighborhoods?

A: This depends on zoning. Hotels are allowed by right, which is fairly common because hotels are considered temporary residential and compatible with residential areas.

Q: Will the hotel face 441?

A: Yes, but it will be difficult to see from the road.

Q: Where will signage be?

A: On the property and on the building. No big interstate sign.

Q/C: There are concerns about security and the retaining wall only being 3 feet at its end. Residents would like to request fencing to protect the neighborhood to deter access from hotel to homes.

Q: Where is the dumpster located?

A: At the west side of the parking lot away from the neighborhood. There will be no vehicle traffic behind the hotel.

Q: What is the expected impact on traffic?

A: 92 rooms for a hotel is minimal compared to phase 2 of the neighborhood and the existing Publix.

Q: Will there be any lights at the rear of the building that would shine into the neighborhood?

A: No, lighting cannot spill into adjacent property by code, and lights have to be full cutoff. The City of Alachua has very restrictive lighting regulations.

Q: How long will it take to get the permits?

A: We are submitting to the city next week, then it will take about 4 months.

Q: Will the hotel have a business meeting rooms?

A: Yes, it will have one that will seat 35-40 people.

Q: Are they hiring?

A: They will be.

Q: How many other parcels are there left to develop?

A: Just one, the sale has not closed yet. There is an offer on the parcel.

Q: What was the motivation for locating the hotel north of 441 rather than south of 441?

A: The property was available and utilities are already available and it's proximate to existing development. Parcels south of 441 are also available.

Q: What are the expected prices of rooms?

A: They will be determined closer to opening.

Q: How long will construction take?

A: 10 months after site work begins, which can take 2 months. Overall, construction may take 12 months.

Holiday InAlachua @ Alachua Library
Neighborhood Meeting Sign-In Sheet

Tuesday, September 20, 2016 at 6:00pm

Name	Address	Phone	Email
Wm Wiersteel PhD	16643 NW 168th Alachua Fl	352 816-7553	billwiersteel@AOL.com
Barbara Kelso	16885 NW 167th PL Alachua	352 359-4580	bjkelso12@gmail.com
Charles Wallace	16621 NW 165th LN Alachua	~~352~~ 386-418 4609	c.wallace@hotmail.com
Jan Osejo	16681 NW 165th TERR	386-518-6048	janosejo@cox.net
Nicole Nieto	16603 NW 168th Terr		
Tom Miller	16642 NW 167th Ln		
Mike Jelenberg	16545 NW 165th Ter.		[illegible]@gmail.com
Kevin Stratton	16567 NW 165th Ln 32615	801 455 6093	
Israel Barreto	16787 NW 167 PL	407-701-4005	israelbarreto@gmail.com
Joel Maldonado	166 NW Road	787-383 4633	jomcastillo@hotmail.co
Virginia Johns	PO Box 1000 Alachua	386 462 2047	vjhipp@gmail.com
Brandi Nunn	16850 NW 166 Rd	352 219 9019	bnkraus@yahoo.com
Jay Patel	15960 ~~13946~~ NW US 441	386 462 2244	J.C.Patel@hotmail
Micah Barrett	15960 NW US 441	386 462 2244	mbarrett@alphahotelsmicanopy.com

03053-010-054
SCHULTZ, RICHARD B & CECILIA
1171 APPIAN WAY
SANTA ANA, CA 92705

03053-001-002
TALAL PROPERTIES LTD & TAREK
1326 E LUMSDEN RD
BRANDON, FL 33511

03053-001-005
A MASON GRACE RENTALS LLC
13929 NW 166TH TER
ALACHUA, FL 32615

03053-001-001
HIPP INVESTMENTS LLC
14610 NW 129TH TER
ALACHUA, FL 32615

03053-010-014
FORD NATHANIEL M III & TIROSHSA T
16515 NW 165TH TER
ALACHUA, FL 32615

03053-010-015
MITCHELL CHARLES E & NANCY E
16530 NW 165TH TER
ALACHUA, FL 32615

03053-010-013
JELMBERG MICHAEL & MARY
16545 NW 165TH TER
ALACHUA, FL 32615

03053-010-017
NYGAARD & STRATTAN
16567 NW 165TH LN
ALACHUA, FL 32615

03053-010-012
FROMHOLT DAVID B & SUSAN E
16575 NW 165TH TER
ALACHUA, FL 32615

03053-010-048
WESTBROOK BENTON C & DORA H
16602 NW 167TH DR
ALACHUA, FL 32615

03053-010-045
NOTO & NOTO
16603 NW 168TH TER
Alachua, FL 32615

03053-010-051
HARRIS AARON A
16609 NW 166TH DR
ALACHUA, FL 32615

03053-010-011
AXIAK LAURA ANNE
16611 NW 165TH TER
ALACHUA, FL 32615

03053-010-018
WALLACE CHARLES E & PATRICIA A
16621 NW 165TH LN
ALACHUA, FL 32615

03053-010-044
GEPHART RALPH G & DOROTHY J
16623 NW 168TH TER
ALACHUA, FL 32615

03053-010-053
DAVIS RICHARD E JR & MAUREEN
16624 NW 165TH TER
ALACHUA, FL 32615

03053-010-046
BOLANOS & MCKERCHER W/H
16642 NW 167TH DR
ALACHUA, FL 32615

03053-010-019
MANDARINO TERRANCE M & LISA CLARK
16651 NW 165TH LN
ALACHUA, FL 32615

03053-010-001
STEVENS JOHN J & JAMIE N
16775 NW 165TH LANE
ALACHUA, FL 32615

03053-010-002
DOLBEC RICHARD D II & LAUREN K
16813 NW 165TH LANE
Alachua, FL 32615

03053-010-003
GRIEVE THOMAS H & MELISA A
16843 NW 165TH LN
ALACHUA, FL 32615

03053-010-004
BROOKS TODD B
16873 NW 165TH LN
ALACHUA, FL 32615

03053-010-047
ROGERS, MICHAEL C & FELICIA GA
24644 49TH RD
O'BRIEN, FL 32071

03049-000-000
MEGAHEE ENTERPRISES LTD.,LLLP
2632 NW 43RD ST # 2138
GAINESVILLE, FL 32606

03049-003-000
MURPHY'S LOT LLC
2632 NW 43RD ST STE 2138
GAINESVILLE, FL 32606-7545

03053-001-004
ALACHUA-WINDCREST LLC
605 EAST ROBINSON ST STE 340
ORLANDO, FL 32801

03053-010-016
CARTER DIANE S
8502 NW 35TH RD
GAINESVILLE, FL 32606

03053-002-000
PATEL, INDIRA K
8706 SADDLEHORN DR
IRVING, TX 75063

03053-000-000
CAVACEPPI, SHARLEEN O TRUSTEE
PO BOX 1325
ALACHUA, FL 32616-1325

03053-001-003
RACETRAC PETROLEUM INC
PO BOX 56607
ATLANTA, GA 30343

03061-004-001
CIRCLE K STORES INC
PO BOX 8019
GARY, NC 27512-9998

03053-010-000
HERITAGE OAKS PROPERTY, OWNERS
PO BOX 969
Alachua, FL 32516

Antoinette Endelicato
5562 NW 93rd Avenue
Gainesville, FL 32653

Dan Rhine
288 Turkey Creek
Alachua, FL 32615

Tom Gorman
9210 NW 59th Street
Alachua, FL 32653

Richard Gorman
5716 NW 93rd Avenue
Alachua, FL 32653

Peggy Arnold
410 Turkey Creek
Alachua, FL 32615

David Forest
23 Turkey Creek
Alachua, FL 32615

John Tingue
333 Turkey Creek
Alachua, FL 32615

President of TCMOA
1000 Turkey Creek
Alachua, FL 32615

Linda Dixon, AICP
Assistant Director Planning
PO Box 115050
Gainesville, FL 32611

Craig Parenteau
FL Deptarment of Environmental Protection
4801 Camp Ranch Road
Gainesville, FL 32641

Jeannette Hinsdale
P.O. Box 1156
Alachua, FL 32616

Lynn Coullias
7406 NW 126th Ave
Alachua, FL 32615

Lynda Coon
7216 NW 126 Avenue
Alachua, FL 32615

Tamara Robbins
PO Box 2317
Alachua, FL 32616

Dr. Lee A. Niblock
Alachua County Manager
12 SE 1st Street
Gainesville, FL 32601

John Amerson
All County Marion Property Management
2916 NE Jacksonville Rd
Ocala, FL 34479

03053-010-054
SCHULTZ, RICHARD B & CECILIA
1171 APPIAN WAY
SANTA ANA, CA 92705

03053-001-002
TALAL PROPERTIES LTD & TAREK
1326 E LUMSDEN RD
BRANDON, FL 33511

03053-001-005
A MASON GRACE RENTALS LLC
13929 NW 166TH TER
ALACHUA, FL 32615

03053-001-001
HIPP INVESTMENTS LLC
14610 NW 129TH TER
ALACHUA, FL 32615

03053-010-014
FORD NATHANIEL M III & TIROSHSA T
16515 NW 165TH TER
ALACHUA, FL 32615

03053-010-015
MITCHELL CHARLES E & NANCY E
16530 NW 165TH TER
ALACHUA, FL 32615

03053-010-013
JELMBERG MICHAEL & MARY
16545 NW 165TH TER
ALACHUA, FL 32615

03053-010-017
NYGAARD & STRATTAN
16567 NW 165TH LN
ALACHUA, FL 32615

03053-010-012
FROMHOLT DAVID B & SUSAN E
16575 NW 165TH TER
ALACHUA, FL 32615

03053-010-048
WESTBROOK BENTON C & DORA H
16602 NW 167TH DR
ALACHUA, FL 32615

03053-010-045
NOTO & NOTO
16603 NW 168TH TER
Alachua, FL 32615

03053-010-051
HARRIS AARON A
16609 NW 166TH DR
ALACHUA, FL 32615

03053-010-011
AXIAK LAURA ANNE
16611 NW 165TH TER
ALACHUA, FL 32615

03053-010-018
WALLACE CHARLES E & PATRICIA A
16621 NW 165TH LN
ALACHUA, FL 32615

03053-010-044
GEPHART RALPH G & DOROTHY J
16623 NW 168TH TER
ALACHUA, FL 32615

03053-010-053
DAVIS RICHARD E JR & MAUREEN
16624 NW 165TH TER
ALACHUA, FL 32615

03053-010-046
BOLANOS & MCKERCHER W/H
16642 NW 167TH DR
ALACHUA, FL 32615

03053-010-019
MANDARINO TERRANCE M & LISA CLARK
16651 NW 165TH LN
ALACHUA, FL 32615

03053-010-001
STEVENS JOHN J & JAMIE N
16775 NW 165TH LANE
ALACHUA, FL 32615

03053-010-002
DOLBEC RICHARD D II & LAUREN K
16813 NW 165TH LANE
Alachua, FL 32615

03053-010-003
GRIEVE THOMAS H & MELISA A
16843 NW 165TH LN
ALACHUA, FL 32615

03053-010-004
BROOKS TODD B
16873 NW 165TH LN
ALACHUA, FL 32615

03053-010-047
ROGERS, MICHAEL C & FELICIA GA
24644 49TH RD
O'BRIEN, FL 32071

03049-000-000
MEGAHEE ENTERPRISES LTD.,LLLP
2632 NW 43RD ST # 2138
GAINESVILLE, FL 32606

03049-003-000
MURPHY'S LOT LLC
2632 NW 43RD ST STE 2138
GAINESVILLE, FL 32606-7545

03053-001-004
ALACHUA-WINDCREST LLC
605 EAST ROBINSON ST STE 340
ORLANDO, FL 32801

03053-010-016
CARTER DIANE S
8502 NW 35TH RD
GAINESVILLE, FL 32606

03053-002-000
PATEL, INDIRA K
8706 SADDLEHORN DR
IRVING, TX 75063

03053-000-000
CAVACEPPI, SHARLEEN O TRUSTEE
PO BOX 1325
ALACHUA, FL 32616-1325

03053-001-003
RACETRAC PETROLEUM INC
PO BOX 56607
ATLANTA, GA 30343

03061-004-001
CIRCLE K STORES INC
PO BOX 8019
GARY, NC 27512-9998

03053-010-000
HERITAGE OAKS PROPERTY,
OWNERS
PO BOX 969
Alachua, FL 32516

Legal Description

Tax Parcel Number 03053-001-001

September 26,2016

For: Hipp Investments, LLC
Overall

A PORTION OF FRACTIONAL SECTION 9, TOWNSHIP 8 SOUTH, RANGE 18 EAST, ALACHUA COUNTY, FLORIDA;

BEING MORE PARTICULARLY DESCRIBED AS FOLLOWS:

COMMENCE AT THE NORTHWEST CORNER OF FRACTIONAL SECTION 9, TOWNSHIP 8 SOUTH, RANGE 18 EAST, ALACHUA COUNTY, FLORIDA AND RUN THENCE SOUTH 01°49'00" EAST ALONG THE WEST BOUNDARY OF SAID SECTION 1576.08 FEET; THENCE NORTH 88°33'13" EAST, 1300.20 FEET TO THE NORTHWEST CORNER OF THAT CERTAIN TRACT OF LAND AS DESCRIBED IN OFFICIAL RECORDS BOOK 503, PAGE 107 OF THE PUBLIC RECORDS OF ALACHUA COUNTY, FLORIDA; THENCE SOUTH 01°49'00" EAST ALONG THE WEST LINE OF SAID CERTAIN TRACT OF LAND, 2347.44 FEET TO A POINT ON THE NORTHERLY RIGHT-OF-WAY LINE OF U.S. HIGHWAY NO. 441 (STATE ROAD NO.'S 20 AND 25 - 200' R/W); THENCE CONTINUE SOUTH 79°06'59" EAST, ALONG SAID RIGHT- OF-WAY LINE, 717.08 FEET TO THE POINT OF BEGINNING; THENCE CONTINUE SOUTH 79°06'59" EAST, ALONG SAID RIGHT-OF-WAY LINE, 305.12 FEET TO THE SOUTHWEST CORNER OF THAT CERTAIN PARCEL OF LAND AS DESCRIBED IN OFFICIAL RECORDS BOOK 2392, PAGE 782 OF SAID PUBLIC RECORDS; THENCE NORTH 03°06'22" WEST, 286.30 FEET TO THE NORTHWEST CORNER OF SAID CERTAIN PARCEL OF LAND; THENCE SOUTH 73°45'46" EAST, 264.96 FEET TO THE NORTHEAST CORNER OF SAID CERTAIN PARCEL OF LAND AND TO A POINT ON THE EAST LINE OF THAT CERTAIN TRACT OF LAND AS DESCRIBED IN OFFICIAL RECORDS BOOK 27, PAGE 296 OF SAID PUBLIC RECORDS; THENCE NORTH 03°06'22" WEST, ALONG SAID EAST LINE, (OFFICIAL RECORDS BOOK 27, PAGE 296) A DISTANCE OF 738.62 FEET; THENCE NORTH 78°52'28" WEST, 324.76 FEET; THENCE SOUTH 03°06'22" EAST, 205.27 FEET; THENCE SOUTH 60°21'17" WEST, 193.23 FEET TO A POINT LYING ON THE ARC OF A CURVE, CONCAVE SOUTHWESTERLY, HAVING A RADIUS OF 201.00 FEET; THENCE NORTHWESTERLY, ALONG THE ARC OF SAID CURVE, THROUGH A CENTRAL ANGLE OF 01°18'03", AN ARC DISTANCE OF 4.56 FEET TO THE END OF SAID CURVE, SAID ARC BEING SUBTENDED BY A CHORD , HAVING A BEARING AND DISTANCE OF NORTH 49°35'13" WEST, 4.56 FEET; THENCE NORTH

50°14'15" WEST, 204.90 FEET TO THE BEGINNING OF A CURVE, CONCAVE NORTHEASTERLY, HAVING A RADIUS OF 259.00 FEET; THENCE NORTHWESTERLY, ALONG THE ARC OF SAID CURVE, THROUGH A CENTRAL ANGLE OF 49°25'53", AN ARC DISTANCE OF 223.45 FEET TO THE END OF SAID CURVE, SAID ARC BEING SUBTENDED BY A CHORD, HAVING A BEARING AND DISTANCE OF NORTH 25°31'18" WEST, 216.58 FEET; THENCE NORTH 00°48'21" WEST, 52.08 FEET; THENCE NORTH 78°52'28" WEST, 61.33 FEET; THENCE SOUTH 00°48'21" EAST, 65.62 FEET TO THE BEGINNING OF A CURVE, CONCAVE NORTHEASTERLY, HAVING A RADIUS OF 320.00 FEET; THENCE SOUTHEASTERLY, ALONG THE ARC OF SAID CURVE, THROUGH A CENTRAL ANGLE OF 49°25'53", AN ARC DISTANCE OF 276.08 FEET TO THE END OF SAID CURVE, SAID ARC BEING SUBTENDED BY A CHORD, HAVING A BEARING AND DISTANCE OF SOUTH 25°31'18" EAST, 267.59 FEET; THENCE SOUTH 50°14'15" EAST, 203.09 FEET TO THE BEGINNING OF A CURVE, CONCAVE SOUTHWESTERLY, HAVING A RADIUS OF 200.00 FEET; THENCE SOUTHEASTERLY, ALONG THE ARC OF SAID CURVE, THROUGH A CENTRAL ANGLE OF 27°09'40", AN ARC DISTANCE OF 94.81 FEET TO THE END OF SAID CURVE, SAID ARC BEING SUBTENDED BY A CHORD, HAVING A BEARING AND DISTANCE OF SOUTH 36°39'24" EAST, 93.93 FEET; THENCE SOUTH 23°04'34" EAST, 49.38 FEET TO THE BEGINNING OF A CURVE, CONCAVE WESTERLY, HAVING A RADIUS OF 150.00 FEET; THENCE SOUTHERLY, ALONG THE ARC OF SAID CURVE, THROUGH A CENTRAL ANGLE OF 48°30'51", AN ARC DISTANCE OF 127.01 FEET TO THE END OF SAID CURVE, SAID ARC BEING SUBTENDED BY A CHORD, HAVING A BEARING AND DISTANCE OF SOUTH 01°10'51" WEST, 123.25 FEET, THE END OF SAID CURVE BEING THE BEGINNING OF A CURVE, CONCAVE SOUTHEASTERLY, HAVING A RADIUS OF 500.00 FEET; THENCE SOUTHWESTERLY, ALONG THE ARC OF SAID CURVE, THROUGH A CENTRAL ANGLE OF 26°35'29", AN ARC DISTANCE OF 232.05 FEET TO THE END OF SAID CURVE, SAID ARC BEING SUBTENDED BY A CHORD HAVING A BEARING AND DISTANCE OF SOUTH 12°08'33" WEST, 229.98 FEET; THENCE SOUTH 01°09'12" EAST, 74.59 FEET TO THE BEGINNING OF A CURVE, CONCAVE WESTERLY, HAVING A RADIUS OF 300.00 FEET; THENCE SOUTHERLY, ALONG THE ARC OF SAID CURVE, THROUGH A CENTRAL ANGLE OF 12°50'20", AN ARC DISTANCE OF 67.22 FEET TO THE POINT OF BEGINNING, SAID ARC BEING SUBTENDED BY A CHORD, HAVING A BEARING AND DISTANCE OF SOUTH 05°15'59" WEST, 67.08 FEET.

CONTAINING 9.53 ACRES (414,954 SQUARE FEET), MORE OR LESS.

Legal Description

Portion of Tax Parcel Number 03053-001-001

September 29,2016

For: Hipp Investments, LLC
Lot 3A
Hotel Site at Alachua Gateway

A portion of Fractional Section 9, Township 8 South, Range 18 East, Alachua County, Florida; being more particularly described as follows:

Commence at the northwest corner of Fractional Section 9, Township 8 South, Range 18 East, Alachua County, Florida and run thence South 01°49'00" East, along the west boundary of said Section, 1576.08 feet; thence North 88°33'13" East, 1300.20 feet to the northwest corner of that certain tract of land as described in Official Records Book 503, page 107 of the Public Records of Alachua County, Florida; thence South 01°49'00" East, along the west line of said certain tract of land, 1347.88 feet to a 4" X 4" concrete monument (stamped "LB 5091 BARRINEAU") as depicted on 'Heritage Oaks Phase I', a subdivision as per plat thereof, recorded in Plat Book 24, page 79 of said Public Records; thence South 78°52'28" East, along the south boundary of said Heritage Oaks Phase I, a distance of 933.22 feet to the Point of Beginning; thence continue South 78°52'28" East, along said south boundary, 324.76 feet to the southeast corner of said Heritage Oaks Phase I and to a point on the east line of that certain tract of land as described in Official Records Book 27, page 296 of said Public Records; thence South 03°06'22" East, along said east line, 514.31 feet; thence North 73°46'22" West, 416.85 feet to a point on the east line of an Ingress and Egress, Road Improvements, and Public Utilities Easement Agreement recorded in Official Records Book 4400, page 2104 of said Public Records, said point lying on the arc of a curve, concave southwesterly, having a radius of 301.00 feet; thence northwesterly, along the east line of said Ingress and Egress, Road Improvements and Public Utilities Easement Agreement, through the following three (3) courses: (1) run thence northwesterly along the arc of said curve through a central angle of 19°31'14", an arc distance of 102.55 feet to the end of said curve, said arc being subtended by a chord having a bearing and distance of North 27°02'33" West, 102.06 feet, (2) North 36°48'10" West, 46.40 feet to the beginning of a curve, concave southwesterly, having a radius of 201.00 feet, (3) thence northwesterly, along the arc of said curve, through a central angle of 12°08'02", an arc distance of 42.57 feet, said arc being subtended by a chord having a bearing and distance of North 42°52'11" West, 42.49 feet; thence North 60°21'17" East, 193.23 feet; thence North 03°06'22" West, 205.27 feet to the Point of Beginning.

2404 NW 43rd Street
Gainesville, FL 32606
www.edafl.com
Phone (352) 373-3541
Fax (352) 373-7249

Legal Description

Portion of Tax Parcel Number 03053-001-001

September 26,2016

For: Hipp Investments, LLC
Lot 3B

A PORTION OF FRACTIONAL SECTION 9, TOWNSHIP 8 SOUTH, RANGE 18 EAST, ALACHUA COUNTY, FLORIDA;

BEING MORE PARTICULARLY DESCRIBED AS FOLLOWS:

COMMENCE AT THE NORTHWEST CORNER OF FRACTIONAL SECTION 9, TOWNSHIP 8 SOUTH, RANGE 18 EAST, ALACHUA COUNTY, FLORIDA AND RUN THENCE SOUTH 01°49'00" EAST ALONG THE WEST BOUNDARY OF SAID SECTION 1576.08 FEET; THENCE NORTH 88°33'13" EAST, 1300.20 FEET TO THE NORTHWEST CORNER OF THAT CERTAIN TRACT OF LAND AS DESCRIBED IN OFFICIAL RECORDS BOOK 503, PAGE 107 OF THE PUBLIC RECORDS OF ALACHUA COUNTY, FLORIDA; THENCE SOUTH 01°49'00" EAST ALONG THE WEST LINE OF SAID CERTAIN TRACT OF LAND, 2347.44 FEET TO A POINT ON THE NORTHERLY RIGHT-OF-WAY LINE OF U.S. HIGHWAY NO. 441 (STATE ROAD NO.'S 20 AND 25 - 200' R/W); THENCE SOUTH 79°06'59" EAST, ALONG SAID RIGHT- OF-WAY LINE, 717.08 FEET TO THE POINT OF BEGINNING; THENCE CONTINUE SOUTH 79°06'59" EAST, ALONG SAID RIGHT-OF-WAY LINE, 305.12 FEET TO THE SOUTHWEST CORNER OF THAT CERTAIN PARCEL OF LAND AS DESCRIBED IN OFFICIAL RECORDS BOOK 2392, PAGE 782 OF SAID PUBLIC RECORDS; THENCE NORTH 03°06'22" WEST, 286.30 FEET TO THE NORTHWEST CORNER OF SAID CERTAIN PARCEL OF LAND; THENCE SOUTH 73°45'46" EAST, 264.96 FEET TO THE NORTHEAST CORNER OF SAID CERTAIN PARCEL OF LAND AND TO A POINT ON THE EAST LINE OF THAT CERTAIN TRACT OF LAND AS DESCRIBED IN OFFICIAL RECORDS BOOK 27, PAGE 296 OF SAID PUBLIC RECORDS; THENCE NORTH 03°06'22" WEST, ALONG SAID EAST LINE, (OFFICIAL RECORDS BOOK 27, PAGE 296) A DISTANCE OF 224.31 FEET; THENCE NORTH 73°46'22" WEST, 416.85 FEET TO A POINT ON THE EAST LINE OF AN INGRESS AND EGRESS, ROAD IMPROVEMENTS, AND PUBLIC UTILITIES EASEMENT AGREEMENT RECORDED IN OFFICIAL RECORDS BOOK 4400, PAGE 2104 OF SAID PUBLIC RECORDS, SAID POINT LYING ON THE ARC OF A CURVE CONCAVE SOUTHWESTERLY, HAVING A RADIUS OF 301.00 FEET; THENCE NORTHWESTERLY, ALONG THE EAST LINE OF SAID INGRESS AND EGRESS,

ROAD IMPROVEMENTS AND PUBLIC UTILITIES EASEMENT AGREEMENT, THROUGH THE FOLLOWING (6) COURSES: (1) RUN THENCE NORTHWESTERLY ALONG THE ARC OF SAID CURVE THROUGH A CENTRAL ANGLE OF 19°31'14", AN ARC DISTANCE OF 102.55 FEET TO THE END OF SAID CURVE, SAID ARC BEING SUBTENDED BY A CHORD HAVING A BEARING AND DISTANCE OF NORTH 27°02'33" WEST, 102.06 FEET, (2) NORTH 36°48'10" WEST, 46.40 FEET TO THE BEGINNING OF A CURVE, CONCAVE SOUTHWESTERLY, HAVING A RADIUS OF 201.00 FEET, (3) THENCE NORTHWESTERLY, ALONG THE ARC OF SAID CURVE, THROUGH A CENTRAL ANGLE OF 13°26'05", AN ARC DISTANCE OF 47.13 FEET TO THE END OF SAID CURVE, SAID ARC BEING SUBTENDED BY A CHORD , HAVING A BEARING AND DISTANCE OF NORTH 43°31'12" WEST, 47.02 FEET, (4) THENCE NORTH 50°14'15" WEST, 204.90 FEET TO THE BEGINNING OF A CURVE, CONCAVE NORTHEASTERLY, HAVING A RADIUS OF 259.00 FEET, (5) THENCE NORTHWESTERLY, ALONG THE ARC OF SAID CURVE, THROUGH A CENTRAL ANGLE OF 49°25'53", AN ARC DISTANCE OF 223.45 FEET TO THE END OF SAID CURVE, SAID ARC BEING SUBTENDED BY A CHORD, HAVING A BEARING AND DISTANCE OF NORTH 25°31'18" WEST, 216.58 FEET, (6) THENCE NORTH 00°48'21" WEST, 52.08 FEET TO A POINT ON THE SOUTH BOUNDARY OF 'HERITAGE OAKS PHASE I', A SUBDIVISION AS PER PLAT THEREOF, RECORDED IN PLAT BOOK 24, PAGE 79 OF SAID PUBLIC RECORDS; THENCE NORTH 78°52'28" WEST, ALONG SAID SOUTH BOUNDARY, A DISTANCE OF 61.33 FEET TO A POINT ON THE WEST LINE OF SAID INGRESS AND EGRESS, ROAD IMPROVEMENTS AND PUBLIC UTILITIES EASEMENT AGREEMENT; THENCE SOUTHERLY ALONG SAID WEST LINE THROUGH THE FOLLOWING (9) COURSES: (1) SOUTH 00°48'21" EAST, 65.62 FEET TO THE BEGINNING OF A CURVE, CONCAVE NORTHEASTERLY, HAVING A RADIUS OF 320.00 FEET, (2) THENCE SOUTHEASTERLY, ALONG THE ARC OF SAID CURVE, THROUGH A CENTRAL ANGLE OF 49°25'53", AN ARC DISTANCE OF 276.08 FEET TO THE END OF SAID CURVE, SAID ARC BEING SUBTENDED BY A CHORD, HAVING A BEARING AND DISTANCE OF SOUTH 25°31'18" EAST, 267.59 FEET, (3) THENCE SOUTH 50°14'15" EAST, 203.09 FEET TO THE BEGINNING OF A CURVE, CONCAVE SOUTHWESTERLY, HAVING A RADIUS OF 200.00 FEET, (4) THENCE SOUTHEASTERLY, ALONG THE ARC OF SAID CURVE, THROUGH A CENTRAL ANGLE OF 27°09'40", AN ARC DISTANCE OF 94.81 FEET TO THE END OF SAID CURVE, SAID ARC BEING SUBTENDED BY A CHORD, HAVING A BEARING AND DISTANCE OF SOUTH 36°39'24" EAST, 93.93 FEET, (5) THENCE SOUTH 23°04'34" EAST, 49.38 FEET TO THE BEGINNING OF A CURVE, CONCAVE WESTERLY, HAVING A RADIUS OF 150.00 FEET, (6) THENCE SOUTHERLY, ALONG THE ARC OF SAID CURVE, THROUGH A CENTRAL ANGLE OF 48°30'51", AN ARC DISTANCE OF 127.01 FEET TO THE END OF SAID CURVE, SAID ARC BEING SUBTENDED BY A CHORD, HAVING A BEARING AND DISTANCE OF SOUTH 01°10'51" WEST, 123.25 FEET, THE END OF SAID CURVE BEING THE BEGINNING OF A CURVE, CONCAVE SOUTHEASTERLY, HAVING A RADIUS OF 500.00 FEET, (7) THENCE SOUTHWESTERLY, ALONG THE ARC OF SAID CURVE, THROUGH A CENTRAL ANGLE OF 26°35'29", AN ARC DISTANCE OF 232.05 FEET TO THE END OF SAID CURVE, SAID ARC BEING SUBTENDED BY A CHORD HAVING A BEARING AND

DISTANCE OF SOUTH 12°08'33" WEST, 229.98 FEET; (8) THENCE SOUTH 01°09'12" EAST, 74.59 FEET TO THE BEGINNING OF A CURVE, CONCAVE WESTERLY, HAVING A RADIUS OF 300.00 FEET, (9) THENCE SOUTHERLY, ALONG THE ARC OF SAID CURVE, THROUGH A CENTRAL ANGLE OF 12°50'20", AN ARC DISTANCE OF 67.22 FEET TO THE POINT OF BEGINNING, SAID ARC BEING SUBTENDED BY A CHORD, HAVING A BEARING AND DISTANCE OF SOUTH 05°15'59" WEST, 67.08 FEET.

CONTAINING 5.28 ACRES (230,064 SQUARE FEET), MORE OR LESS.

December 19, 2016

Adam Hall, AICP
City Planner
City of Alachua
15100 NW 142nd Terrace
Alachua, FL 32616

Re: Completeness Review Response – Holiday Inn Alachua Site Plan and Lot Split

Dear Mr. Hall:

The applicant's responses to the completeness review comments issued on December 13, 2016 are below. Included in this package are the following items:

- 4 Sets of Revised Plans
- 4 Copies of Revised Application Package Materials

DEFICIENCIES TO BE ADDRESSED
Unless otherwise noted, references to code Sections refer to City of Alachua Land Development Regulations.

Comments by: Adam Hall, Planner - Office of Planning and Community Development
Per my review so far, the following DRT comments have not been addressed:

1. FLUM Policy 1.3.d.9 has not been addressed in the Comp Plan consistency analysis portion of the application. DRT Comment A.2.
   Future Land Use Element Policy 1.3.d creates design and performance standards for commercial development proposals. Policy 1.3.d.9 has not been adequately addressed. Site appears to be potentially constrained by the presence of unsuitable soils (Bivans Sand, 5% to 8% slopes). Please address.

   <u>Response</u>: Comprehensive Plan Consistency Analysis has been updated to reflect this policy.

2. The Concurrency Impact Analysis has not been updated. DRT Comment B.1.
   The Concurrency Impact Analysis Report references "Table 1" as a data source for available capacities for potable water, wastewater, and solid waste. Table 1 (and Table 2) not provided in Concurrency Impact Analysis Report.

   <u>Response</u>: Tables are attached to concurrency analysis.

3. The demarcated pedestrian connection between the parking areas and entrance to the building should connect with pedestrian facilities proposed (sidewalk that runs through parking lot). DRT Comment C.2.b.

In parking lots with 100 parking spaces or more, a pedestrian crosswalk is required between the primary entrance of the structure and the parking area. Crosswalk should be at least 10' feet wide and raised, striped, or otherwise designated with alternative materials.

<u>Response</u>: See sheet C1.00 of the revised plan set for revised crosswalk.

4. Pool equipment has been added to landscape plan, but no screening is shown. Must be screened with wood, masonry, stone, or finished metal or screened with landscaping. DRT comment C.3.j.

   Pool equipment or structure not shown on landscaping plans (shown on architectural plans, however); per Section 6.2.3 (D), equipment must be screened with solid wood, masonry, stone, or finished metal.

   <u>Response</u>: See revised sheet A-001

5. General landscape comment: the proposed tree counts appear to be slightly off, please verify. Counted trees on site plan meet all landscape requirements, other than those addressed in this email.

   <u>Response</u>: See revised landscape plans.

6. Retaining wall details/ specs not found in resubmittal. DRT comment C.4.

   <u>Response</u>: See sheet C701.1.

7. No additional row of understory trees along rear property line show in plans as discussed at DRT and as noted in DRT comment C.6.a.i.

   <u>Response</u>: See revised landscape plans.

8. Color architectural plans not submitted (will be required at final submittal).

   <u>Response</u>: See sheets A200 and A201.

9. Calculation of floor to area ratio does not appear to match proposed square footage and lot size. Please verify and/or show calculation of floor to area ratio.

   <u>Response</u>: See revised sheet C0.00.

Comments by: Rodolfo Valladeres, PE, Public Services Director, 12/13/16

1. Manhole; Sheet C4.00 - Referenced sanitary manhole does not 'exist.' Provide sanitary manhole 6 inches above grade and a 10:1 slope to grade.

   <u>Response</u>: See revised sheet C4.00 for corrected leader and C4.10 for additional construction detail.

Comments by: A. J. "Jay" Brown, Jr., PE - President, JBrown Professional Group Inc.

Sht. C2.00

1. The valley gutter along NW 167th Blvd. @ the driveway connection was eliminated but the curb transitions were not indicated. The curb upstream of the driveway has to be removed and transitioned from standard C & G to spillout C & G in order for the valley gutter to be eliminated and the drainage to work properly within the curb profile. This should be indicated / detailed on the plans.

   <u>Response</u>: See sheet C2.00 of the revised plan set. Curb and gutter transition detail is specified on sheet C2.00.

2. Provide better spot grading at the driveway intersection to make sure the ADA ramps are constructed properly and the crosswalk cross-slope is not steeper than 2.0%. (Previous comment)

   <u>Response</u>: See revised sheet C2.00 for additional spot elevations.

3. Provide better spot grading at the ADA parking spaces to assure they are constructed with max slope of 2.0% and the sidewalk transitions are constructed properly. (Previous Comment). A spot at each disabled parking space bay exceeds 2.0%.

   <u>Response</u>: See revised sheet C2.00 for additional spot elevations. Grades were checked and annotated on sheet C2.00.

4. Is there a design detail for the retaining wall? What material is the wall supposed to be? Is it masonry or poured-in-place concrete? A note states it is to be designed by others. It is very important this wall is designed properly by a Florida Registered Structural Engineer PE. I suggest the design details for this wall be added to this plan set. (Previous Comment) We were not provided with this design detail although it was mentioned that it was provided to the City. The main point is that a signed & sealed structural engineering design drawing of the retaining wall has been provided to the City.

   <u>Response</u>: Retaining wall design is included with this submittal.

5. Suggest showing the building roof storm drain discharge locations and their piping tie-ins to the storm sewer lines provided. (Previous Comment) Does any roof drain discharge to the ground in the NE quadrant of this building? Do not understand why this area, which contains a good bit of impervious area, is not directed to the stormwater retention basin.

   <u>Response</u>: There are no roof drains in the NE corner of the building. Sheet C2.00 of the revised plan set has been modified to show which downspouts discharge above ground. Downspouts that are tied into the stormwater system are indicated by the pipe connecting it to the header pipe around the building. The only impervious area not directed to the stormwater system is a small portion of the sidewalk on the NE side of the building.

6. Spot Elevations should be provided on the exterior of the building to identify drainage patterns away from the building. (Previous comment was not addressed)

   <u>Response</u>: See revised sheet C2.00 for additional spot elevations. Sht. C2.20

7. A note should be added in the basin plan view which identifies the location of the basin undercut limits per the GSE Geotechnical Report. These limits are to extend to the southeast of the basin to the elevation 98 contour and this is not depicted on the drawings. (Previous Comment)

   <u>Response</u>: See revised sheet C2.20.

8. Please clarify on the basin Section A-A if the undercut on the side slopes is 12" thick. (Previous Comment)

   <u>Response</u>: See revised sheet C2.20.

Sht. C4.00

1. Not sure what is meant by tapping saddle and box. Remove "box" as appropriate.

   <u>Response</u>: See detail on C4.10.

Statement of Proposed Uses

The proposed Holiday Inn will provide hospitality services to residents and visitors to the City of Alachua. The building will be 4 stories with 92 guest rooms.

Comprehensive Plan Consistency

Vision Element:

III. GOALS TO IMPLEMENT THE VISION

GOAL 1: Economic Development: The City of Alachua has a unique business climate. The City is home to corporations, technology incubators, local businesses, and start-up companies. The City will maintain its focus on a welcoming business environment and encourage business development in the downtown area and along the U.S. 441 corridor. Alachua desires to continue to be a home to innovative businesses and an employment center where jobs are provided at every level. The City will continue to encourage the growth and development of established industries, such as biotechnology, and encourage the diversification and expansion of commercial businesses which provide integral services to the City's residents.

Consistency: The proposed Holiday Inn will support and contribute to the type of commercial development that the City of Alachua encourages along the US 441 corporate corridor. The proposed facility will also increase the number of job opportunities in the City and promote the local tourist economy.

Future Land Use Element:

Objective 1.3: Commercial
The City of Alachua shall establish three commercial districts: Community Commercial, Commercial and Central Business District. These districts shall provide a broad range of retail sales and services, as well as office uses, in order to provide for the availability of goods and services, both to the citizens of Alachua and to the citizens of the North Central Florida region.

Consistency: The proposed Holiday Inn will serve the intent of the Commercial Future Land Use designation, as it will provide access to a hotel for guests and the citizens of Alachua in a commercialized, urban portion of the City located in close proximity to the population base and Interstate 75. In addition, the site is consistent

with the policies outlined in Future Land Use Policy 1.3.b and 1.3.d as indicated below:

Policy 1.3.b: Commercial: The Commercial land use category is established to provide for general commercial uses, as well as more intense commercial and highway commercial uses. This is the land use category in which large-scale, regional commercial uses may locate. The following uses are allowed within the Commercial land use category:
1. Retail sales and services;
2. Personal services;
3. Financial Institutions;
4. Outdoor recreation and entertainment;
5. Tourist-related uses;
6. Hotels, motels;
7. Commercial shopping centers;
8. Auto-oriented uses;
9. Traditional Mixed-use Neighborhood Planned Developments;
10. Employment Center Planned Developments;
11. Commercial recreation centers;
12. Office/business parks;
13. Limited industrial services;
14. Eating Establishments

<u>Consistency:</u> As indicated in Policy 1.3(b)(6) above, the proposed Holiday Inn hotel is consistent with and will serve the intent of the Commercial Future Land Use category. The site is a proposed hotel near commercial and residential development near the intersection of I-75 and US Hwy 441.

Policy 1.3.d: Design and performance standards: The following criteria shall apply when evaluating commercial development proposals:

1. *Integration of vehicular and non-vehicular access into the site and access management features of site in terms of driveway cuts and cross access between adjacent sites, including use of frontage roads and/or shared access;*

   <u>Consistency:</u> The site plan includes an appropriately designed vehicular connection to an adjacent street and provides a sidewalk for non-vehicular access to the site and driveway for vehicular access.

2. *Buffering from adjacent existing/potential uses;*

   <u>Consistency:</u> A 15 foot rear setback is shown between the site and adjacent residential properties. There is also a 50 foot landscape buffer on the south side of the Heritage Oaks development.

3. *Open space provisions and balance of proportion between gross floor area and site size;*

   <u>Consistency</u>: The proposed project site exceeds the 10% required open space and the proposed building is less than the maximum 0.50 floor area ratio, as demonstrated on the Site Plan.

4. *Adequacy of pervious surface area in terms of drainage requirements;*

   <u>Consistency:</u> The Site Plan includes a detailed stormwater and open space plan with design details for an on-site basin area, which demonstrate compliance with all applicable local and state regulations.

5. *Placement of signage;*

   <u>Consistency:</u> The permitting of signs will occur under a separate process and those permits shall be prepared in compliance with the applicable criteria.

6. *Adequacy of site lighting and potential impacts of lighting upon the surrounding area. Lighting should be designed to minimize impacts and preserve the ambiance and quality of the nighttime sky by reducing light trespass and light pollution on adjacent properties by utilizing lighting at an appropriate intensity, direction and times to ensure light is not overused or impacting areas where it is not intended;*

   <u>Consistency:</u> The Site Plan includes a photometric plan that complies with all elements of the Comprehensive Plan and Land Development Regulations.

7. *Safety of on-site circulation patterns (patron, employee and delivery vehicles), including parking layout and drive aisles, and points of conflict;*

   <u>Consistency:</u> The parking area includes sidewalks and crosswalks (with internal and external connectivity) to ensure safe on-site circulation for vehicular and non-vehicular traffic.

8. *Landscaping, as it relates to the requirements of the Comprehensive Plan and Land Development Regulations;*

   <u>Consistency</u>: The Site Plan includes a landscape plan prepared by a registered landscape architect that complies with all elements of the Comprehensive Plan and Land Development Regulations.

9. *Unique features and resources which may constrain site development, such as soils, existing vegetation and historic significance; and*

   <u>Consistency:</u> The geotechnical report (Attachment A of the Drainage Design Notes) for soil recommendations to allow development.

10. *Performance based zoning requirements, which may serve as a substitute for or accompany land development regulations in attaining acceptable site design.*

    <u>Consistency</u>: No specific performance based zoning requirements apply to this project, other than the standard requirements found in the Land Development Code.

11. *Commercial uses shall be limited to an intensity of less than or equal to .50 floor area ratio for parcels 10 acres or greater, .50 floor area ratio for parcels less than 10 acres but 5 acres or greater, a .75 floor area ratio for parcels less than 5 acres but greater than 1 acre, and 1.0 floor area ratio to parcels 1 acre or less.*

    <u>Consistency:</u> The proposed building to be located on site has less than a 0.50 floor area ratio, as demonstrated on the Site Plan.

Policy 1.3.e: The creation/promotion of strip pattern commercial development shall be discouraged. Infill within established commercial areas is preferred over extension of a strip commercial pattern. Extension of a commercial land use designation may be considered in circumstances where the proposed commercial parcel is located within a block in which at least fifty percent (50%) of the block face (in linear feet) is either currently developed with commercial land uses or is designated for commercial use. In either case, the proposed commercial land use extension shall not encroach into a residential area. Judging the suitability of a location for an extension of commercial land uses shall be based upon the following minimum criteria:

1. *Impacts upon traffic circulation should be anticipated and mitigated through the reservation of right-of-way for road widening and marginal access streets. Access points for commercial complexes shall seek to minimize points of conflict by utilizing frontage roads, providing cross access between parcels or installing shared use curb cuts for access driveways to the maximum extent feasible.*

    <u>Consistency</u>: The Site Plan includes an appropriately designed vehicular access point to the adjacent street and includes sidewalks for safe non-vehicular access to the site.

2. *Setbacks and landscaped or other appropriate buffers shall be established to mitigate the visual impacts of commercial development.*

    <u>Consistency</u>: The Site Plan includes a landscape plan that complies with all elements of the Comprehensive Plan and Land Development Regulations. A 15 foot rear setback is shown between the site and adjacent residential properties. As a point of information, there is also an existing 50 foot landscape buffer on the south side of the Heritage Oaks development.

3. *A sidewalk or bicycle path shall be required where appropriate, to provide convenient access to surrounding residents and to reduce traffic volumes on the roadways.*

    <u>Consistency</u>: The Site Plan includes sidewalks with internal and external interconnectivity to provide convenient access to surrounding residents and reduce traffic volumes on roadways.

Concurrency Impact Analysis
Holiday Inn

This proposed building is a 53,792 square foot (92 room) hotel with associated parking and stormwater infrastructure improvements.

Stormwater:

A detailed stormwater management plan is included with this submittal. The proposed stormwater system is designed in compliance with City of Alachua and Suwannee River Water Management District requirements.

Potable Water:

Goal 4: Provide an adequate supply of high quality potable water to customers throughout the service area.
Objective 4.1 Achieve and maintain acceptable levels of service for potable water quality and quality.

Project Impact: For the hotel development (which will have 92 rooms), it is estimated that approximately 9,200 G.P.D. will be used for the proposed hotel (Ch. 64E-6, F.A.C.). The proposed hotel will generate approximately 9,200 G.P.D., based on this calculation 92 rooms x 100 G.P.D./room = 9,200 G.P.D.) As shown in the following table, there is adequate capacity available to support this development.

Table 1. Potable Water Impacts

System Category	Gallons Per Day
Current Permitted Capacity[1]	2,300,000
Less Actual Potable Water Flows[1]	1,190,000
Reserved Capacity[1]	112,897
Holiday Inn	9,200
Residual Capacity	**987,903**
Percentage of Permitted Design Capacity Utilized	**57.05%**

Sources:
1. City of Alachua Development Monitoring Report, October 2016

2404 NW 43rd Street
Gainesville, FL 32606
www.edafl.com
Phone (352) 373-3541
Fax (352) 373-7249

Sanitary Sewer:

Goal 1: Plan for and provide adequate, high quality and economical wastewater service while protecting the environment, especially groundwater resources.

Objective 1.2 Wastewater service will be made available to new development in a manner to promote compact urban growth, promoting development where wastewater service is available, and discouraging urban sprawl.

Project Impact For the hotel development (which will have 92 rooms), it is estimated that approximately 9,200 G.P.D. will be used for the proposed hotel (Ch. 64E-6, F.A.C.). The proposed hotel will generate approximately 9,200 G.P.D., based on this calculation 92 rooms x 100 G.P.D./room = 9,200 G.P.D.) As shown in the following table, there is adequate capacity available to support this development.

Table 2. Sanitary Sewer Impacts

System Category	Gallons Per Day
Treatment Plant Current Permitted Capacity	1,500,000
Less Actual Treatment Plant Flows[1]	615,000
Reserved Capacity[1]	**73,307**
Holiday Inn (Hotel)	**9,200**
Residual Capacity	**802,493**
Percentage of Permitted Design Capacity Utilized	**46.50%**

Sources:
1. City of Alachua Development Monitoring Report, October 2016

Solid Waste:

Goal 2: The City of Alachua will provide for solid waste disposal service in a sanitary, economic, and environmentally safe manner.

Project Impact: Commercial uses generate approximately 12 pounds per day of solid waste per 1,000 square feet (Environmental Engineering: A Design Approach, Cincero and Cincero, 1996). The proposed facility will generate approximately 646 pounds of solid waste will be generated per day (53,792 SF / 1,000 SF x 12 = 646 pounds per day). As indicated in the following table, the proposed solid waste generated as part of this project will not reduce the level of service in the City of Alachua.

Table 3. Solid Waste Impacts

System Category	Lbs Per Day	Tons Per Year
Existing Demand[1]	39,152.00	7,145.24
Reserved Capacity[1]	**4,866.01**	**888.05**
New River Solid Waste Facility Capacity[2]	**50 years**	

1. Bureau of Economic & Business Research, University of Florida, Estimates of Population by County and City in Florida, April 1, 2015; Policy 2.1.a, CFNGAR Element

2. Darrell O'Neal, Executive Director, New River Solid Waste Association, March 2016

Traffic:

The proposed use of the project site for commercial (hotel) use will not create a traffic impact that will exceed the approved level of service standards for the impacted roadways.

Affected Comprehensive Plan Roadway Segments:

Segment Number	Segment Description	Lanes	Functional Classification	Area Type	LOS
5 (13, 14 & 15)	US 441 (from SR 235 to north city limits)	4/D	Principal Arterial	Urban Trans	E
1 Source: City of Alachua Comprehensive Plan, Transportation Element.					

Trip Generation:

Land Use	AADT (Enter/Exit)	Peak Hour (Enter/Exit)
Hotel (ITE Code 310)	752 (376/376)	56 (33/23)
1 Source: ITE Trip Generation, 9th Edition. *2 Formulas: ITE Code 310 – AADT –8.17 trips per room x 92 rooms (50% entering/50% exiting); PM Peak Hour –0.61 trips per room x 92 rooms (58% entering/42% exiting)*		

Projected Impact on Affected Comprehensive Plan Roadway Segments:

Traffic System Category	US 441 Segment 5, (13, 14, 15)[1]	
	ADT	Peak Hour
Maximum Service Volume[2]	35,500	3,200
Existing Traffic[3]	23,495	2,232
Reserved Trips[4]	3,769	362
Available Capacity[4]	8,236	606
Increase/Decrease in Daily Trips Generated by Development	-752	-56
Residual Capacity After Development's Impacts	7,484	550

1 FDOT roadway segment number shown in parenthesis (when applicable.) For the purposes of concurrency management, COA Comprehensive Plan segments that make up a portion of a larger FDOT roadway segment will be evaluated together when determining post development roadway capacity.
2 Source: FDOT 2013 Quality/Level of Service Handbook, Generalized Annual Average Daily Volumes and Generalized Peak Hour Two-Way Volumes for Areas Transitioning to Urbanized Areas or Areas of 5,000 Not in Urbanized Areas.
3 Florida State Highway System Level of Service Report 2013, Florida Department of Transportation, District II, August 2014.
4 Source: City of Alachua July 2016 Development Monitoring Report.

Consistency: The impacts generated by the development will not adversely affect the Level of Service (LOS) of the roadway segment identified above.

Hydrant Flow Test Report

Test Date 9/28/2016 **Test Time** 11:30am

Location

Holiday Inn - Alachua

Tested by

Gator Fire Equipment
1032 S. Main Street
Gainesville, FL 32601
Tester: John Mallard
Witness: Lance Ashby

Notes

Reading Hydrant: 16130 NW US Hwy 441
Flowing Hydrant: SE corner of 235A & 441

Read Hydrant

81 psi **static pressure**
56 psi **residual pressure**
0 ft **hydrant elevation**

Flow Hydrant(s)

Outlet	Elev	Size	C	Pitot Pressure	Flow
#1	10	2.5	.9	22	787 gpm

Flow Graph

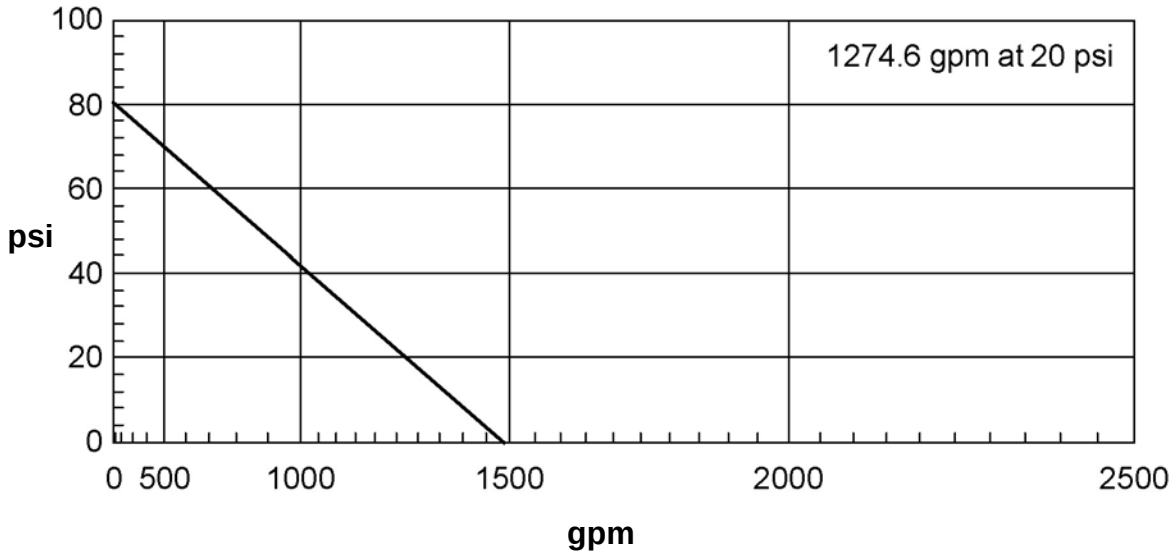

UNIVERSAL FIRE SYSTEMS INC.
374 Hobbs Road ● Tampa, FL 33619
(813) 662-9200 ● Fax 662-0080

October 28, 2016

City of Alachua,
RE: Holiday Inn Express & Suites
Fire Sprinkler Design

Universal Fire is the fire sprinkler contractor for this project. We have reviewed the plans and we will be installing all quick response heads on this project.

If you have any questions, please call.

Respectfully,
UNIVERSAL FIRE SYSTEMS, INC.

Aaron Jones

PROJECT NAME B4-093-1602 - HOLIDAY INN EXPRESS & SUITES - ALACHUA, FL

Estimated Connected Electrical Loads								
Building	**No of Keys**	**Area Sq. Ft (Approx)**	**Lighting (VA/SqFt) as per ECBC Table 7.3.1 & 7.3.2**	**Lighting Load**	**General Purpose Receptacle Load (VA/SqFt) as per IEEE Table 6.1.2**	**General Purpose Receptacle Load**	**HVAC Load (VA/SqFt) as per IEEE Table 6.1.4 & 6.1.5**	**HVAC Load**
HIE Alachua	92 Keys	53650	1.3	69745	1.0	53650.0	6.0	321900

Electrical Demand Calculation - Towne Place				
DESCRIPTION	**CONNECTED LOAD IN KVA**	**DEMAND FACTOR**	**DEMAND LOAD IN KVA**	**REMARK**
LIGHTING	70	1.0	70	
RCPT	54	AS PER NEC 220.44	32	AS PER NEC 220.44
HVAC	322	1.0	322	AS PER NEC 220.82
MOTOR				AS PER NEC 430.24
PLUMBING	90	1.0	90	
ELEVATOR	48	1.0	48	
TOTAL	**584**		**562**	
DESIGN MARGIN@20%			**674**	
PROPOSED TRANSFORMER : 750 kVA				

Cree Edge™ Series

LED Area/Flood Luminaire

HOLIDAY INN
ALACHUA
TYPE P3

Product Description

The Cree Edge™ Series has a slim, low profile design. Its rugged cast aluminum housing minimizes wind load requirements and features an integral, weathertight LED driver compartment and high performance aluminum heat sinks. Various mounting choices: Adjustable Arm, Direct Arm, Direct Arm Long, or Side Arm (details on page 2). Includes a leaf/debris guard.

Applications: Parking lots, walkways, campuses, car dealerships, office complexes, and internal roadways

Performance Summary

- Patented NanoOptic® Product Technology
- Made in the U.S.A. of U.S. and imported parts
- **CRI:** Minimum 70 CRI
- **CCT:** 4000K (+/- 300K), 5700K (+/- 500K) standard
- **Limited Warranty†:** 10 years on luminaire/10 years on Colorfast DeltaGuard® finish

† See http://lighting.cree.com/warranty for warranty terms

Accessories

Field-Installed	
Bird Spikes XA-BRDSPK **Hand-Held Remote** XA-SENSREM - For successful implementation of the programmable multi-level option, a minimum of one hand-held remote is required	**Backlight Control Shields** XA-20BLS-4 - Four-pack - Unpainted stainless steel

DA Mount

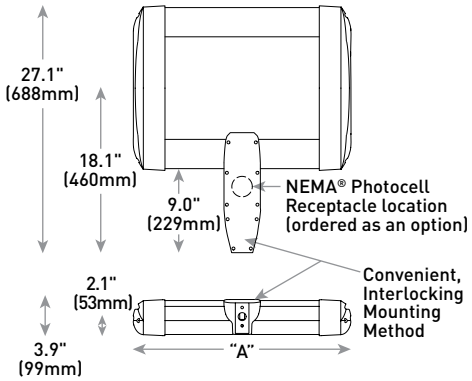

LED Count (x10)	Dim. "A"	Weight
02	12.1" (306mm)	21 lbs. (10kg)
04	12.1" (306mm)	24 lbs. (11kg)
06	14.1" (357mm)	27 lbs. (12kg)
08	16.1" (408mm)	28 lbs. (13kg)
10	18.1" (459mm)	32 lbs. (15kg)
12	20.1" (510mm)	34 lbs. (15kg)
14	22.1" (560mm)	37 lbs. (17kg)
16	24.1" (611mm)	41 lbs. (19kg)

AA/DL/SA Mount - see page 22 for weight & dimensions

Ordering Information

Example: ARE-EDG-2M-AA-12-E-UL-SV-350

					E				
Product	**Optic**			**Mounting***	**LED Count (x10)**	**Series**	**Voltage**	**Color Options**	**Drive Current**	**Options**
ARE-EDG	**2M** Type II Medium **2MB** Type II Medium w/BLS **2MP** Type II Medium w/Partial BLS **3M** Type III Medium	**3MB** Type III Medium w/BLS **3MP** Type III Medium w/Partial BLS **4M** Type IV Medium **4MB** Type IV Medium w/BLS	**4MP** Type IV Medium w/Partial BLS **5M** Type V Medium **5S** Type V Short	**AA** Adjustable Arm **DA** Direct Arm **DL** Direct Long Arm	**02** **04** **06** **08** **10** **12** **14** **16**	**E**	**UL** Universal 120-277V **UH** Universal 347-480V	**BK** Black **BZ** Bronze **SV** Silver **WH** White	**350** 350mA **525** 525mA **700** 700mA - Available with 20-60 LEDs	**DIM 0-10V Dimming** - Control by others - Refer to Dimming spec sheet for details - Can't exceed specified drive current **F Fuse** - Refer to ML spec sheet for availability with ML options - Available with UL voltage only - Available for U.S. applications only - When code dictates fusing, use time delay fuse **HL Hi/Low (Dual Circuit Input)** - Refer to HL spec sheet for details - Sensor not included **ML Multi-Level** - Refer to ML spec sheet for details - Intended for downlight applications at 0° tilt **P Photocell** - Refer to ML spec sheet for availability with ML options - Available with UL voltage only **PML Programmable Multi-Level, 20-40' Mounting Height** - Refer to PML spec sheet for details - Intended for downlight applications at 0° tilt **PML2 Programmable Multi-Level, 10-30' Mounting Height** - Refer to PML spec sheet for details - Intended for downlight applications at 0° tilt **R NEMA® Photocell Receptacle** - Intended for downlight applications with maximum 45° tilt - Photocell by others - Refer to ML spec sheet for availability with ML options **40K 4000K Color Temperature** - Minimum 70 CRI - Color temperature per luminaire
FLD-EDG	**25** 25° Flood **40** 40° Flood	**70** 70° Flood **SN** Sign	**N6** NEMA® 6	**AA** Adjustable Arm **SA** Side Arm - Available with 20-60 LEDs						

* Reference EPA and pole configuration suitability data beginning on page 19
NOTE: Price adder may apply depending on configuration

HOLIDAY INN
ALACHUA
TYPE P3

Product Specifications

CONSTRUCTION & MATERIALS

- Slim, low profile, minimizing wind load requirements
- Luminaire sides are rugged die cast aluminum with integral, weathertight LED driver compartment and high performance heat sinks
- DA and DL mount utilizes convenient interlocking mounting method. Mounting is rugged die cast aluminum, mounts to 3-6" (76-152mm) square or round pole and secures to pole with 5/16-18 UNC bolts spaced on 2" (51mm) centers
- AA and SA mounts are rugged die cast aluminum and mount to 2" (51mm) IP, 2.375" (60mm) O.D. tenons
- Includes leaf/debris guard
- Exclusive Colorfast DeltaGuard® finish features an E-Coat epoxy primer with an ultra-durable powder topcoat, providing excellent resistance to corrosion, ultraviolet degradation and abrasion. Black, bronze, silver, and white are available
- **Weight:** See Dimensions and Weight Charts on pages 1 and 22

ELECTRICAL SYSTEM

- **Input Voltage:** 120-277V or 347-480V, 50/60Hz, Class 1 drivers
- **Power Factor:** > 0.9 at full load
- **Total Harmonic Distortion:** < 20% at full load
- DA and DL mounts designed with integral weathertight electrical box with terminal strips (12Ga–20Ga) for easy power hookup
- Integral 10kV surge suppression protection standard
- When code dictates fusing, a slow blow fuse or type C/D breaker should be used to address inrush current
- **Maximum 10V Source Current:** 20 LED (350mA): 10mA; 20 LED (525 & 700mA) and 40-80 LED: 0.15mA; 100-160 LED: 0.30mA

REGULATORY & VOLUNTARY QUALIFICATIONS

- cULus Listed
- Suitable for wet locations
- Enclosure rated IP66 per IEC 60529 when ordered without P or R options
- Consult factory for CE Certified products
- Certified to ANSI C136.31-2001, 3G bridge and overpass vibration standards when ordered with AA, DA and DL mounts
- 10kV surge suppression protection tested in accordance with IEEE/ANSI C62.41.2
- Meets FCC Part 15, Subpart B, Class A standards for conducted and radiated emissions
- Luminaire and finish endurance tested to withstand 5,000 hours of elevated ambient salt fog conditions as defined in ASTM Standard B 117
- DLC qualified. Exceptions apply when ordered with full backlight control or 3MP optic with 20 LEDs. Please refer to www.designlights.org/QPL for most current information
- Meets Buy American requirements within ARRA

Electrical Data*

LED Count (x10)	System Watts 120-480V	Total Current (A)					
		120V	208V	240V	277V	347V	480V
350mA							
02	25	0.21	0.13	0.11	0.10	0.08	0.07
04	46	0.36	0.23	0.21	0.20	0.15	0.12
06	66	0.52	0.31	0.28	0.26	0.20	0.15
08	90	0.75	0.44	0.38	0.34	0.26	0.20
10	110	0.92	0.53	0.47	0.41	0.32	0.24
12	130	1.10	0.63	0.55	0.48	0.38	0.28
14	158	1.32	0.77	0.68	0.62	0.47	0.35
16	179	1.49	0.87	0.77	0.68	0.53	0.39
525mA							
02	37	0.30	0.19	0.17	0.16	0.12	0.10
04	70	0.58	0.34	0.31	0.28	0.21	0.16
06	101	0.84	0.49	0.43	0.38	0.30	0.22
08	133	1.13	0.66	0.58	0.51	0.39	0.28
10	171	1.43	0.83	0.74	0.66	0.50	0.38
12	202	1.69	0.98	0.86	0.77	0.59	0.44
14	232	1.94	1.12	0.98	0.87	0.68	0.50
16	263	2.21	1.27	1.11	0.97	0.77	0.56
700mA							
02	50	0.41	0.25	0.22	0.20	0.15	0.12
04	93	0.78	0.46	0.40	0.36	0.27	0.20
06	134	1.14	0.65	0.57	0.50	0.39	0.29

* Electrical data at 25°C (77°F). Actual wattage may differ by +/- 10% when operating between 120-480V +/- 10%

Recommended Cree Edge™ Series Lumen Maintenance Factors (LMF)[1]

Ambient	Initial LMF	25K hr Projected[2] LMF	50K hr Projected[2] LMF	75K hr Calculated[3] LMF	100K hr Calculated[3] LMF
5°C (41°F)	1.04	1.01	0.99	0.98	0.96
10°C (50°F)	1.03	1.00	0.98	0.97	0.95
15°C (59°F)	1.02	0.99	0.97	0.96	0.94
20°C (68°F)	1.01	0.98	0.96	0.95	0.93
25°C (77°F)	1.00	0.97	0.95	0.94	0.92

[1] Lumen maintenance values at 25°C are calculated per TM-21 based on LM-80 data and in-situ luminaire testing
[2] In accordance with IESNA TM-21-11, Projected Values represent interpolated value based on time durations that are within six times
(6X) the IESNA LM-80-08 total test duration (in hours) for the device under testing ((DUT) i.e. the packaged LED chip)
[3] In accordance with IESNA TM-21-11, Calculated Values represent time durations that exceed six times (6X) the IESNA LM-80-08 total test duration (in hours) for the device under testing ((DUT) i.e. the packaged LED chip)

HOLIDAY INN
ALACHUA
TYPE P3

Photometry

All published luminaire photometric testing performed to IESNA LM-79-08 standards by a NVLAP accredited laboratory. To obtain an IES file specific to your project consult: http://lighting.cree.com/products/outdoor/area/cree-edge-series-1

3MB

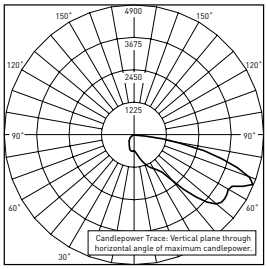

CSA Test Report #: 6448
ARE-EDG-3MB-**-06-E-UL-700
Initial Delivered Lumens: 7,740

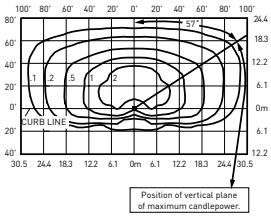

ARE-EDG-3MB-**-10-E-UL-525-40K
Mounting Height: 25' (7.6m) A.F.G.
Initial Delivered Lumens: 12,275
Initial FC at grade

Type III Medium Distribution w/BLS				
LED Count (x10)	4000K		5700K	
	Initial Delivered Lumens*	BUG Ratings** Per TM-15-11	Initial Delivered Lumens*	BUG Ratings** Per TM-15-11
350mA				
02	1,754	B0 U0 G1	1,789	B0 U0 G1
04	3,508	B1 U0 G1	3,578	B1 U0 G1
06	5,202	B1 U0 G2	5,305	B1 U0 G2
08	6,936	B1 U0 G2	7,074	B1 U0 G2
10	8,650	B1 U0 G2	8,821	B1 U0 G2
12	10,380	B1 U0 G3	10,585	B1 U0 G3
14	12,033	B1 U0 G3	12,272	B1 U0 G3
16	13,752	B2 U0 G3	14,025	B2 U0 G3
525mA				
02	2,489	B0 U0 G1	2,542	B0 U0 G1
04	4,979	B1 U0 G2	5,083	B1 U0 G2
06	7,383	B1 U0 G2	7,538	B1 U0 G2
08	9,844	B1 U0 G2	10,050	B1 U0 G3
10	12,275	B1 U0 G3	12,532	B1 U0 G3
12	14,730	B2 U0 G3	15,039	B2 U0 G3
14	17,077	B2 U0 G3	17,434	B2 U0 G3
16	19,516	B2 U0 G3	19,925	B2 U0 G3
700mA				
02	2,938	B1 U0 G1	2,998	B1 U0 G1
04	5,876	B1 U0 G2	5,996	B1 U0 G2
06	8,714	B1 U0 G2	8,891	B1 U0 G2

* Initial delivered lumens at 25°C (77°F). Actual production yield may vary between -10 and +10% of initial delivered lumens
** For more information on the IES BUG (Backlight-Uplight-Glare) Rating visit: www.ies.org/PDF/Erratas/TM-15-11BugRatingsAddendum.pdf. Valid with no tilt

HOLIDAY INN
ALACHUA
TYPE P3

Luminaire EPA

Fixed Arm Mount – ARE-EDG-DA						
LED Count (x10)	Single	2 @ 90°	2 @ 180°	3 @ 90°	3 @ 120°	4 @ 90°
						
02	0.60	0.87	1.20	1.47	1.47	1.75
04	0.60	0.87	1.20	1.47	1.47	1.75
06	0.60	0.92	1.20	1.51	1.51	1.83
08	0.60	0.96 N/A with 3" poles	1.20	1.55 N/A with 3" poles	1.55	1.91 N/A with 3" poles
10	0.60	1.00 N/A with 3" poles	1.20	1.60 N/A with 3" poles	1.60	2.00 N/A with 3" poles
12	0.60	1.04 N/A with 3" poles	1.20	1.64 N/A with 3" poles	1.64	2.08 N/A with 3" poles
14	0.60	1.08 N/A with 3" or 4" poles	1.20	1.68 N/A with 3" or 4" poles	1.68	2.16 N/A with 3" or 4" poles
16	0.60	1.12 N/A with 3" or 4" poles	1.20	1.72 N/A with 3" or 4" poles	1.72	2.24 N/A with 3" or 4" poles
Fixed Arm Mount – ARE-EDG-DL						
02	0.75	1.02	1.50	1.77	1.77	1.91
04	0.75	1.02	1.50	1.77	1.77	1.91
06	0.75	1.07	1.50	1.82	1.82	1.98
08	0.75	1.11	1.50	1.86	1.86	2.04
10	0.75	1.15	1.50	1.90	1.90	2.10
12	0.75	1.19	1.50	1.94	1.94	2.16
14	0.75	1.23	1.50	1.98	1.98	2.22
16	0.75	1.27	1.50	2.02	2.02	2.28

Adjustable Arm Mount – ARE-EDG-AA/FLD-EDG-AA/SA									
LED Count (x10)	Single	2 @ 90°	2 @ 180°	In-Line 2 @ 180°	3 @ 90°	3 @ 120°	In-Line 3 @ 180°	4 @ 90°	In-Line 4 @ 180°
Tenon Configuration If used with Cree tenons, please add tenon EPA with Luminaire EPA									
									
	Vertical: PB-1A*; PT-1; PW-1A3** Horizontal: By others	Vertical: PB-2A*; PB-2R2.375; PW-2A3** Horizontal: PD-2A4(90); PT-2(90)	Vertical: PB-2A*; PB-2R2.375; PW-2A3** Horizontal: PD-2A4(180); PT-2(180)	Vertical: PB-2A*; PB-2R2.375	Vertical: PB-3A*; PB-3R2.375 Horizontal: PD-3A4(90); PT-3(90)	Vertical: PB-3A*; PB-3R2.375 Horizontal: PT-3(120)	Vertical: PB-3A*; PB-3R2.375	Vertical: PB-4A*(90); PB-4R2.375 Horizontal: PD-4A4(90) PT-4(90)	Vertical: PB-4A*(180); PB-4R2.375
0° Tilt									
02	0.66	0.98	1.32	1.32	1.77	1.64	1.98	1.91	2.64
04	0.66	0.98	1.32	1.32	1.64	1.64	1.98	1.97	2.64
06	0.66	1.02	1.32	1.32	1.68	1.68	1.98	2.05	2.64
08	0.66	1.07	1.32	1.32	1.80	1.72	1.98	2.29	2.64
10	0.66	1.11	1.32	1.32	1.76	1.76	1.98	2.21	2.64
12	0.66	1.15	1.32	1.32	1.80	1.80	1.98	2.29	2.64
14	0.66	1.19	1.32	1.32	1.84	1.84	1.98	2.38	2.64
16	0.66	1.23	1.32	N/A	1.89	1.89	N/A	2.46	N/A

* Specify pole size: 3 (3"), 4 (4"), 5 (5"), or 6 (6") for single, double or triple luminaire orientation or 4 (4"), 5 (5"), or 6 (6") for quad luminaire orientation
** These EPA values must be multiplied by the following ratio: Fixture Mounting Height/Total Pole Height. Specify pole size: 3 (3"), 4 (4"), 5 (5"), or 6 (6")

HOLIDAY INN
ALACHUA
TYPE P3

AA Mount

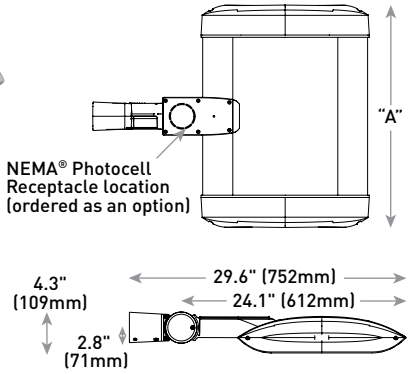

LED Count (x10)	Dim. "A"	Weight
02	12.1" (306mm)	21 lbs. (10kg)
04	12.1" (306mm)	24 lbs. (11kg)
06	14.1" (357mm)	27 lbs. (12kg)
08	16.1" (408mm)	28 lbs. (13kg)
10	18.1" (459mm)	32 lbs. (15kg)
12	20.1" (510mm)	34 lbs. (15kg)
14	22.1" (560mm)	37 lbs. (17kg)
16	24.1" (611mm)	41 lbs. (19kg)

DL Mount

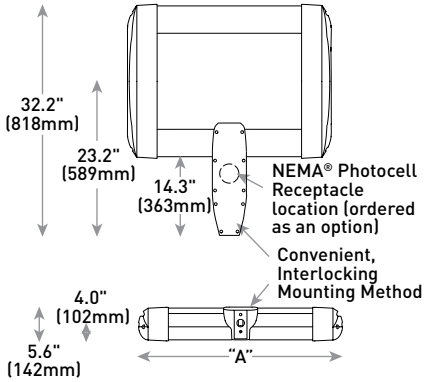

LED Count (x10)	Dim. "A"	Weight
02	12.1" (306mm)	23 lbs. (10kg)
04	12.1" (306mm)	26 lbs. (12kg)
06	14.1" (357mm)	29 lbs. (13kg)
08	16.1" (408mm)	30 lbs. (14kg)
10	18.1" (459mm)	34 lbs. (15kg)
12	20.1" (510mm)	36 lbs. (16kg)
14	22.1" (560mm)	42 lbs. (19kg)
16	24.1" (611mm)	44 lbs. (20kg)

SA Mount

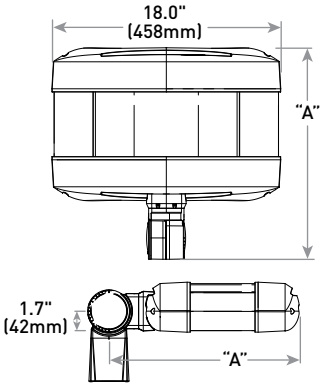

LED Count (x10)	Dim. "A"	Weight
02	16.0" (406mm)	25 lbs. (11kg)
04	18.0" (457mm)	26 lbs. (12kg)
06	20.0" (508mm)	28 lbs. (13kg)

US: lighting.cree.com/lighting T (800) 236-6800 F (262) 504-5415

Canada: www.cree.com/canada T (800) 473-1234 F (800) 890-7507

Cree Edge™ Series

LED Area/Flood Luminaire

HOLIDAY INN
ALACHUA
TYPE P4T

Product Description

The Cree Edge™ Series has a slim, low profile design. Its rugged cast aluminum housing minimizes wind load requirements and features an integral, weathertight LED driver compartment and high performance aluminum heat sinks. Various mounting choices: Adjustable Arm, Direct Arm, Direct Arm Long, or Side Arm (details on page 2). Includes a leaf/debris guard.
Applications: Parking lots, walkways, campuses, car dealerships, office complexes, and internal roadways

Performance Summary

- Patented NanoOptic® Product Technology
- Made in the U.S.A. of U.S. and imported parts
- **CRI:** Minimum 70 CRI
- **CCT:** 4000K (+/- 300K), 5700K (+/- 500K) standard
- **Limited Warranty†:** 10 years on luminaire/10 years on Colorfast DeltaGuard® finish

† See http://lighting.cree.com/warranty for warranty terms

Accessories

Field-Installed	
Bird Spikes XA-BRDSPK **Hand-Held Remote** XA-SENSREM - For successful implementation of the programmable multi-level option, a minimum of one hand-held remote is required	**Backlight Control Shields** XA-20BLS-4 - Four-pack - Unpainted stainless steel

DA Mount

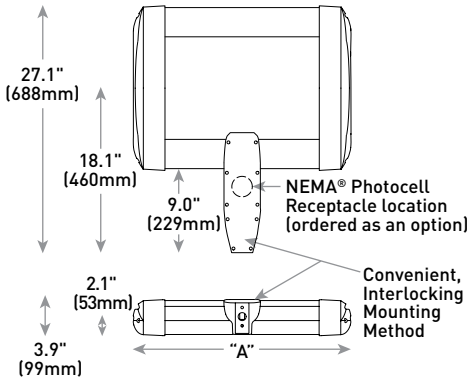

LED Count (x10)	Dim. "A"	Weight
02	12.1" (306mm)	21 lbs. (10kg)
04	12.1" (306mm)	24 lbs. (11kg)
06	14.1" (357mm)	27 lbs. (12kg)
08	16.1" (408mm)	28 lbs. (13kg)
10	18.1" (459mm)	32 lbs. (15kg)
12	20.1" (510mm)	34 lbs. (15kg)
14	22.1" (560mm)	37 lbs. (17kg)
16	24.1" (611mm)	41 lbs. (19kg)

AA/DL/SA Mount - see page 22 for weight & dimensions

Ordering Information

Example: ARE-EDG-2M-AA-12-E-UL-SV-350

					E				
Product	**Optic**			**Mounting***	**LED Count (x10)**	**Series**	**Voltage**	**Color Options**	**Drive Current**	**Options**
ARE-EDG	**2M** Type II Medium **2MB** Type II Medium w/BLS **2MP** Type II Medium w/Partial BLS **3M** Type III Medium	**3MB** Type III Medium w/BLS **3MP** Type III Medium w/Partial BLS **4M** Type IV Medium **4MB** Type IV Medium w/BLS	**4MP** Type IV Medium w/Partial BLS **5M** Type V Medium **5S** Type V Short	**AA** Adjustable Arm **DA** Direct Arm **DL** Direct Long Arm	**02** **04** **06** **08** **10** **12** **14** **16**	**E**	**UL** Universal 120-277V **UH** Universal 347-480V	**BK** Black **BZ** Bronze **SV** Silver **WH** White	**350** 350mA **525** 525mA **700** 700mA - Available with 20-60 LEDs	**DIM 0-10V Dimming** - Control by others - Refer to Dimming spec sheet for details - Can't exceed specified drive current **F Fuse** - Refer to ML spec sheet for availability with ML options - Available with UL voltage only - Available for U.S. applications only - When code dictates fusing, use time delay fuse **HL Hi/Low (Dual Circuit Input)** - Refer to HL spec sheet for details - Sensor not included **ML Multi-Level** - Refer to ML spec sheet for details - Intended for downlight applications at 0° tilt **P Photocell** - Refer to ML spec sheet for availability with ML options - Available with UL voltage only **PML Programmable Multi-Level, 20-40' Mounting Height** - Refer to PML spec sheet for details - Intended for downlight applications at 0° tilt **PML2 Programmable Multi-Level, 10-30' Mounting Height** - Refer to PML spec sheet for details - Intended for downlight applications at 0° tilt **R NEMA® Photocell Receptacle** - Intended for downlight applications with maximum 45° tilt - Photocell by others - Refer to ML spec sheet for availability with ML options **40K 4000K Color Temperature** - Minimum 70 CRI - Color temperature per luminaire
FLD-EDG	**25** 25° Flood **40** 40° Flood	**70** 70° Flood **SN** Sign	**N6** NEMA® 6	**AA** Adjustable Arm **SA** Side Arm - Available with 20-60 LEDs						

* Reference EPA and pole configuration suitability data beginning on page 19
NOTE: Price adder may apply depending on configuration

HOLIDAY INN
ALACHUA
TYPE P4T

Product Specifications

CONSTRUCTION & MATERIALS

- Slim, low profile, minimizing wind load requirements
- Luminaire sides are rugged die cast aluminum with integral, weathertight LED driver compartment and high performance heat sinks
- DA and DL mount utilizes convenient interlocking mounting method. Mounting is rugged die cast aluminum, mounts to 3-6" (76-152mm) square or round pole and secures to pole with 5/16-18 UNC bolts spaced on 2" (51mm) centers
- AA and SA mounts are rugged die cast aluminum and mount to 2" (51mm) IP, 2.375" (60mm) O.D. tenons
- Includes leaf/debris guard
- Exclusive Colorfast DeltaGuard® finish features an E-Coat epoxy primer with an ultra-durable powder topcoat, providing excellent resistance to corrosion, ultraviolet degradation and abrasion. Black, bronze, silver, and white are available
- **Weight:** See Dimensions and Weight Charts on pages 1 and 22

ELECTRICAL SYSTEM

- **Input Voltage:** 120-277V or 347-480V, 50/60Hz, Class 1 drivers
- **Power Factor:** > 0.9 at full load
- **Total Harmonic Distortion:** < 20% at full load
- DA and DL mounts designed with integral weathertight electrical box with terminal strips (12Ga–20Ga) for easy power hookup
- Integral 10kV surge suppression protection standard
- When code dictates fusing, a slow blow fuse or type C/D breaker should be used to address inrush current
- **Maximum 10V Source Current:** 20 LED (350mA): 10mA; 20 LED (525 & 700mA) and 40-80 LED: 0.15mA; 100-160 LED: 0.30mA

REGULATORY & VOLUNTARY QUALIFICATIONS

- cULus Listed
- Suitable for wet locations
- Enclosure rated IP66 per IEC 60529 when ordered without P or R options
- Consult factory for CE Certified products
- Certified to ANSI C136.31-2001, 3G bridge and overpass vibration standards when ordered with AA, DA and DL mounts
- 10kV surge suppression protection tested in accordance with IEEE/ANSI C62.41.2
- Meets FCC Part 15, Subpart B, Class A standards for conducted and radiated emissions
- Luminaire and finish endurance tested to withstand 5,000 hours of elevated ambient salt fog conditions as defined in ASTM Standard B 117
- DLC qualified. Exceptions apply when ordered with full backlight control or 3MP optic with 20 LEDs. Please refer to www.designlights.org/QPL for most current information
- Meets Buy American requirements within ARRA

Electrical Data*

LED Count (x10)	System Watts 120-480V	Total Current (A)					
		120V	208V	240V	277V	347V	480V
350mA							
02	25	0.21	0.13	0.11	0.10	0.08	0.07
04	46	0.36	0.23	0.21	0.20	0.15	0.12
06	66	0.52	0.31	0.28	0.26	0.20	0.15
08	90	0.75	0.44	0.38	0.34	0.26	0.20
10	110	0.92	0.53	0.47	0.41	0.32	0.24
12	130	1.10	0.63	0.55	0.48	0.38	0.28
14	158	1.32	0.77	0.68	0.62	0.47	0.35
16	179	1.49	0.87	0.77	0.68	0.53	0.39
525mA							
02	37	0.30	0.19	0.17	0.16	0.12	0.10
04	70	0.58	0.34	0.31	0.28	0.21	0.16
06	101	0.84	0.49	0.43	0.38	0.30	0.22
08	133	1.13	0.66	0.58	0.51	0.39	0.28
10	171	1.43	0.83	0.74	0.66	0.50	0.38
12	202	1.69	0.98	0.86	0.77	0.59	0.44
14	232	1.94	1.12	0.98	0.87	0.68	0.50
16	263	2.21	1.27	1.11	0.97	0.77	0.56
700mA							
02	50	0.41	0.25	0.22	0.20	0.15	0.12
04	93	0.78	0.46	0.40	0.36	0.27	0.20
06	134	1.14	0.65	0.57	0.50	0.39	0.29

* Electrical data at 25°C (77°F). Actual wattage may differ by +/- 10% when operating between 120-480V +/- 10%

Recommended Cree Edge™ Series Lumen Maintenance Factors (LMF)[1]

Ambient	Initial LMF	25K hr Projected[2] LMF	50K hr Projected[2] LMF	75K hr Calculated[3] LMF	100K hr Calculated[3] LMF
5°C (41°F)	1.04	1.01	0.99	0.98	0.96
10°C (50°F)	1.03	1.00	0.98	0.97	0.95
15°C (59°F)	1.02	0.99	0.97	0.96	0.94
20°C (68°F)	1.01	0.98	0.96	0.95	0.93
25°C (77°F)	1.00	0.97	0.95	0.94	0.92

[1] Lumen maintenance values at 25°C are calculated per TM-21 based on LM-80 data and in-situ luminaire testing
[2] In accordance with IESNA TM-21-11, Projected Values represent interpolated value based on time durations that are within six times
(6X) the IESNA LM-80-08 total test duration (in hours) for the device under testing ((DUT) i.e. the packaged LED chip)
[3] In accordance with IESNA TM-21-11, Calculated Values represent time durations that exceed six times (6X) the IESNA LM-80-08 total test duration (in hours) for the device under testing ((DUT) i.e. the packaged LED chip)

HOLIDAY INN
ALACHUA
TYPE P4T

Photometry

All published luminaire photometric testing performed to IESNA LM-79-08 standards by a NVLAP accredited laboratory. To obtain an IES file specific to your project consult: http://lighting.cree.com/products/outdoor/area/cree-edge-series-1

4M

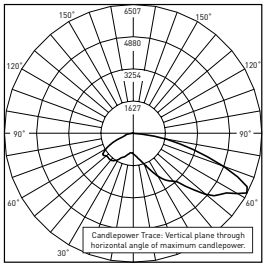

CSA Test Report #: 6438
ARE-EDG-4M-**-06-E-UL-700-40K
Initial Delivered Lumens: 11,367

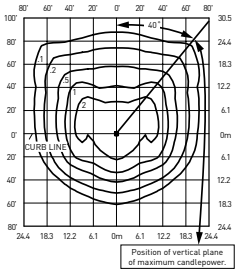

ARE-EDG-4M-**-10-E-UL-525-40K
Mounting Height: 25' (7.6m) A.F.G.
Initial Delivered Lumens: 17,504
Initial FC at grade

Type IV Medium Distribution				
LED Count (x10)	4000K		5700K	
	Initial Delivered Lumens*	BUG Ratings** Per TM-15-11	Initial Delivered Lumens*	BUG Ratings** Per TM-15-11
350mA				
02	2,501	B1 U0 G1	2,551	B1 U0 G1
04	5,003	B2 U0 G1	5,102	B2 U0 G1
06	7,418	B2 U0 G2	7,565	B2 U0 G2
08	9,891	B2 U0 G2	10,087	B2 U0 G2
10	12,334	B3 U0 G3	12,578	B3 U0 G3
12	14,801	B3 U0 G3	15,094	B3 U0 G3
14	17,158	B3 U0 G3	17,498	B3 U0 G3
16	19,609	B3 U0 G3	19,998	B3 U0 G3
525mA				
02	3,550	B1 U0 G1	3,624	B1 U0 G1
04	7,099	B2 U0 G2	7,248	B2 U0 G2
06	10,527	B2 U0 G2	10,748	B2 U0 G2
08	14,037	B3 U0 G3	14,331	B3 U0 G3
10	17,504	B3 U0 G3	17,870	B3 U0 G3
12	21,004	B3 U0 G3	21,444	B3 U0 G3
14	24,350	B4 U0 G3	24,860	B4 U0 G3
16	27,828	B4 U0 G3	28,411	B4 U0 G3
700mA				
02	4,189	B1 U0 G1	4,275	B1 U0 G1
04	8,379	B2 U0 G2	8,549	B2 U0 G2
06	12,425	B3 U0 G3	12,678	B3 U0 G3

* Initial delivered lumens at 25°C (77°F). Actual production yield may vary between -10 and +10% of initial delivered lumens
** For more information on the IES BUG (Backlight-Uplight-Glare) Rating visit: www.ies.org/PDF/Erratas/TM-15-11BugRatingsAddendum.pdf. Valid with no tilt

HOLIDAY INN
ALACHUA
TYPE P4T

Luminaire EPA

Fixed Arm Mount – ARE-EDG-DA						
LED Count (x10)	Single	2 @ 90°	2 @ 180°	3 @ 90°	3 @ 120°	4 @ 90°
						
02	0.60	0.87	1.20	1.47	1.47	1.75
04	0.60	0.87	1.20	1.47	1.47	1.75
06	0.60	0.92	1.20	1.51	1.51	1.83
08	0.60	0.96 N/A with 3" poles	1.20	1.55 N/A with 3" poles	1.55	1.91 N/A with 3" poles
10	0.60	1.00 N/A with 3" poles	1.20	1.60 N/A with 3" poles	1.60	2.00 N/A with 3" poles
12	0.60	1.04 N/A with 3" poles	1.20	1.64 N/A with 3" poles	1.64	2.08 N/A with 3" poles
14	0.60	1.08 N/A with 3" or 4" poles	1.20	1.68 N/A with 3" or 4" poles	1.68	2.16 N/A with 3" or 4" poles
16	0.60	1.12 N/A with 3" or 4" poles	1.20	1.72 N/A with 3" or 4" poles	1.72	2.24 N/A with 3" or 4" poles
Fixed Arm Mount – ARE-EDG-DL						
02	0.75	1.02	1.50	1.77	1.77	1.91
04	0.75	1.02	1.50	1.77	1.77	1.91
06	0.75	1.07	1.50	1.82	1.82	1.98
08	0.75	1.11	1.50	1.86	1.86	2.04
10	0.75	1.15	1.50	1.90	1.90	2.10
12	0.75	1.19	1.50	1.94	1.94	2.16
14	0.75	1.23	1.50	1.98	1.98	2.22
16	0.75	1.27	1.50	2.02	2.02	2.28

Adjustable Arm Mount – ARE-EDG-AA/FLD-EDG-AA/SA									
LED Count (x10)	Single	2 @ 90°	2 @ 180°	In-Line 2 @ 180°	3 @ 90°	3 @ 120°	In-Line 3 @ 180°	4 @ 90°	In-Line 4 @ 180°
Tenon Configuration If used with Cree tenons, please add tenon EPA with Luminaire EPA									
									
	Vertical: PB-1A*; PT-1; PW-1A3** Horizontal: By others	Vertical: PB-2A*; PB-2R2.375; PW-2A3** Horizontal: PD-2A4(90); PT-2(90)	Vertical: PB-2A*; PB-2R2.375; PW-2A3** Horizontal: PD-2A4(180); PT-2(180)	Vertical: PB-2A*; PB-2R2.375	Vertical: PB-3A*; PB-3R2.375 Horizontal: PD-3A4(90); PT-3(90)	Vertical: PB-3A*; PB-3R2.375 Horizontal: PT-3(120)	Vertical: PB-3A*; PB-3R2.375	Vertical: PB-4A*(90); PB-4R2.375 Horizontal: PD-4A4(90) PT-4(90)	Vertical: PB-4A*(180); PB-4R2.375
0° Tilt									
02	0.66	0.98	1.32	1.32	1.77	1.64	1.98	1.91	2.64
04	0.66	0.98	1.32	1.32	1.64	1.64	1.98	1.97	2.64
06	0.66	1.02	1.32	1.32	1.68	1.68	1.98	2.05	2.64
08	0.66	1.07	1.32	1.32	1.80	1.72	1.98	2.29	2.64
10	0.66	1.11	1.32	1.32	1.76	1.76	1.98	2.21	2.64
12	0.66	1.15	1.32	1.32	1.80	1.80	1.98	2.29	2.64
14	0.66	1.19	1.32	1.32	1.84	1.84	1.98	2.38	2.64
16	0.66	1.23	1.32	N/A	1.89	1.89	N/A	2.46	N/A

* Specify pole size: 3 (3"), 4 (4"), 5 (5"), or 6 (6") for single, double or triple luminaire orientation or 4 (4"), 5 (5"), or 6 (6") for quad luminaire orientation
** These EPA values must be multiplied by the following ratio: Fixture Mounting Height/Total Pole Height. Specify pole size: 3 (3"), 4 (4"), 5 (5"), or 6 (6")

HOLIDAY INN
ALACHUA
TYPE P4T

AA Mount

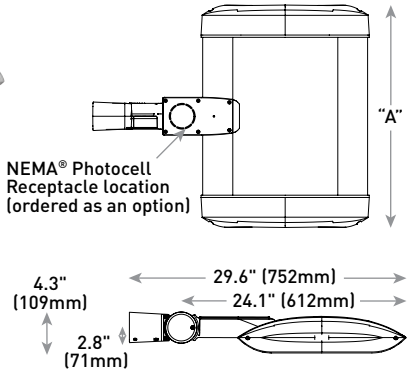

LED Count (x10)	Dim. "A"	Weight
02	12.1" (306mm)	21 lbs. (10kg)
04	12.1" (306mm)	24 lbs. (11kg)
06	14.1" (357mm)	27 lbs. (12kg)
08	16.1" (408mm)	28 lbs. (13kg)
10	18.1" (459mm)	32 lbs. (15kg)
12	20.1" (510mm)	34 lbs. (15kg)
14	22.1" (560mm)	37 lbs. (17kg)
16	24.1" (611mm)	41 lbs. (19kg)

DL Mount

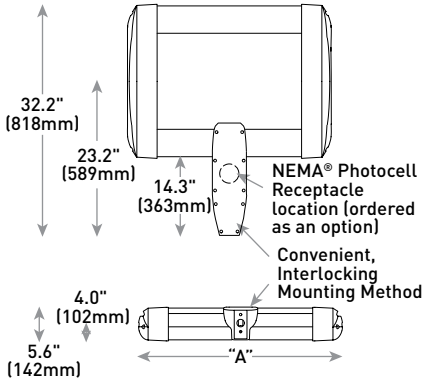

LED Count (x10)	Dim. "A"	Weight
02	12.1" (306mm)	23 lbs. (10kg)
04	12.1" (306mm)	26 lbs. (12kg)
06	14.1" (357mm)	29 lbs. (13kg)
08	16.1" (408mm)	30 lbs. (14kg)
10	18.1" (459mm)	34 lbs. (15kg)
12	20.1" (510mm)	36 lbs. (16kg)
14	22.1" (560mm)	42 lbs. (19kg)
16	24.1" (611mm)	44 lbs. (20kg)

SA Mount

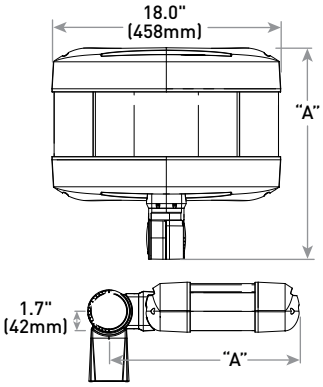

LED Count (x10)	Dim. "A"	Weight
02	16.0" (406mm)	25 lbs. (11kg)
04	18.0" (457mm)	26 lbs. (12kg)
06	20.0" (508mm)	28 lbs. (13kg)

US: lighting.cree.com/lighting T (800) 236-6800 F (262) 504-5415

Canada: www.cree.com/canada T (800) 473-1234 F (800) 890-7507

HOLIDAY INN
ALACHUA
TYPE B

Cree Edge™ Series

LED Pathway Luminaire

Product Description

Durable die-cast aluminum luminaire housing mounts directly to 4" (102mm) diameter pole (included) without visible mounting hardware for clean appearance. Pole mounts to rugged die cast aluminum internal flange secured by three 3/8" - 16x6" anchor bolts with 1-1/4" hook (provided). **Note:** T45 Torx 3/8" socket required for head installation. Top mounted LEDs for superior optical performance and light control.

Applications: Landscape, walk-ways and general site lighting

Performance Summary

- Patented NanoOptic® Product Technology
- Made in the U.S.A. of U.S. and imported parts
- **CRI:** Minimum 70 CRI
- **CCT:** 4000K (+/- 300K), 5700K (+/- 500K) standard
- **Limited Warranty†:** 10 years on luminaire/10 years on Colorfast DeltaGuard® finish

† See http://lighting.cree.com/warranty for warranty terms

Accessories

Field-Installed	
Upgrade Kit - Used for replacement of existing bollards with a bolt hole circle of 5.75" (146mm)	
XA-XBP8RSV	XA-XBP8RWH
XA-XBP8RBK	XA-XBP8RBZ

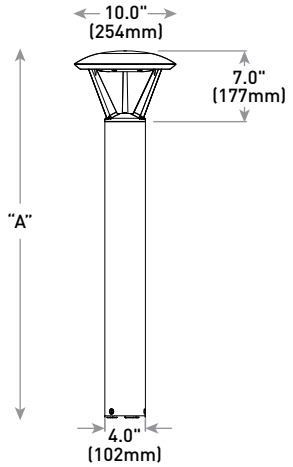

Model	Dim. "A"	Weight*
Landscape (P0)	13" (330mm)	12.7 lbs. (5.8kg)
Landscape (P1)	18" (457mm)	13.3 lbs. (6.0kg)
Pathway (P3)	36" (914mm)	17.9 lbs. (8.1kg)
Pathway (P4)	42" (1068mm)	18.6 lbs. (8.4kg)
Pedestrian (P8)	96" (2438mm)	28.4 lbs (12.9kg)

* Add 4.5 lbs. (2.0kg) for 347-480V

Ordering Information

Example: PWY-EDG-2M-P0-02-E-UL-SV-350

PWY-EDG			02	E				
Product	**Optic**	**Mounting**	**LED Count (x9)**	**Series**	**Voltage**	**Color Options**	**Drive Current**	**Options**
PWY-EDG	**2M** Type II Medium **3M** Type III Medium **5M** Type V Medium **5S** Type V Short	**P0** 13" (330mm) landscape **P1** 18" (457mm) landscape **P3** 36" (914mm) pathway **P4** 42" (1067mm) pathway **P8** 96" (2438mm) pedestrian	02	E	**UL** Universal 120-277V **UH*** Universal 347-480V - Available with P3, P4, and P8 mounts only **12** 120V **27** 277V	**BK** Black **BZ** Bronze **SV** Silver **WH** White	**350** 350mA **525** 525mA - Available with P1, P3, P4, and P8 mounts only	**F Fuse** - When code dictates fusing, use time delay fuse - Refer to ML spec sheet for availability with ML options **HL Hi/Low (Dual Circuit Input)** - Available with UL voltage and 525mA driver current only - Refer to HL spec sheet for details - Sensor not included **TL Two-Level (175/525 w/integrated sensor control)** - Available with 12 or 27 voltages only - Refer to TL spec sheet for details **TL2 Two-Level (0/350 w/integrated sensor control)** - Available with 12 or 27 voltages only - Refer to TL spec sheet for details **TL3 Two-Level (0/525 w/integrated sensor control)** - Available with 12 or 27 voltages only - Refer to TL spec sheet for details **WB Welded Base Plate** - Standard on P8 mount option, available with P3 and P4 mount - Includes welded base cover **40K 4000K Color Temperature** - Minimum 70 CRI - Color temperature per luminaire

* 347-480V utilizes magnetic step-down transformer. For input power for 347-480V, refer to the Electrical Data table

HOLIDAY INN
ALACHUA
TYPE B

Product Specifications

CONSTRUCTION & MATERIALS

- Durable die-cast aluminum luminaire housing mounts directly to 4" (102mm) diameter pole (included) without visible mounting hardware for clean appearance
- Pole mounts to rugged die cast aluminum internal flange secured by three 3/8"-16x6" anchor bolts with 1-1/4" hook(provided).
  Note: T45 Torx 3/8" socket required for head installation
- Top mounted LEDs for superior optical performance and light control
- Exclusive Colorfast DeltaGuard® finish features an E-Coat epoxy primer with an ultradurable powder topcoat, providing excellent resistance to corrosion, ultraviolet degradation and abrasion. Black, bronze, silver and white are available
- **Weight:** See Dimension and Weight Chart on pages 1 and 4

ELECTRICAL SYSTEM

- **Input Voltage:** 120-277V or 347-480V, 50/60Hz, Class 1 drivers
- **Power Factor:** > 0.9 at full load at 120V
- **Total Harmonic Distortion:** < 20% at full load at 120V
- Integral 10kV surge suppression protection standard
- When code dictates fusing, a slow blow fuse or type C/D breaker should be used to address inrush current

REGULATORY & VOLUNTARY QUALIFICATIONS

- cULus Listed
- Suitable for wet locations
- 10kV surge suppression protection tested in accordance with IEEE/ANSI C62.41.2
- Luminaire and finish endurance tested to withstand 5,000 hours of elevated ambient salt fog conditions as defined in ASTM Standard B 117
- Meets Buy American requirements within ARRA
- RoHS compliant. Consult factory for additional details

Electrical Data* (A)

LED Count (x9)	System Watts 120-277V	System Watts 347-480V	Total Current					
			120V	208V	240V	277V	347V	480V
350mA								
02	22	28	0.18	0.12	0.10	0.10	0.09	0.13
525mA								
02	34	40	0.29	0.19	0.17	0.15	0.12	0.13

* Electrical data at 25°C (77°F). Actual wattage may differ by +/- 10% when operating between 120-480V +/- 10%

Recommended Cree Edge™ Series Lumen Maintenance Factors (LMF)[1]

Ambient	Initial LMF	25K hr Projected[2] LMF	50K hr Projected[2] LMF	75K hr Calculated[3] LMF	100K hr Calculated[3] LMF
5°C (41°F)	1.04	0.99	0.97	0.95	0.93
10°C (50°F)	1.03	0.98	0.96	0.94	0.92
15°C (59°F)	1.02	0.97	0.95	0.93	0.91
20°C (68°F)	1.01	0.96	0.94	0.92	0.90
25°C (77°F)	1.00	0.95	0.93	0.91	0.89

[1] Lumen maintenance values at 25°C are calculated per TM-21 based on LM-80 data and in-situ luminaire testing
[2] In accordance with IESNA TM-21-11, Projected Values represent interpolated value based on time durations that are within six times (6X) the IESNA LM-80-08 total test duration (in hours) for the device under testing ((DUT) i.e. the packaged LED chip)
[3] In accordance with IESNA TM-21-11, Calculated Values represent time durations that exceed six times (6X) the IESNA LM-80-08 total test duration (in hours) for the device under testing ((DUT) i.e. the packaged LED chip)

HOLIDAY INN
ALACHUA
TYPE B

Photometry

All published luminaire photometric testing performed to IESNA LM-79-08 standards by a NVLAP accredited laboratory. To obtain an IES file specific to your project consult: http://lighting.cree.com/products/outdoor/bollards-and-pathway/cree-edge-pathway

2M

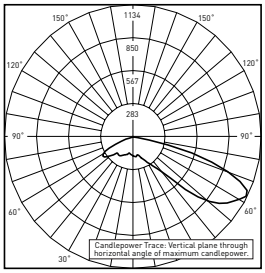

RESTL Test Report #: PL5758-001
PWY-EDG-2M-**-02-E-UL-350-40K
Initial Delivered Lumens: 1,549

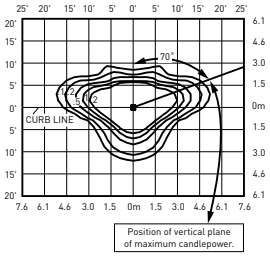

PWY-EDG-2M-**-02-E-UL-350-40K
Mounting Height: 3' (0.9m) A.F.G.
Initial Delivered Lumens: 1,565
Initial FC at grade

Type II Medium Distribution				
LED Count (x9)	4000K		5700K	
	Initial Delivered Lumens*	BUG Ratings** Per TM-15-11	Initial Delivered Lumens*	BUG Ratings** Per TM-15-11
350mA				
02	1,565	B1 U0 G1	1,625	B1 U0 G1
525mA				
02	2,191	B1 U0 G1	2,276	B1 U0 G1

* Initial delivered lumens at 25°C (77°F). Actual production yield may vary between -10 and +10% of initial delivered lumens
** For more information on the IES BUG (Backlight-Uplight-Glare) Rating visit: www.ies.org/PDF/Erratas/TM-15-11BugRatingsAddendum.pdf

3M

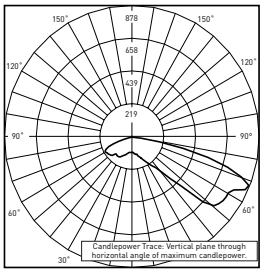

RESTL Test Report #: PL5698-001
PWY-EDG-3M-**-02-E-UL-350-40K
Initial Delivered Lumens: 1,470

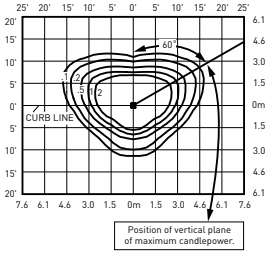

PWY-EDG-3M-**-02-E-UL-350-40K
Mounting Height: 3' (0.9m) A.F.G.
Initial Delivered Lumens: 1,389
Initial FC at grade

Type III Medium Distribution				
LED Count (x9)	4000K		5700K	
	Initial Delivered Lumens*	BUG Ratings** Per TM-15-11	Initial Delivered Lumens*	BUG Ratings** Per TM-15-11
350mA				
02	1,389	B1 U0 G1	1,442	B1 U0 G1
525mA				
02	1,944	B1 U0 G1	2,019	B1 U0 G1

* Initial delivered lumens at 25°C (77°F). Actual production yield may vary between -10 and +10% of initial delivered lumens
** For more information on the IES BUG (Backlight-Uplight-Glare) Rating visit: www.ies.org/PDF/Erratas/TM-15-11BugRatingsAddendum.pdf

5M

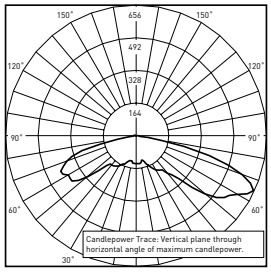

RESTL Test Report #: PL5798-001
PWY-EDG-5M-**-02-E-UL-350-40K
Initial Delivered Lumens: 1,780

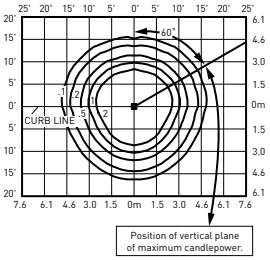

PWY-EDG-5M-**-02-E-UL-350-40K
Mounting Height: 3' (0.9m) A.F.G.
Initial Delivered Lumens: 1,666
Initial FC at grade

Type V Medium Distribution				
LED Count (x9)	4000K		5700K	
	Initial Delivered Lumens*	BUG Ratings** Per TM-15-11	Initial Delivered Lumens*	BUG Ratings** Per TM-15-11
350mA				
02	1,666	B1 U2 G1	1,730	B1 U2 G1
525mA				
02	2,333	B2 U2 G2	2,422	B2 U2 G2

* Initial delivered lumens at 25°C (77°F). Actual production yield may vary between -10 and +10% of initial delivered lumens
** For more information on the IES BUG (Backlight-Uplight-Glare) Rating visit: www.ies.org/PDF/Erratas/TM-15-11BugRatingsAddendum.pdf

HOLIDAY INN
ALACHUA
TYPE B

Photometry

All published luminaire photometric testing performed to IESNA LM-79-08 standards by a NVLAP accredited laboratory. To obtain an IES file specific to your project consult: http://lighting.cree.com/products/outdoor/bollards-and-pathway/cree-edge-pathway

5S

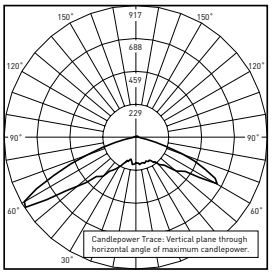

RESTL Test Report #: PL5759-001
PWY-EDG-5S-**-02-E-UL-350-40K
Initial Delivered Lumens: 1,897

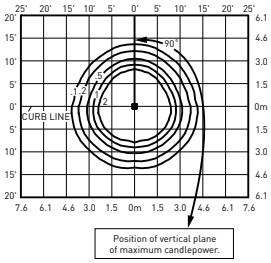

PWY-EDG-5S-**-02-E-UL-350-40K
Mounting Height: 3' (0.9m) A.F.G.
Initial Delivered Lumens: 1,868
Initial FC at grade

Type V Short Distribution				
LED Count (x9)	4000K		5700K	
	Initial Delivered Lumens*	BUG Ratings** Per TM-15-11	Initial Delivered Lumens*	BUG Ratings** Per TM-15-11
350mA				
02	1,868	B1 U2 G1	1,940	B1 U2 G1
525mA				
02	2,615	B1 U2 G1	2,716	B1 U2 G1

* Initial delivered lumens at 25°C (77°F). Actual production yield may vary between -10 and +10% of initial delivered lumens
** For more information on the IES BUG (Backlight-Uplight-Glare) Rating visit: www.ies.org/PDF/Erratas/TM-15-11BugRatingsAddendum.pdf

with Welded Base

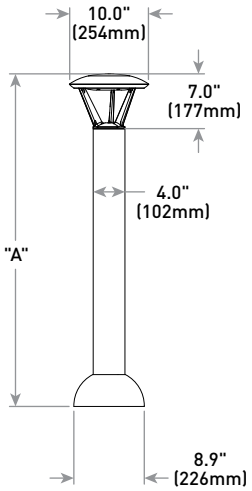

Model	Dim. "A"	Weight*
Pathway (P3)	36" (914mm)	17.9 lbs. (8.1kg)
Pathway (P4)	42" (1068mm)	18.6 lbs. (8.4kg)
Pedestrian (P8)	96" (2438mm)	28.4 lbs (12.9kg)

* Add 4.5 lbs. (2.0kg) for 347-480V

US: lighting.cree.com/lighting T (800) 236-6800 F (262) 504-5415 **Canada: www.cree.com/canada** T (800) 473-1234 F (800) 890-7507

KR Series

KR6™ LED Specification Downlight – Round 6"

HOLIDAY INN
ALACHUA
TYPE C

Product Description

The KR6™ LED specification downlight features Cree TrueWhite® Technology and delivers beautiful, high-quality light with efficacy up to 76 lumens per watt. Designed for new construction applications, the KR Series is available in a variety of color temperatures, round and square trims with high-quality anodized aluminum reflector finishes, a sloped ceiling adaptor accessory, and a variety of dimming options including Cree Sunset Dimming Technology which provides rich, warm light that transitions from 2700K to 1800K as naturally as an incandescent source.

Performance Summary

Utilizes Cree TrueWhite® Technology

Initial Delivered Lumens: 700-5,300 lumens; Delivered lumen output is typical when using a SSGC type reflector

Input Power: 13-87 watts

Emergency Performance: Up to 1,210 Lumens; 10W; Minimum 90 Minutes

CRI: 90

CCT: 2700K, 3000K, 3500K, 4000K, 5000K

Controls: Triac, 0/1-10V; See control availability chart on page 3

Limited Warranty†: 10 years on KR6™ luminaire/1 year on emergency battery pack

† See http://lighting.cree.com/warranty for warranty terms

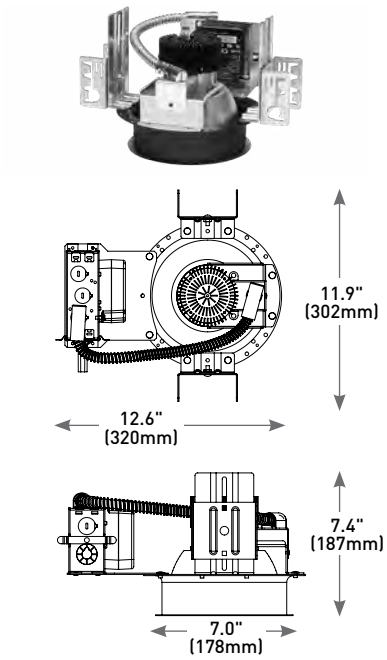

Emergency Backup

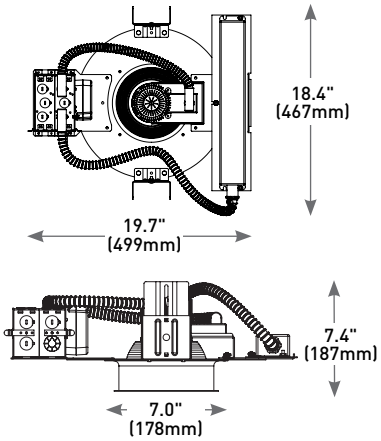

Accessories

Field-Installed		
Sloped Ceiling Adaptor KRKS6**WW ** 0-35 (order in 5 degree increments)	**C-Channel Hanger Bars** RBH30C - Pair of 30" (762mm) rigid 3/4" x 1/2" (19mm x 13mm) C-Channel bars RBH24C-1 - Pair of 24" (610mm) x 1-1/2" (38mm) x 1/2" (13mm) standard C-Channel bars	**T-Bar Clips** RARC7 - Set of four - For use with RBH24C-1 hanger bars **Trim Ring** KR6TA - White

Ordering Information

Fully assembled luminaire is composed of two components that must be ordered separately:
Example: **Housing:** KR6-20L-35K-120V-10V + **Reflector:** KR6T-SSGC-FF

Reflector (Housing must be ordered separately)			
KR6T			
Series	**Reflector Finish**	**Flange Finish**	**Options**
KR6T	**SSGC** Soft Satin Glow, Clear	**FF** Matches Reflector **WF** White Paint	**WW** Wall Wash

Housing (Reflector must be ordered separately)								
KR6								
Series	**Size**	**Reflector**	**Initial Delivered Lumens**	**Optic**	**CCT**	**Voltage**	**Controls**	**Options**
KR	**6** 6 inch	**Blank** Round	**9L** 13W, 700 Lumens – 54 LPW **13L** 18W, 1,100 Lumens – 61 LPW **20L** 30W, 1,700 Lumens – 57 LPW **30L** 39W, 2,550 Lumens – 65 LPW **40L** 44W, 3,350 Lumens – 76 LPW **60L** 87W, 5,300 Lumens – 61 LPW - Available on 120V and 277V only	**Blank** 70° Beam Angle	**27K** - 2700K - 9L thru 40L only **30K** 3000K **35K** 3500K **40K** 4000K **50K** 5000K - Available on 40L and 60L only	**120V** 120 Volts **277V** 277 Volts **347V** 347 Volts	**Blank** - For standard control offering refer to control availability chart on page 3 **10V 0/1-10V Dimming** - Refer to control availability chart on page 3	**WD Sunset Dim** - 9L and 13L @ 27K with Triac Dimming only **EB7 Emergency Backup** - Minimum 90 minutes - 120V, 277V only - Minimum operating temperature: 0°C (32°F)

NOTE: Price adder may apply depending on configuration

HOLIDAY INN
ALACHUA
TYPE C

Product Specifications

CREE TRUEWHITE® TECHNOLOGY

A revolutionary way to generate high-quality white light, Cree TrueWhite® Technology is a patented approach that delivers an exclusive combination of 90+ CRI, beautiful light characteristics, and lifelong color consistency, all while maintaining high luminous efficacy – a true no compromise solution.

CONSTRUCTION & MATERIAL

- Low brightness parabolic spun Alzak aluminum cone, 0.06" (2mm) thick with polished radius and continuous self-flange
- Soft Satin Glow Clear finish, standard
- 2" (51mm) aperture throat to accommodate all standard and up to 3" (76mm) thick ceilings and provide flexibility in mounting within grid
- Provided with quick mounting brackets for optional carrying channels
- Light engine, optics, and driver accessible from below ceiling

ELECTRICAL SYSTEM

- **Power Factor:** > 0.9 for 120V and 277V
- **Total Harmonic Distortion:** < 20% at full load
- **Input Power:** 120, 277V, or 347V, 50/60Hz
- **Operating Temperature Range:** -18˚C - +40˚C (0˚F - +104˚F); minimum operating temperature with EB7 option is 0°C (32°F)
- **10V Source Current:** 9L & 12L: 0.15mA; 20L-40L: 2.2mA; 60L: 0.11mA

CONTROLS

- For standard control offering refer to control availability chart on page 3
- For use with Class 2 dimming systems only. Reference http://lighting.cree.com/products/indoor/new-construction-downlights/kr-series for recommended dimming controls and wiring diagrams

REGULATORY & VOLUNTARY QUALIFICATIONS

- cULus Listed
- Suitable for thru-wiring 8#12AWG-90˚C
- Suitable for damp locations
- Designed for indoor use
- Thermally protected Type NON-IC in accordance with Article 410 of the NEC and UL 1598
- Meets FCC Part 15, Subpart B, Class A standards for conducted and radiated emissions
- EnergyStar® certified. Please refer to https://www.energystar.gov/productfinder/product/certified-light-fixtures/results for most current information
- RoHS compliant. Consult factory for additional details

Recommended KR Series Lumen Maintenance Factors (LMF)[1]

Ambient	Initial Delivered Lumens	Initial LMF	25K hr Projected[2] LMF	50K hr Projected[2] LMF	75K hr Calculated[3] LMF	100K hr Calculated[3] LMF
5˚C (41˚F)	9L and 13L	1.05	1.04	1.03	1.03	1.02
	20L and 30L	1.03	0.99	0.94	0.90	0.86
	40L and 60L	1.03	0.96	0.90	0.83	0.77
10˚C (50˚F)	9L and 13L	1.04	1.03	1.03	1.02	1.02
	20L and 30L	1.02	0.97	0.93	0.89	0.85
	40L and 60L	1.03	0.95	0.88	0.82	0.76
15˚C (59˚F)	9L and 13L	1.03	1.02	1.02	1.01	1.01
	20L and 30L	1.01	0.96	0.91	0.88	0.84
	40L and 60L	1.02	0.94	0.87	0.81	0.75
20˚C (68˚F)	9L and 13L	1.02	1.01	1.00	1.00	0.99
	20L and 30L	1.01	0.95	0.90	0.87	0.83
	40L and 60L	1.01	0.93	0.86	0.80	0.74
25˚C (77˚F)	9L and 13L	1.00	1.00	0.99	0.99	0.99
	20L and 30L	1.00	0.94	0.89	0.86	0.82
	40L and 60L	1.00	0.92	0.85	0.79	0.74
30˚C (86˚F)	9L and 13L	0.99	0.99	0.98	0.98	0.98
	20L and 30L	0.97	0.93	0.88	0.85	0.81
	40L and 60L	0.98	0.91	0.84	0.78	0.73
35˚C (95˚F)	9L and 13L	0.98	0.97	0.97	0.97	0.97
	20L and 30L	0.96	0.92	0.87	0.84	0.80
	40L and 60L	0.96	0.90	0.83	0.77	0.72
40˚C (104˚F)	9L and 13L	0.97	0.96	0.96	0.96	0.95
	20L and 30L	0.95	0.90	0.86	0.83	0.79
	40L and 60L	0.95	0.88	0.82	0.76	0.71

[1] Lumen maintenance values at 25˚C (77˚F) are calculated per TM-21 based on LM-80 data and in-situ luminaire testing
[2] In accordance with IESNA TM-21-11, Projected Values represent interpolated value based on time durations that are within six times (6X) the IESNA LM-80-08 total test duration (in hours) for the device under testing ((DUT) i.e. the packaged LED chip)
[3] In accordance with IESNA TM-21-11, Calculated Values represent time durations that exceed six times (6X) the IESNA LM-80-08 total test duration (in hours) for the device under testing ((DUT) i.e. the packaged LED chip)

Installation

- Recommended ceiling cutout 6.5" (165mm)

Note: 30L and 40L versions require marked spacing: 24" (600mm) x 12" (300mm) x ½" (12mm). 24" (600mm) luminaire to luminaire, 12" (300mm) luminaire to side wall, ½" (12mm) above luminaire

60L versions require marked spacing: 48" (1219mm) x 24" (600mm) x 1" (25mm). 48" (1219mm) luminaire to luminaire, 24" (600mm) luminaire to side wall, 1" (25mm) above luminaire

HOLIDAY INN
ALACHUA
TYPE C

Photometry

KR6-30L-27K-120V W/KR6T-SSGC-FF BASED ON UL REPORT TEST #: 157473
Luminaire photometry has been conducted in accordance with IESNA LM-79-08. IESNA LM-79-08 specifies the entire luminaire as the source resulting in a luminaire efficiency of 100%.

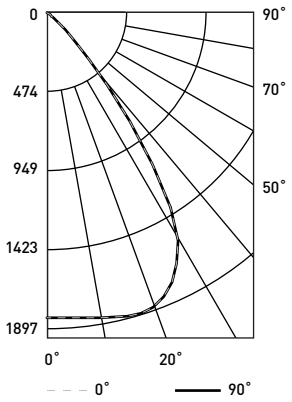

UL Test Report #: 157473
KR6-30L-27K-120V w/KR6T-SSGC-FF
Initial Delivered Lumens: 2,479
Efficacy: 66 LPW
S/M: 1.2

Coefficients Of Utilization – Zonal Cavity Method				
RC %:	80			
RW %:	70	50	30	10
RCR: 0	119	119	119	119
1	113	110	108	105
2	107	102	97	94
3	101	94	89	84
4	95	87	81	77
5	90	81	75	70
6	85	75	69	64
7	80	70	64	59
8	76	66	59	55
9	72	61	55	51
10	68	58	51	47

Effective Floor Cavity Reflectance: 20%

Average Luminance Table (cd/m²)				
	Horizontal Angle			
Vertical Angle	0°	45°	90°	
45°	19,317	19,317	19,317	
55°	4,459	4,459	4,459	
65°	2,074	2,074	2,074	
75°	931	931	931	
85°	0	0	0	

Zonal Lumen Summary			
Zone	Lumens	% Lamp	Luminaire
0-30	1,527	N/A	61.5%
0-40	2,206	N/A	88.8%
0-60	2,462	N/A	99.1%
0-90	2,483	N/A	100.0%
0-180	2,483	N/A	100.0%

Cone of Light		
Distance from Workplane	Footcandles	Beam Diameter
6' (1.8m)	51	7.3' (2.2m)
8' (2.4m)	29	9.7' (3.0m)
10' (3.0m)	18	12.3' (3.7m)
12' (3.7m)	13	14.5' (4.4m)
14' (4.3m)	9	17.4' (5.3m)

Reference http://lighting.cree.com/products/indoor/new-construction-downlights/kr-series for detailed photometric data

Application Reference

Based on KR6-30L-27K-120V W/KR6T-SSGC-FF Luminaire

Open Space					
Spacing	Lumens	Wattage	LPW	w/ft²	Average FC
4 x 4	2,550	39	65	2.34	155
6 x 6				1.09	74
8 x 8				0.59	42
10 x 10				0.39	27

10' Ceiling, 80/50/20 Reflectances, 2.5' workplane. LLF: 1.0 Initial. Open Space: 50' x 40' x 10'

Corridor					
Spacing	Lumens	Wattage	LPW	w/ft²	Average FC
4' on Center	2,550	39	65	1.63	77
6' on Center				1.11	52
8' on Center				0.78	37
10' on Center				0.65	31

10' Ceiling, 80/20/50 Reflectances, Light levels on the ground. LLF: 1.0 Initial. Corridor: 6' Wide x 100' Long

Control Availability Chart

Initial Delivered Lumens	Non Dimming			Triac Dimming to 5%			0/1-10V Dimming to 10%		
	120V	277V	347V	120V	277V	347V	120V	277V	347V
9L	N/A	S	N/A	S	N/A	N/A	O	O	O
13L	N/A	S	N/A	S	N/A	N/A	O	O	O
20L	N/A	N/A	N/A	N/A	N/A	N/A	S	S	S
30L	N/A	N/A	N/A	N/A	N/A	N/A	S	S	S
40L	N/A	N/A	N/A	N/A	N/A	N/A	S	S	S
60L	N/A	N/A	N/A	N/A	N/A	N/A	S	S	N/A

S = Standard Offering
O = Optional Offering

US: lighting.cree.com/lighting T (800) 236-6800 F (262) 504-5415 **Canada: www.cree.com/canada** T (800) 473-1234 F (800) 890-7507

engineers • surveyors • planners

40 years

Worksheet for Commercial Water Meter Sizing

Project Name : Holiday Inn - Alachua

Customer / Builder Name : MPH Hotels

Property Address : 16139 NW US HWY 441 Alachua, FL 32615

Type	Requirement Per GRU/64E-6 (GPD)	Number of Rooms	Total (GPD)
Hotel	100.00	92	9,200
TOTAL DEMAND			9,200
Peaking Factor			2.5
Operating Period (hrs)			18
Peak Demand			**21 gpm**
TOTAL DEMAND			**21 gpm**
NEEDED WATER METER SIZE*			**2" Water Meter**

SERGIO J. REYES
LICENSE
No 47311
STATE OF FLORIDA
PROFESSIONAL ENGINEER
10/25/16

NFPA - FIRE FLOW CALCULATION

I. PROJECT NAME

Holiday Inn Alachua
Alachua, Florida

II. PROJECT LOCATION

County: Alachua

Township: **8 S** *Range:* **18 E**

General Location: 16139 NW US HWY 441
Alachua, Florida

II. Subject Building

Construction Class	**Type III (200)**
Building Type	**Buildings other than One and Two-Family Dwellings**
First Floor Building Area	**13,600**
Number of Stories	**4**
Fire Sprinklers Available?	**Yes**
Fire Sprinkler Type	**Automatic Sprinkler System**
Fire Sprinker Reduction	**75%**
Minimum Building Separation	**N/A**
Building Separation Reduction	**0%**
Minimum Fire Flow Required	**1000**
Fire Flow Area Required	**more than 5000 sf**

Minimum Required Fire Flow and Flow Duration for Building
per NFPA 1 - 2009 EditionTable 18.4.5.1.2

Construction Class	Fire Flow Area (sf)	Fire Flow (GPM)	Flow Duration (HR)	Required Flow (GPM)
Type III (200)	53,389.00	5,000.00	4.00	**1,250***

***600 GPM required based on NFPA 18.4.5.2.2 and attached letter.**

SERGIO J. REYES
LICENSE
No 47311
STATE OF FLORIDA
PROFESSIONAL ENGINEER

III. Fire Flow Requirements

18.4.5.1 **One and Two-Family Dwellings.**

18.4.5.1.1 The minimum fire flow and flow duration requirements for One and Two-Family Dwellings having a fire flow area that does not exceed 5,000 sf shall be 1,000 GPM for 1 hour.

18.4.5.1.1.1 A reduction in required fire flow of 50% shall be permitted when the building is provided with an approved automatic sprinkler system.

18.4.5.1.1.2 A reduction in required fire flow of 25% shall be permitted when the building is separated from other buildings by a minimum of 30 ft

18.4.5.1.1.3 A reduction in 18.4.5.1.1.1 & 18.4.5.1.1.2 shall not reduce the required fire flow to less

18.4.5.1.2 Fire flow and flow duration for dwellings having a fire flow area in excess of 5,000 sf shall not be less than that specified in Table 18.4.5.1.2

18.4.5.1.2.1 A reduction in required fire flow of 50% shall be permitted when the building is provided with an approved sprinkler system.

18.4.5.2 **Buildings other than One and Two-Family Dwellings.**
The minimum fire flow and flow duration for buildings other than One and Two-Family Dwellings shall be as specified in Table 18.4.5.1.2

18.4.5.2.1 A reduction in required fire flow of 75% shall be permitted when the building is protected throughout by an approved automatic sprinkler system. The resulting fire flow shall not be less than 1000 GPM

18.4.5.2.2 A reduction in required fire flow of 75% shall be permitted when the building is protected throughout by an approved automatic sprinkler system, which utilizes quick response sprinklers throughout. The resulting fire flow shall not be less than 600 GPM.

JOINT APPLICATION FOR INDIVIDUAL ENVIRONMENTAL RESOURCE PERMIT/ AUTHORIZATION TO USE STATE-OWNED SUBMERGED LANDS/ FEDERAL DREDGE AND FILL PERMIT

FLORIDA DEPARTMENT OF ENVIRONMENTAL PROTECTION/
WATER MANAGEMENT DISTRICTS/
U.S. ARMY CORPS OF ENGINEERS

Effective October 1, 2013

INSTRUCTIONS FOR USE OF THIS FORM:

This form is designed to assist you in submitting a complete application. All applications must include Section A- General Information for All Activities. Sections B through H list typical information that is needed based on the proposed activities, and are only required as applicable. Part 1-C of Section A will guide you to the correct sections needed based on your proposed activities. Applicants are advised to consult Chapter 62-330, F.A.C., and the Environmental Resource Permit Applicant's Handbook Volumes I and II for information regarding the ERP permitting process and requirements while preparing their application. Internet addresses for Chapter 62-330, F.A.C. and the Applicant's Handbook, Agency contact information, and additional instructions for this form can be found in Attachment 1.

What Sections of the Application Must I Fill Out?

Does the project involve….	Section							
	A- General Information	B- Single Family Projects	C- Wetlands and other Surface Waters	D- Structures or Works in Surface Waters	E- Stormwater Management System	F- State-owned Submerged Lands	G- Mitigation Banks	H- Mines
Fill in wetlands or waters for a single family residence?	X	X						
Docks, shoreline stabilization, seawalls associated with a single family residence?	X	X				X, if applicable		
Wetland impacts (other than associated with an individual residence)?	X		X					
Boating facilities, a marina, jetty, reef, or dredging?	X		X	X		X if applicable		
Any work on state owned submerged land?	X		X			X		
Construction of a stormwater management system?	X		X, if applicable		X			
Constructing a mitigation bank?	X		X		X, if applicable		X	
Creating a mine?	X		X, if applicable					X

Note- if you are required to provide Section B, then you do not have to provide any other Sections, unless the activities are on state-owned submerged lands. In that case, Section F will also be required.

If you have any questions, or would like assistance completing this form, please contact the staff of the nearest office of either the Florida Department of Environmental Protection (DEP) or a Water Management District (WMD) (see Attachment 2).

Section A: General Information for All Activities

PART 1: NAME, APPLICATION TYPE, LOCATION, AND DESCRIPTION OF ACTIVITY

A. Name of project, including phase if applicable: **Holiday Inn Alachua**

B. This is for (check all that apply):

☒ Construction or operation of ***new*** works, activities and/ or a stormwater management system

☐ ***Conceptual Approval*** of proposed works, activities and/ or a stormwater management system

☐ Modification or Alteration of ***existing*** works activities and / or a stormwater management system. Provide the existing DEP or WMD permit #, if known: _____ Note: Minor modifications do not require completion of this form, and may instead be requested by letter.

☐ ***Maintenance or repair*** of works, activities and/ or stormwater management system previously permitted by the DEP or WMD Provide existing permit #, if known: _____

☐ Abandonment or removal of works, activities and/ or stormwater management system Provide existing DEP or WMD permit #, if known: _____

☐ Operation of an ***existing unpermitted*** stormwater management system.

☐ Construction of additional phases of a permitted work, activity and/ or stormwater management system.

Provide the existing DEP or WMD permit #, if known: _____

C. ***List the type of activities proposed. Check all that apply, and provide the supplemental information requested in each of the referenced application sections.*** *Please also reference Applicant's Handbooks I and II for the type of information that may be needed.*

☐ Activities associated with one single-family residence, duplex, triplex, or quadruplex that do not qualify for an exemption or a Noticed General Permit: ***Provide the information requested in Section B. Do not complete Section C.***

☐ Activities within wetlands or surface waters, or within 25 feet of a wetland or surface water, (not including the activities associated with an individual residence). *Examples include dredging, filling, outfall structures, docks, piers, over-water structures, shoreline stabilization, mitigation, reclamation, restoration/ enhancement.* ***Provide the information requested in Section C.***

☐ Activities within navigable or flowing surface waters such as a multi-slip dock or marina, dry storage facility, dredging, bridge, breakwaters, reefs, or other offshore structures: ***In addition to Section C, also provide the information requested in Section D.***

☐ Activities that are (or may be) located within, on or over state-owned submerged lands (*See Chapter 18-21, F.A.C. https://www.flrules.org/gateway/ChapterHome.asp?Chapter=18-21*): ***In addition to Section B or C, also provide the information requested in Section F***

☒ Construction or alteration of a stormwater management system serving residential, commercial, transportation, industrial, agricultural, or other land uses, or a solid waste facility (excluding mines that are regulated by DEP). ***Provide the information requested in Section E.***

☐ Creation or modification of Mitigation Bank (refer to Chapter 62-342, F.A.C. https://www.flrules.org/gateway/ChapterHome.asp?Chapter=62-342): ***Provide the information requested in Section G.***

☐ Mines (as defined by in Section 2.0 of Applicant's Handbook Volume I) that are regulated by the DEP: ***Provide the information requested in Section H.***

☐ Other, describe: _____ Please contact the Agency to determine which additional sections of the application are needed. See Attachment 1 for Agency contacts.

D. Describe in general terms the proposed project, system, works, or other activities. For permit modifications, please briefly describe the changes requested to the permit: **The construction of a 92 room hotel with associated paving, stormwater, and utility improvements. The proposed stormwater system is a dry detention basin handling 1.65 acres of impervious area.**

E. For activities in, on, or over wetlands or other surface waters, check the type of federal dredge and fill permit requested (if known): ☐Individual ☐Programmatic General permit #: SAJ

☐General ☐Nationwide permit #:NWP ☒Not Applicable ☐ Not sure

F. Project/Activity Street/Road Address or other location (if applicable): **16139 NW US HWY 441**

G.

City: **Alachua** County(ies)**Alachua** Zip: **32615**

Note: For utility, road, or ditch/canal activities, provide a starting and ending point using street names and nearest house numbers or provide length of project in miles along named streets or highways.

H. Project location map and Section, Township, and Range information (use additional sheets if needed): ***Please attach a location map showing the location and boundaries of the proposed activity in relation to major intersections or other landmarks. The map should also contain a north arrow and a graphic scale; show Section(s), Township(s), and Range(s); and must be of sufficient detail to allow a person unfamiliar with the site to find it.***
Land Grant name, if applicable:

Section(s): 9 Township: 8S Range: 18E

H. Latitude (DMS) Longitude (DMS) (Taken from central location of the activity). Explain source for obtaining latitude and longitude (i.e. U.S.G.S. Quadrangle Map, GPS, online resource):

I. Tax Parcel Identification Number(s): **03053-001-001**

[Number may be obtained from property tax bill or from the county property appraiser's office; if on multiple parcels, provide multiple Tax Parcel Identification Numbers]

J. Directions to Site (from major roads; include distances and landmarks as applicable):

K. Project area or phase area: **4.25** acres

L. Name of waterbody(ies) (if known) in which activities will occur or into which the system will discharge:

Receiving Waterbody	Class Type	Outstanding Florida Water	Aquatic Preserve

The following questions (M-O) are not applicable to activities related to a single-family residence, including private single-family residential docks, piers, seawalls or boat ramps.

M. Is it part of a larger plan of development or sale? ☒ yes ☐ no

N. Impervious or semi-impervious area excluding wetlands and other surface waters (if applicable): **1.65** acres or square feet

O. Volume of water the system is capable of impounding (if applicable): **2.781** acre- feet.

PART 2: SUPPLEMENTAL INFORMATION, AND PERMIT HISTORY

A. Is this an application to modify an existing Environmental Resource Permit, or to construct or implement part of a multi-phase project, such as a project with a Conceptual Approval permit? ☐ Yes ☒ No *If you answered "yes", please provide permit numbers below:*

AGENCY	DATE	PERMIT/ APPLICATION NO.	PROJECT NAME

B. Indicate if there have been any ***pre-application meeting(s)*** or other discussions about the proposed project, system or activity. If so, please provide the date(s), location(s) of the meeting, and the name(s) of Agency staff that attended the meeting(s):

AGENCY	DATE	LOCATION	MEETING ATTENDEES

C. ***Attach a depiction (plan and section views), which clearly shows the works or other activities proposed to be constructed.*** Use multiple sheets, if necessary, a scale sufficient to show the location and type of works, and include a north arrow and a key to any symbols used. ***Specific information to be included in the plans is based on the activities proposed and is further described in Sections B-H***. However, supplemental information may be required based on the specific circumstances or location of the proposed works or other activities.

D. Processing Fee: ***Please submit the application processing fee along with this application form and supplemental information*****.** Processing fees vary based on the size of the activity, the type of permit

applied for, and the reviewing Agency. Please reference Attachment 3 to determine the appropriate fee.

PART 3: APPLICANT AND ASSOCIATED PARTIES INFORMATION

Instructions: Permits are only issued to entities having sufficient real property interest as described in Section 4.2.3 (d) of Applicant's Handbook Volume I. Please attach evidence of sufficient real property interest over the land upon which the activities subject to the application will be conducted, including mitigation (if applicable). Refer to Section 4.2.3 (d)for acceptable ownership or real property interest documentation. For corporations, list a person who is a registered agent or officer of the corporation who has the legal authority to bind the corporation.

A. APPLICANT (ENTITY MUST HAVE SUFFICIENT REAL PROPERTY INTEREST) ☐ **THIS IS A CONTACT PERSON FOR ADDITIONAL INFORMATION**		
Name: Last: **Gibbons**	First: **Randy**	Middle:
Title:	Company: **MPH Hotels, Inc.**	
Address: **100 2nd Avenue South, Ste. 1103-S**		
City: **St. Petersburg**	State: **FL**	Zip: **33701**
Home Telephone: **(727)914-8885**	Work Telephone:	
Cell Phone:	Fax:	
E-mail Address: **rgibbons@mphhotels.com**		
Correspondence will be sent via email. Check here to receive correspondence via US Mail: ☐		
B. LAND OWNER(S) (IF DIFFERENT OR IN ADDITION TO APPLICANT) ☐ **CHECK HERE IF LAND OWNER IS ALSO A CO-APPLICANT**		
Name: Last: **Johns**	First: **Virginia**	Middle:
Title:	Company: **HIPP Investments, LLC**	
Address: **14610 NW 129th Terrace**		
City: **Alachua**	State: **FL**	Zip: **32615**
Home Telephone:	Work Telephone:	
Cell Phone:	Fax:	
E-mail Address: **vj@jchipp.com**		
Correspondence will be sent via email. Check here to receive correspondence via US Mail: ☐		

C. OPERATION AND MAINTENANCE ENTITY **(see Applicant's Handbook I, Section 12.3)**			
Entity Name:	Contact: Last: **Gibbons**	First: **Randy**	Middle:
Title:	Company: **MPH Hotels, Inc.**		
Address: **100 2nd Avenue South, Ste. 1103-S**			
City: **St. Petersburg**	State: **FL**		Zip: **33701**
Home Telephone: **(727)914-8885**	Work Telephone:		
Cell Phone:	Fax:		
E-mail Address: **rgibbons@mphhotels.com**			
Correspondence will be sent via email. Check here to receive correspondence via US Mail: ☐			

D. CO-APPLICANT (IF DIFFERENT OR IN ADDITION TO APPLICANT AND OWNER)		
Name: Last:	First:	Middle:
Title:	Company:	
Address:		
City:	State:	Zip:
Home Telephone:	Work Telephone:	
Cell Phone:	Fax:	
E-mail Address:		
Correspondence will be sent via email. Check here to receive correspondence via US Mail: ☐		

E. ENGINEERING CONSULTANT ☒ THIS IS A CONTACT PERSON FOR ADDITIONAL INFORMATION		
Name: Last: **Reyes**	First: **Sergio**	Middle:
Title: **President**	Company: **eda engineers - surveyors - planners, inc.**	
Address: **2404 NW 43rd St**		
City: **Gainesville**	State: **FL**	Zip: **32606**
Home Telephone:	Work Telephone: **352-373-3541**	
Cell Phone:	Fax:	
E-mail Address: **sreyes@edafl.com**		
Correspondence will be sent via email. Check here to receive correspondence via US Mail: ☐		

F. ENVIRONMENTAL CONSULTANT ☐ THIS IS A CONTACT PERSON FOR ADDITIONAL INFORMATION		
Name: Last:	First:	Middle:
Title:	Company:	
Address:		
City:	State:	Zip:
Home Telephone:	Work Telephone:	
Cell Phone:	Fax:	
E-mail Address:		
Correspondence will be sent via email. Check here to receive correspondence via US Mail: ☐		

G. AGENT AUTHORIZED TO SECURE PERMIT (IF DIFFERENT FROM CONSULTANT) ☐ THIS IS A CONTACT PERSON FOR ADDITIONAL INFORMATION		
Name: Last:	First:	Middle:
Title:	Company:	
Address:		
City:	State:	Zip:
Home Telephone:	Work Telephone:	
Cell Phone:	Fax:	
E-mail Address:		
Correspondence will be sent via email. Check here to receive correspondence via US Mail: ☐		

If necessary, please add additional pages for other contacts and property owners related to this project.

Additional Addresses

Applicant	,

Land Owner	,

Operation and Maintenance Entity	,

Engineering Consultant	,

Environmental Consultant	,

Agent	,

Compliance Entity	,

Consultant	,

DRAINAGE DESIGN NOTES

Prepared for

Holiday Inn Alachua

I hereby certify that the design of the stormwater management system for the project known as Holiday Inn Alachua meets all of the requirements and has been designed substantially in accordance with the Suwannee River Water Management District Design Criteria.

Professional Engineer of Record:

SERGIO J. REYES
LICENSE
No 47311
STATE OF FLORIDA
PROFESSIONAL ENGINEER

9/10

Sergio J. Reyes, PE
Cert. No. 47311

engineers • surveyors • planners, inc.

DRAINAGE DESIGN NOTES
HOLIDAY INN - ALACHUA

16139 NW US HWY 441

Engineer of Record:
Sergio J. Reyes, P.E.
Cert No. 47311

Engineer Intern:
Meagan Dickey, E.I.

Submitted to:

City of Alchua

Submitted: Sep 29, 2016

Resubmitted: Dec 5, 2016

Prepaired By:
eda engineers surveyors planners, inc.
2404 NW 43rd St
Gainesville, FL 32608

Table of Contents

Drainage Design Notes

Attachment A	Soil Borings
Attachment B	Pre and Post-Development Drainage Map
Attachment C	Pre and Post-Development Conditions PONDS 3.2 Model
Attachment D	Recovery Analysis for WQTV in 72 hrs, 1/2 Volume in 7 days, and Full Volume in 30 days PONDS Model
Attachment E	Soils Map
Attachment F	Pipe Sizing

DRAINAGE DESIGN NOTES

PROJECT NAME: **Holiday Inn - Alachua**
Alachua, FL

PROJECT LOCATION:

County: Alachua
Sections: *9* *Township:* *8 S* *Range:* *18 E*
General Location: 16139 NW US HWY 441
Alachua, FL

GENERAL PROJECT INFORMATION

The construction of a 92 room hotel. The proposed development includes paving, grading, utility, and stormwater management improvements.

A. DRAINAGE AND DESIGN CRITERIA

1. *Suwannee River Water Management District (SRWMD)* — Meet requirements of 40C-42.

2. *City of Alachua Land Development Code* — City of Alachua Land Development Code (Article 6.9.3)

B. SITE SOILS INFORMATION

GSE conducted a subsurface investigation on the site and summarized their findings in the report No. 12872, dated September 19, 2016. A copy of the report is provided in Attachment A.

C. EXISTING SITE CONDITIONS

The existing site contains primarily Type B and D soils with no existing impervious area. The topography of the site ranges from and elevation of 132 to 95.

D. DRAINAGE DESCRIPTION

1. Pre-development Conditions

In pre-development conditions, Drainage Area One is collected by an existing pipe system along the west side of NW 167th Blvd that conveys the runoff to an existing sink near US 441 and Drainage Area Two discharges to the southeast.

2. Post-development Conditions

a) The proposed project consists of one drainage area, which is conveyed to a proposed dry detention basin that will discharge to the southeast as in predevelopment conditions.

b) The discharge rate and volume is controlled to be below pre-development conditions of Pre-Development Drainage Area Two. 1 foot or more of freeboard is provided for the dry detention

E. DRAINAGE DESIGN

1. DRAINAGE AREA

Pre-Development Drainage

Drainage Area One Collected by Ex. Storm System	Area (sf)	Area (Acres)	Curve CN
Existing Impervious	0	0.00	98.0
Open 'D' Soils - Good Condition	6,550	0.15	80.0
Open 'B' Soils - Good Condition	15,283	0.35	61.0
TOTALS	**21,833**	**0.50**	**66.7**

Drainage Area Two Runoff to Southeast	Area (sf)	Area (Acres)	Curve CN
Existing Impervious	0	0.00	98.0
Open 'D' Soils - Fair Condition	63,419	1.46	80.0
Open 'B' Soils - Fair Condition	42,279	0.97	61.0
TOTALS	**105,698**	**2.43**	**72.4**

Post-Development Drainage

Drainage Area One Outfall to Southeast	Area (sf)	Area (Acres)	Curve CN	Runoff Coefficient	DCIA %
Impervious	72,541	1.67	98.0	0.95	
Basin	26,063	0.60	100.0	0.20	
Open	28,924	0.66	71.4	0.20	
TOTALS	**127,528**	**2.93**	**92.4**	**0.63**	**57%**

2. BASIN STORAGE DATA

Dry Detention Basin

Stage (MSL)	Area (SF)	Area (ac)	Volume (CF)	Vol. V1 (AC-FT)
102.00	11735.55	0.269	0	0
103.00	14396.05	0.330	13,066	0.300
103.02	14451.34	0.332	13,354	0.307
104.00	17160.78	0.394	28,844	0.662
105.00	20027.66	0.460	47,438	1.089
106.00	22995.16	0.528	68,950	1.583
107.00	26062.89	0.598	93,479	2.146
108.00	29230.90	0.671	121,126	2.781

3. WATER QUALITY TREATMENT VOLUME

The basin will provide water quality treatment volume per SRWMD and City of Alachua critera.

SRWMD Requirement: The minimum stormwater treatment volume shall be the runoff from the first 2.0 inches of rainfall from the design storm

City of Alachua Requirement: The first one-half inch of stormwater runoff shall be treated in an off line retention system or according to other best management practices as described in the SRWMD's Surface Water Management Permitting Manual, as amended

	SRWMD Volume (cf)	CoA Volume (cf)	Treatment Required (cf)	Treat. Vol Provided
Proposed Basin	13,319	5,314	13,319	13,354

4. BASIN GEOMETRY & DETAILS

Basin Perimeter	804.5
Equivalent basin width (ft)	57.0
Equivalent basin length (ft)	345.3
Average unsaturated area (sf)	11,736

5. SUBSURFACE INVESTIGATION INFORMATION

Based on the Soils Report No. 12872 revised by GSE on September 19, 2016, the recommendations of the soil characteristics are summarized below:

Report No. 12872	
Soil Boring	P1-P4
Depth Confined layer (ft)	98.00
Depth of SHWT (ft)	98.00
Veritcal (ft/d)	15.00
Horizontal (ft/d)	20.00
Fillable porosity (%)	25.00

The soil perameters above can only be obtained if the basin is undercut by 4 feet. The outfall structure will have an invert below the undercut bottom elevation and a rectangular orifice coverred by filter fabric, in order to discharge the water quality treatment volume from the undercut area below the basin.

6. STAGE-STORAGE DISCHARGE INFORMATION

The dry detention system will have the following structures for discharge and recovery. The WQTV recovery time was analyzed using PONDS 3.2 Slug Load. In order to analyze the recovery for half of the inflow volume in seven days and the full inflow volume in thirty days, PONDS 3.2 detailed results can be seen in Attachment D and a summary below:

Discharge Structure

Rectangular Weir:		
	Elevation	106.75
	Length (ft)	2.50
Rectangular Orifice (To Discharge WQTV):		
	Elevation	98.00
	Size (in)	24.00" x 48.00"

Recovery

WQTV Treatm. Vol (cf)	13,319
Time (hrs)	6.00

One Half of Volume within Seven Days Recovery

Storm Event	1/2 Stage (elevation)	Recovery (days)
100yr-1hr	103.20	1.21
100yr-2hr	103.43	2.29
100yr-4hr	103.77	3.04
100yr-8hr	104.05	3.83
100yr-24hr	104.58	4.88
100yr-3d	104.86	4.58
100yr-7d	104.92	5.00
100yr-10d	104.86	5.00

Total Volume within Thirty Days Recovery

Storm Event	Recovery Stage (elevation)	Recovery (days)	Back to Back Required	Back to Back Stage
100yr-1hr	102.00	8.33	N/A	N/A
100yr-2hr	102.00	12.29	N/A	N/A
100yr-4hr	102.00	18.75	N/A	N/A
100yr-8hr	102.00	25.38	N/A	N/A
100yr-24hr	102.00	Back to Back	Yes (102.33)	106.54
100yr-3d	102.00	Back to Back	Yes (102.58)	106.92
100yr-7d	102.00	Back to Back	Yes (102.85)	107.00
100yr-10d	102.00	Back to Back	Yes (102.86)	106.93

Based on results, there will be no flooding during back to back storms.

7. STORM ROUTING RESULTS

The computer program PONDS 3.2 was used to route the design storms through the proposed detention systems, as well as the pre-development conditions. The 100-yr critical storms were analyzed as required by SRWMD. The input data and storm routing results can be seen in the Attachment C.

Storm	Basin 1	Rates		Volume	
Event	Stage	Pre (cfs)	Post (cfs)	Pre (ac-ft)	Post (ac-ft)
100 yr-1 hr	104.18	7.50	0.00	0.36	0.00
100 yr-2 hr	104.58	6.80	0.00	0.52	0.00
100 yr-4 hr	105.11	5.22	0.00	0.74	0.00
100 yr-8 hr	105.53	6.05	0.00	0.96	0.00
100 yr-24 hr	106.40	2.18	0.00	1.52	0.00
100 yr-72 hr	106.83	1.56	0.17	2.05	0.09
100 yr-168 hr	106.92	1.10	0.54	2.48	0.26
100 yr-240 hr	106.83	1.45	0.17	2.87	0.28
WQTV	103.02	0.00	0.00	0.00	0.00

Holiday Inn Alachua

Pre Development DA 1

Time of Concentration

Overall Flow Length (ft)	420.0
Initial Elevation	132.00
Final Elevation	111.00

Sheet Flow

L = Flow Length (ft)		300.0
n = Mannings Roughness Coefficient		Grass
	n =	0.180
S = slope of hydraulic grade line (ft/ft)		0.057
P2 = 2 year, 24 hour rainfall (in.)		4.8

$$T = \frac{0.007(nL)^{0.8}}{(P_2)^{0.5}\, s^{0.4}}$$

Tc = 0.24 hr

Tc = 14.70 min

Shallow Concentrated Flow

L= Length of Shallow Concentrated Flow (ft)	120.0	Unpaved
	0.0	Paved
Unpaved Velocity (ft/s)	2.95	
Paved Velocity (ft/s)	NA	
S = Slope of Hydraulic Grade Line (ft/ft)	0.033	

$$T_{unpaved} = \frac{L}{16.1345 \times S^{0.5}}$$

Tc = 0.68 min

$$T_{paved} = \frac{L}{20.3282 \times S^{0.5}}$$

Tc = 0 min

Total Time of Concentration 15.38 min

Holiday Inn Alachua

Pre Development DA 2

Time of Concentration

Overall Flow Length (ft)	629.0
Initial Elevation	132.00
Final Elevation	96.00

Sheet Flow

L = Flow Length (ft)		300.0
n = Mannings Roughness Coefficient		Grass
	n =	0.180
S = slope of hydraulic grade line (ft/ft)		0.063
P2 = 2 year, 24 hour rainfall (in.)		4.8

$$T = \frac{0.007(nL)^{0.8}}{(P_2)^{0.5}\, s^{0.4}}$$

Tc = 0.23 hr

Tc = 14.06 min

Shallow Concentrated Flow

L= Length of Shallow Concentrated Flow (ft)	329.0	Unpaved
	0.0	Paved
Unpaved Velocity (ft/s)	3.67	
Paved Velocity (ft/s)	NA	
S = Slope of Hydraulic Grade Line (ft/ft)	0.052	

$$T_{unpaved} = \frac{L}{16.1345 \times S^{0.5}}$$

Tc = 1.50 min

$$T_{paved} = \frac{L}{20.3282 \times S^{0.5}}$$

Tc = 0 min

Total Time of Concentration 15.55 min

Holiday Inn Alachua

Post Development DA 1

Time of Concentration

Overall Flow Length (ft)	715
Initial Elevation	122.00
Final Elevation	102.00

Sheet Flow

L = Flow Length (ft)		300.0
n = Mannings Roughness Coefficient		Ashpalt
	n =	0.030
S = slope of hydraulic grade line (ft/ft)		0.030
P2 = 2 year, 24 hour rainfall (in.)		4.8

$$T = \frac{0.007(nL)^{0.8}}{(P_2)^{0.5}\, s^{0.4}}$$

Tc = 0.08 hr

Tc = 4.52 min

L = Flow Length (ft)		0.0
n = Mannings Roughness Coefficient		Smooth
	n =	0.011
S = Slope of Hydraulic Grade Line (ft/ft)		0.028
P2 = 2 year, 24 hour rainfall (in.)		4.8

$$T = \frac{0.007(nL)^{0.8}}{(P_2)^{0.5}\, s^{0.4}}$$

Tc = 0.000 hr

Tc = 0.000 min

Shallow Concentrated Flow

L= Length of Shallow Concentrated Flow (ft)	0.0	Unpaved
	415.0	Paved
Unpaved Velocity (ft/s)	2.74	
Paved Velocity (ft/s)	3.46	
S = Slope of Hydraulic Grade Line (ft/ft)	0.029	

$$T_{unpaved} = \frac{L}{16.1345 \times S^{0.5}}$$

Tc = 0.00 min

$$T_{paved} = \frac{L}{20.3282 \times S^{0.5}}$$

Tc = 2.001 min

Total Time of Concentration 6.52 min

Attachment A

Soil Borings

GSE Engineering & Consulting, Inc.

SUMMARY REPORT OF A GEOTECHNICAL SITE EXPLORATION

HOLIDAY INN ALACHUA
ALACHUA, ALACHUA COUNTY, FLORIDA

GSE PROJECT No. 12872

Prepared For:

MPH HOTELS, INC.

SEPTEMBER 2016

Certificate of Authorization No. 27430

GSE Engineering & Consulting, Inc.

September 19, 2016

Mr. Randy Gibbons
MPH Hotels, Inc.
100 2nd Avenue South
St. Petersburg, Florida 33701

Subject: Summary Report of a Geotechnical Site Exploration
Holiday Inn Alachua
Alachua, Alachua County, Florida
GSE Project No. 12872

Dear Mr. Gibbons:

GSE Engineering & Consulting, Inc. (GSE) is pleased to submit this geotechnical site exploration report for the above referenced project.

Presented herein are the findings and conclusions of our exploration, including the geotechnical parameters and recommendations to assist with building foundation, stormwater management, and pavement designs.

GSE appreciates this opportunity to have assisted you on this project. If you have any questions or comments concerning this report, please contact us.

Sincerely,

GSE Engineering & Consulting, Inc.

Digitally signed by Kenneth L Hill
DN: c=US, o=IdenTrust ACES Business Representative, ou=GSE ENGINEERING AND CONSULTING INC, cn=Kenneth L Hill, 0.9.2342.19200300.100.1.1=A01098000 0001569A281F0F00007AC9
Date: 2016.09.19 10:28:34 -04'00'

Corey A. Dunlap, P.E.
Senior Geotechnical Engineer
Florida Registration No. 77678

Kenneth L. Hill, P.E.
Principal Geotechnical Engineer
Florida Registration No. 40146

CAD/KLH:bm
Z:Projects\12872 Holiday Inn Alachua/12872.doc

Distribution: Addressee (2)
File (1)

GSE Engineering & Consulting, Inc.
5590 SW 64th Street, Suite B
Gainesville, Florida 32608
(352) 377-3233 Phone ◆ (352) 377-0335 Fax
www.gseengineering.com
Certificate of Authorization No. 27430

TABLE OF CONTENTS

LIST OF FIGURES ii

1.0 INTRODUCTION 1-1
1.1 General 1-1
1.2 Project Description 1-1
1.3 Purpose 1-2

2.0 FIELD AND LABORATORY TESTS 2-1
2.1 General Description 2-1
2.2 Auger Borings 2-1
2.3 Standard Penetration Test Borings 2-1
2.4 Soil Laboratory Tests 2-1

3.0 FINDINGS 3-1
3.1 Surface Conditions 3-1
3.2 Subsurface Conditions 3-1
3.3 Review of Published Data 3-2
3.4 Laboratory Soil Analysis 3-3

4.0 EVALUATION AND RECOMMENDATIONS 4-1
4.1 General 4-1
4.2 Groundwater 4-1
4.3 Building Foundations 4-1
4.4 Building Undercut 4-2
4.5 Pavements 4-4
4.6 Site Preparation 4-5
4.7 Quality Control and Construction Materials Testing 4-6
4.8 Stormwater Management 4-6
4.9 Fill Suitability 4-7
4.10 Surface Water Control and Landscaping 4-7

5.0 FIELD DATA 5-1
5.1 Auger Boring Logs 5-2
5.2 Standard Penetration Test Soil Boring Logs 5-3
5.3 Laboratory Results 5-4
5.4 Key to Soil Classification 5-5

6.0 LIMITATIONS 6-1
6.1 Warranty 6-1
6.2 Auger and SPT Borings 6-1
6.3 Site Figures 6-1
6.4 Unanticipated Soil Conditions 6-1
6.5 Misinterpretation of Soil Engineering Report 6-1

LIST OF FIGURES

1. Project Site Location Map
2. Site Plan Showing Approximate Locations of Field Tests
3. Building Undercut Detail

1.0 INTRODUCTION

1.1 General

GSE Engineering & Consulting, Inc. (GSE) has completed this geotechnical exploration for the proposed Holiday Inn hotel to be located in Alachua, Alachua County, Florida. This exploration was performed in accordance with GSE Proposal No. 2016-220 dated August 11, 2016. Mr. Michael P. Holtz, President of MPH Hotels, Inc., authorized our services.

1.2 Project Description

This project will consist of a hotel to be located along the east side of NW 167th Boulevard in Alachua, Alachua County, Florida (Figure 1). Mr. Sergio Reyes, P.E. with EDA Engineers-Surveyors-Planners, Inc. (EDA) provided information about the project including a preliminary site plan entitled "Concept Plan – Option 1" dated August 6, 2016 which illustrates the proposed site layout and topography.

After our site exploration, another site plan was provided showing some changes to the parking lot and stormwater management facility configuration. Additionally, we were informed the finished floor elevation would be set at 124 feet and a retaining wall would be constructed on the northwest corner of the property to lower the site grades. The existing site grades in the area of the building generally slope down from 129 feet at the northwest corner to 115 feet at the southeast corner. This suggests the grades at the northwest corner of the building will be cut at least 5 feet and the grades at the southeast corner of the building will be filled at least 9 feet. At this time, it is unclear whether a stem wall for the structure will be utilized to raise the finished floor or whether this entire portion of the site will be filled. Based on the preliminary plan provided, we assume the entire portion of the site near the southeast corners of the building and parking lot will be filled.

The hotel structure is proposed for the northern portion of the site. The building will be four stories tall with a ground floor area of ±14,500 square feet. A pool will be located on the north side of the hotel. The hotel construction type has not yet been determined. We anticipate the hotel construction will be concrete for the first story and wood frame above. Structural loads have not yet been determined. For the purpose of this evaluation, we assume the structural loads will be less than 6 kips per foot for load bearing walls and less than 200 kips for columns.

A parking lot will be located just south of the hotel, and a stormwater management facility is proposed for the southern portion of the property. The current plan for the stormwater management facility is to cut into grade on the northwest portion of the basin, and create a berm on the southeast portion of the basin to retain the stormwater. We understand a dry retention basin is proposed, and the top elevation of the basin is 108 feet and the bottom elevation of the basin is 102 feet.

A recent aerial photograph of the site was obtained. The site plan and aerial photograph were used in preparation of this exploration and report. In an effort to complete this report in a timely manner so that other engineering disciplines may be engaged and the design process continue moving forward, we have made some assumptions about the final designs. Should the final designs differ from the above assumptions, the Geotechnical Engineer shall be notified of the changes and given the opportunity to reevaluate the geotechnical recommendations within this report.

1.3 Purpose

The purpose of this geotechnical exploration was to determine the general subsurface conditions, evaluate these conditions with respect to the proposed construction, and prepare geotechnical parameters and recommendations to assist with building foundation, stormwater management, and pavement designs.

2.0 FIELD AND LABORATORY TESTS

2.1 General Description

The procedures used for field sampling and testing are in general accordance with industry standards of care and established geotechnical engineering practices for this geographic region. This exploration consisted of performing six (6) Standard Penetration Test (SPT) borings to depths of 30 feet below land surface (bls) in the area of the proposed building, one (1) SPT boring to a depth of 20 feet bls in the area of the proposed pool, four (4) auger borings to depths of 5 feet bls in the area of the parking lot, and four (4) auger borings to depths of 15 feet bls in the area of the proposed stormwater management facility.

The soil borings were performed at the approximate locations as shown on Figure 2. The borings were located at the site using the provided site plan, Global Positioning System (GPS) coordinates, and obvious site features as reference. The boring locations should be considered approximate. The soil borings were performed on August 30 and August 31, 2016.

2.2 Auger Borings

The auger borings were performed in accordance with ASTM D1452. The borings were performed with flight auger equipment that was rotated into the ground in a manner that reduces soil disturbance. After penetrating to the required depth, the auger was retracted and the soils collected on the auger flights were field classified and placed in sealed containers. Representative samples of each stratum were retained from the auger boring. Results from the auger borings are provided in Section 5.1.

2.3 Standard Penetration Test Borings

The soil borings were performed with a drill rig employing mud rotary drilling techniques and Standard Penetration Testing (SPT) in accordance with ASTM D1586. The SPTs were performed continuously to 10 feet and at 5-foot intervals thereafter. Soil samples were obtained at the depths where the SPTs were performed. The soil samples were classified in the field, placed in sealed containers, and returned to our laboratory for further evaluation.

After drilling to the sampling depth and flushing the borehole, the standard two-inch O.D. split-barrel sampler was seated by driving it 6 inches into the undisturbed soil. Then the sampler was driven an additional 12 inches by blows of a 140-pound hammer falling 30 inches. The number of blows required to produce the next 12 inches of penetration were recorded as the penetration resistance (N-value). These values and the complete SPT boring logs are provided in Section 5.2.

Upon completion of the sampling, the boreholes were abandoned in accordance with Water Management District guidelines.

2.4 Soil Laboratory Tests

The soil samples recovered from the soil borings were returned to our laboratory, and examined to confirm the field descriptions. Representative samples were then selected for laboratory testing. The laboratory tests consisted of seventeen (17) percent soil fines passing the No. 200 sieve determinations, seventeen (17) natural moisture content determinations, five (5) Atterberg Limits tests, and three (3) constant head hydraulic conductivity tests. These tests were performed in order to aid in classifying the soils and to further evaluate their engineering properties. The laboratory tests are provided in Section 5.3.

3.0 FINDINGS

3.1 Surface Conditions

Mr. Jeandona Doreste with GSE visited the site on August 25, 2016 to observe the site conditions and mark the boring locations. Mr. Doreste revisited the site on August 26, 2016 with a representative of Jason Kite, LLC to clear lanes that provide access to the boring locations for the drilling equipment.

The site is located along the east side of NW 167th Boulevard just north of U.S. Highway 441. The property is bordered by a residential neighborhood to the north, commercial developments to the west and south, and planted pine trees to the east. The site appears to have been previously cleared and burned. However, thick scrub brush has overtaken the site since the site was burned. A few medium to large trees are sporadically located on the site.

The topography at the site is gently to moderately sloping down toward the southeast from the northwest. The regional topography is also gently to moderately sloping down toward the south. The provided preliminary site plan also contains existing topography information. The plan indicates the site grades generally range from 98 feet at the southeast corner to 130 feet at the northwest corner.

3.2 Subsurface Conditions

The locations of the auger and SPT borings are provided on Figure 2. Complete logs for the borings are provided in Sections 5.1 and 5.2. Descriptions for the soils encountered are accompanied by the Unified Soil Classification System symbol (SM, SP-SM, etc.) and are based on visual examination of the recovered soil samples and the laboratory tests performed. Stratification boundaries between the soil types should be considered approximate, as the actual transition between soil types may be gradual.

The auger borings located in the proposed stormwater management facility indicate the subsurface conditions are relatively consistent. The borings generally encountered interbedded strata of clayey to very clayey sand (SC) and sandy clay to clay (CL/CH) to depths of approximately 11 to 15 feet bls. These soils are generally underlain by silty clayey sand to very silty clayey sand (SM-SC) to the explored depths of 15 feet bls. Auger boring P-1 was performed on the uphill side of the proposed basin location, and initially penetrated 7 feet of silty sand (SM). The underlying silty clayey sand (SM-SC) layer was not encountered by this boring. Auger boring P-4 initially penetrated a 12 inch thick layer of silty sand (SM).

The auger borings located in the proposed parking lot area indicate the subsurface conditions are relatively variable. The borings generally encountered interbedded strata of silty sand (SM), clayey to very clayey sand (SC), and sandy clay (CH) from ground surface to the explored depths of up to 5 feet bls.

The SPT borings performed in the building area and pool indicate the subsurface conditions are relatively consistent. The borings initially penetrated 0.5 to 3 feet of sand with silt and silty sand (SP-SM, SM). This was underlain by interbedded strata of clayey to very clayey sand (SC) and sandy clay to clay (CL/CH, CH) to depths ranging between 9 to 21 feet bls. Beneath the clay-rich layer, interbedded strata of silty sand, clayey sand, and silty clayey sand (SM, SC, SM-SC) soils were then encountered to the explored depths of up to 30 feet bls.

The SPTs performed in the borings indicate the surficial sand with silt and silty sand (SP-SM, SM) soils are generally in medium dense conditions with N-values ranging from 14 to 22 blows per foot. The underlying clay-rich soils (SC, CL/CH, CH) are generally in medium dense to dense and stiff to very stiff conditions with N-values ranging between 9 and 37 blows per foot. The deeper silty and clayey soils (SM, SC, SM-SC) are generally in loose to dense conditions with N-values ranging from 9 to 38 blows per foot.

Groundwater was not encountered in the borings within the explored depths at the time of drilling.

3.3 Review of Published Data

The site is mapped as two soil series by the Soil Conservation Service (SCS) Soil Survey for Alachua County[1]. The following soil descriptions are from the Soil Survey.

Bivans sand, 5 to 8 percent slopes – This is a sloping, poorly drained soil on short breaking slopes and along hillsides of the uplands. The areas are irregular and elongated in shape. They range from about 5 to 40 acres.

Typically, the surface layer is dark gray sand about 5 inches thick. The subsurface layer is light brownish gray sand about 5 inches thick. It has a few nodules of ironstone and fragments of phosphatic limestone. The subsoil extends to a depth of 59 inches. The upper 20 inches is gray sandy clay and a few nodules of ironstone and fragments of phosphatic limestone. The next 29 inches is gray, mottled sandy clay. Between depths of 59 and 80 inches, the underlying material is gray, mottled sandy clay.

Included with this soil in mapping are small areas of Blichton, Boardman, Lochloosa, and Wacahoota soils. Small areas of soils that are similar to Bivans soils but that have a very dark gray or black loamy sand surface layer 8 to 12 inches thick over a sandy clay loam subsoil are also included in some areas. Small areas of Bivans soil that have slopes of 2 to 5 percent are included. Total included areas are about 15 percent or less.

In this Bivans soil, the subsurface layer and upper part of the subsoil are saturated by a perched water table for 1 to 3 months during most years. Wetness is caused mainly by hillside seepage. Surface runoff is rapid. The available water capacity is low to medium. Permeability is moderate to moderately rapid in the surface and subsurface layers. It is very slow to slow in the subsoil. Natural fertility is low to medium, and the organic matter content is moderately low to moderate in the surface layer.

Kendrick sand, 5 to 8 percent slopes. This sloping, well drained soil is usually in elongated areas on long slopes of uplands. The areas are small to relatively large and range from about 10 to 125 acres.

Typically, the surface layer is grayish brown sand about 6 inches thick. The subsurface layer is yellowish brown sand to a depth of 24 inches. The subsoil extends to a depth of 76 inches or more. The upper 5 inches of the subsoil is yellowish brown, mottled sandy loam; the next 27 inches is strong brown sandy clay loam; and the lower 20 inches is yellowish brown, mottled sandy clay loam.

[1] Soil Survey of Alachua County, Florida. Soil Conservation Service, U.S. Department of Agriculture.

Included with this soil are small areas of soils that are similar to Kendrick soils but have a brownish yellow or yellowish brown loamy subsoil less than 20 inches below the surface or have fine sand surface and subsurface layers. Also included are a few areas of soils that are sandy clay at a depth of 20 to 40 inches. Small areas of Arredondo, Blichton, Gainesville, and Lochloosa soils are in some areas. A few areas of Kendrick soils have 2 to 5 percent slopes or 8 to 12 percent slopes. Small moderately eroded spots are included in some areas. Limestone boulders and sinkholes are in some areas and are shown by appropriate symbols. Total included areas are about 20 percent.

In this Kendrick soil, the available water capacity is low in the sandy surface and subsurface layers and medium to high in the subsoil. Permeability is rapid in the sandy surface and subsurface layers, moderate in the upper part of the subsoil, and slow to moderately slow in the lower part. Natural fertility is low in the sandy layers and medium in the loamy subsoil. Organic matter content is low. The water table is more than 72 inches below the surface. Surface runoff is medium.

3.4 Laboratory Soil Analysis

Selected soil samples recovered from the soil borings were analyzed for the percent soil fines passing the No. 200 sieve, natural moisture content, Atterberg Limits, and hydraulic conductivity. Samples selected for laboratory testing were collected at depths ranging from near ground surface up to 20 feet bls. These tests were performed to confirm visual soil classification and evaluate their engineering properties. The complete laboratory report is provided in Section 5.3.

The laboratory tests indicate the tested soils consist of silty sand, clayey sand, silty clayey sand, very clayey sand, sandy clay, and clay with sand. The tested silty sand (SM) contains approximately 18 to 26 percent soil fines passing the No. 200 sieve with natural moisture contents of about 11 to 17 percent. The tested clayey sand (SC) contains approximately 29 percent soil fines passing the No. 200 sieve with a natural moisture content of about 19 percent. The tested silty clayey sand (SC-SM) contains approximately 28 percent soil fines passing the No. 200 sieve with a natural moisture content of about 22 percent. The tested very clayey sand (SC) contains approximately 30 to 45 percent soil fines passing the No. 200 sieve with natural moisture contents of about 14 to 28 percent. The tested sandy clay (CL/CH, CH) contains approximately 57 to 68 percent soil fines passing the No. 200 sieve with natural moisture contents of about 33 to 51 percent. The tested clay with sand (CH) contains approximately 73 to 81 percent soil fines passing the No. 200 sieve with natural moisture contents of about 41 to 53 percent.

The Atterberg Limits tests indicate the tested sandy clay to clay with sand (CL/CH, CH) has Liquid Limit (LL) values of 69 to 95, Plastic Limit (PL) values of 26 to 53, and Plasticity Index (PI) values of 17 to 69. Overall, these values generally correspond to materials with high potential (LL > 60 and PI > 35) for expansive behavior[2].

The constant head hydraulic conductivity test results indicate the near-surface silty sand (SM) has hydraulic conductivity values of 0.2 to 0.6 feet per day. The tested deeper silty clayey sand with lenses of clay (SM-SC) did not flow suggesting this type of soil is confining.

---

[2] U.S. Department of the Army USA, 1983, Foundations in Expansive Soils, TM 5-818-7, p. 4-1.

4.0 EVALUATION AND RECOMMENDATIONS

4.1 General

The following recommendations are made based upon our understanding of the proposed construction, a review of the attached soil borings and laboratory test data, and experience with similar projects and subsurface conditions. If plans or the location of proposed construction changes from those discussed previously, GSE requests the opportunity to review and possibly amend our recommendations with respect to those changes.

The final design of a foundation system is dependent upon adequate integration of geotechnical and structural engineering considerations. Consequently, GSE must review the final foundation design in order to evaluate the effectiveness and applicability of our initial analyses, and to determine if additional recommendations may be warranted. Without such a review, the recommendations presented herein could be misinterpreted or misapplied resulting in potentially unacceptable performance of the foundation system.

The performance of site improvements may be sensitive to their post-construction relationship to site groundwater levels, seepage zones, or soil/rock characteristics exposed at final site grades. GSE recommends that use of boring information for final design of all site improvements be predicated on proper horizontal and vertical control of borings.

In this section of the report, we present our geotechnical parameters and recommendations to assist with building foundation, stormwater management, and pavement designs as well as our general site preparation guidelines.

4.2 Groundwater

Groundwater was not encountered in the boreholes at the time of the drilling operation. The County Soil Survey indicates the seasonal high groundwater table should be at a depth of greater than 72 inches. However, considering the relatively uniform layer of clay-rich soils, we expect the seasonal high groundwater table to be a perched condition that will develop on top of the clay-rich soils after periods of intense or sustained seasonal rainfall. The seasonal high groundwater table is expected to dissipate down the hill toward the southeast relatively quickly.

4.3 Building Foundations

The soil borings near the proposed building footprint indicate the soils at the site are relatively consistent. The borings indicate approximately 0.5 to 3 feet of sand with silt and silty sand overlies clay-rich soils to depths ranging between 9 to 21 feet bls. These soils are generally underlain by interbedded strata of silty sand, clayey sand, and silty clayey sand.

The laboratory tests indicate the near-surface clay-rich soils generally have high potential for expansive behavior. These types of soils are relatively common in this portion of Alachua County. Structures supported by expansive soils are subject to differential foundation movement as these soils expand and contract with varying moisture fluctuations. Therefore, we recommend these soils be undercut and replaced. Our undercutting recommendations are detailed in Section 4.4.

Based upon the soil conditions encountered, our limited understanding of the structural loads and site grading, and the recommended undercutting operation, we recommend the building be supported by conventional, shallow strip and/or spread foundations. We recommend the shallow foundations be designed for a maximum allowable gross bearing pressure of 4,000 psf. The gross bearing pressure is defined as the soil contact pressure that can be imposed from the maximum structural loads, weight of the concrete foundations, and weight of the soil above the foundations. The foundations should be designed based upon the maximum load that could be imposed by all loading conditions.

The foundations should be embedded a minimum of 18 inches below the lowest adjacent grade. Interior foundations or thickened sections should be embedded a minimum of 12 inches. The foundations should have minimum widths of 18 inches for strip footings, and 24 inches for columns, even though the maximum soil bearing pressure may not be fully developed.

Due to the mostly sandy nature of the undercut backfill, we expect settlement to be mostly elastic in nature. The majority of the settlement will occur on application of the loads, during and immediately following construction. Using the recommended maximum bearing pressure, the assumed maximum structural loads, and the field and laboratory test data which we have correlated into the strength and compressibility characteristics of the subsurface soils, we estimate the total settlements of the structure to be 1 inch or less, with approximately half of it occurring upon load application (during construction).

Differential settlement results from differences in applied bearing pressures and the variations in the compressibility characteristics of the subsurface soils. For the building pad prepared as recommended, we anticipate differential settlement of less than 1/2 inch.

Post-construction settlement of the structures will be influenced by several interrelated factors, such as (1) subsurface stratification and strength/compressibility characteristics of the bearing soils; (2) footing size, bearing level, applied loads, and resulting bearing pressures beneath the foundation; (3) site preparation and earthwork construction techniques used by the contractor, and (4) external factors, including but not limited to vibration from off-site sources and groundwater fluctuations beyond those normally anticipated for the naturally-occurring site and soil conditions which are present.

Our settlement estimates for the structure are based upon our limited understanding of the structural loads and site grading and the use of successful adherence to the site preparation recommendations presented later in this report. Any deviation from our project understanding and/or our site preparation recommendations could result in an increase in the estimated post-construction settlement of the structure.

4.4 Building Undercut

Considering the amount of expansive soils located near ground surface beneath the proposed structure, we recommend a mass undercutting operation be performed. The intent of the undercutting program is to remove the expansive soils from the majority of the “active zone” and replace them with non-expansive fill. Figure 3 illustrates the typical building undercut detail.

We recommend the undercut be performed to a minimum depth of 7 feet beneath the finished floor elevation. At the time of this report, the finished floor elevation has been set at 124 feet, indicating the undercut bottom elevation will be 117 feet.

We recommend the undercut begin at the southeast side of the building and proceed up the hill toward the northwest. The undercut should be performed for the entire building profile, and a minimum of 8 feet beyond the edges of the building.

The undercut beneath the building profile should initially be backfilled with 18 inches of crushed limerock. Outside of the building profile, the outer edge of the undercut should be backfilled with 6 inches of crushed limerock, creating a slope down toward the outer edge of the undercut from the building profile. The crushed limerock backfill should meet FDOT gradation requirements and be compacted in maximum 6-inch loose lifts to a minimum density of 98 percent of the Modified Proctor maximum dry density (ASTM D-1557). The intent of initially backfilling the undercut with crushed limestone is to create a buffer of impermeable material that prevents moisture fluctuations in the underlying expansive soils.

Above the crushed limerock, clean sand may be used to backfill the remaining portions of the undercut. Considering the amount of unsuitable soils on-site, we anticipate the undercut backfill to be imported. The clean sand fill should be compacted in maximum 12-inch loose lifts to a minimum 95 percent of the Modified Proctor maximum dry density (ASTM D1557).

Considering the undercut will be extended into confining soils and the backfill will consist of clean sand, a “bowl effect” will be created beneath the structure. Therefore, it is imperative that surface and ground water be intercepted prior to entering the undercut. We recommend an FDOT Type II underdrain be installed to prevent surface and groundwater from permeating into the undercut area. The underdrain should be located on the outside of the undercut on top of the crushed limerock backfill as illustrated in Figure 3. The underdrain should be located on the south, west, and north portions of the undercut area. The underdrain should be sloped such that water is able to freely flow out of the drain, and the discharge point should be located such that water does not back up into the drain.

The long term performance of the underdrain is imperative to proper foundation performance. Therefore, we recommend cleanouts be located at an appropriate spacing in the underdrain so adequate maintenance can be performed. Failure of the underdrain could result in differential foundation movement of the structure. Furthermore, proper grading away from the structure and surface water management on all sides of the building should be maintained such that stormwater cannot enter the undercut area.

Considering the undercut will be cut into the hillside, there is a chance for sand seems to leach trapped groundwater into the excavation. This is commonly known as hillside seepage. This should be accounted for by the contractor, and a contingency plan should be developed should this condition occur.

We recommend the undercutting and backfilling be performed under the observation of the Geotechnical Engineer of record. The Geotechnical Engineer should meet with the earthwork contractor to confirm the locations of the recommended undercutting prior to commencing work. The Geotechnical Engineer should inspect the bottom of the undercuts prior to the contractor placing the backfill. Field density tests should be performed on the undercut backfill at a minimum of 1 test for each 2,500 square feet of building area for each 1-foot lift of fill material.

The above recommendations are based in part on the preliminary grading plan, the finished floor elevation, and an assumed foundation embedment of 2 to 3 feet. The Geotechnical Engineer shall review final grading and foundation plans prior to construction to ensure the above recommendations remain valid for the final design.

4.5 Pavements

Overall soil conditions encountered by our borings at this site are suitable for supporting conventional limerock base and asphalt wearing surface pavements. We have not been provided the anticipated traffic loading conditions; therefore, the following pavement component recommendations should be used only as guidelines. The below recommendations are intended to be minimums. Increasing base course and asphalt thicknesses would increase the design life of the pavement.

We recommend a minimum separation of 24 inches be present between the bottom of the base course and the top of the clay-rich soils containing greater than about 25 percent soil fines. The provided preliminary grading plan suggests that the east end of the parking lot will likely be constructed on top of fill soils and the west end of the parking lot will likely be constructed at grade. Considering this preliminary information, review of the boring logs suggests this separation will likely be present along the majority of the parking lot. However, should the site grading change and portions of the parking lot be constructed beneath existing grades, the Geotechnical Engineer shall be notified and given the opportunity to determine whether undercutting is required to achieve the 24-inch separation.

In areas where the minimum 24 inch separation is not able to be achieved through grading design, we recommend these soils be undercut. The undercut should extend a minimum of 24 inches beneath the bottom of the base course. The undercut should extend laterally until the clay-rich soils are no longer encountered and free-draining sandy soils have been penetrated. The undercut should be backfilled with either on-site or imported sandy free-draining soils containing less than 10 percent soil fines. The backfill should be placed in maximum 24-inch loose lifts that are compacted to a minimum 95 percent of the Modified Proctor maximum dry density (ASTM D1557).

4.5.1 Stabilized Subgrade

The stabilized subgrade should have a minimum Limerock Bearing Ratio (LBR) of 40, with a minimum thickness of 12 inches. The stabilized subgrade can be imported material or a mixture of imported and on-site material. If a mix is proposed, a mix design should be performed to determine the optimum mix proportions. The stabilized subgrade should be compacted to a minimum of 98 percent of the Modified Proctor maximum dry density (ASTM D1557) for soils with less than 15 percent fines content. Soils with 15 percent or greater fines content should be compacted to 100 percent of the Standard Proctor maximum dry density (ASTM D698).

4.5.2 Base Course

The base course should consist of crushed limerock having a LBR of at least 100. Limerock should be obtained from a FDOT approved source, and should meet FDOT gradation requirements. The base course thickness should be a minimum of 6 inches in automobile parking areas and 8 inches in driveways. The base course should be compacted to at least 98 percent of the Modified Proctor maximum dry density (ASTM D1557).

The constructability of differing base course thicknesses may be difficult, and having a uniform 8-inch thick base course may be more practical.

4.5.3 Wearing Surface

The asphalt-wearing surface should consist of an FDOT Type SP Hot Mix Asphalt mixture. For automobile parking areas, the thickness should be a minimum of 1.5 inches. For driveway areas, the thickness should be a minimum of 2 inches. The asphalt-wearing surface should consist of an SP-12.5 mix. The asphalt should be compacted to at least 95 percent of the mix design density.

The constructability of differing asphalt thicknesses may be difficult, and having a uniform 2-inch thick asphalt wearing surface may be more practical.

4.6 Site Preparation

A mass undercutting operation for the structure is recommended considering the amount of near-surface expansive soils and is discussed in Section 4.4. The following recommendations are our general guidelines for site preparation.

4.6.1 Stripping

Strip the construction limits and 10 feet beyond the perimeter of all grass, roots, topsoil, pavement, and other deleterious materials. You should expect to strip to depths of 12 or more inches. Deeper stripping will likely be necessary due to major root systems present at the site.

4.6.2 Dewatering

Considering the amount of excavations into hillsides, temporary dewatering may be necessary for this project. We anticipate dewatering can be accomplished with sumps placed near the construction area, or with underdrains connected to a vacuum pump.

In any case, the site should always be graded to promote runoff and limit the amount of ponding. Localized ponding of stormwater is expected without proper grading during construction, and could render previously acceptable surfaces unacceptable.

4.6.3 Proof-Rolling

Proof-roll the subgrade with heavy rubber-tired equipment, such as a loaded front-end loader or dump truck, to identify any loose or soft zones not found by the soil borings. The proof-rolling should be monitored by a geotechnical engineer or qualified technician. Undercut or otherwise treat these zones as recommended by the geotechnical engineer in this report.

4.6.4 Fill Placement

Imported fill placed to raise the site grades should consist of clean sand having less than 10 percent passing the No. 200 sieve. On-site soils meeting the requirements of Section 4.9 may also be used as structural fill. However, we do not anticipate many of the native soils to be suitable for structural fill. The fill should be placed in maximum 12-inch loose lifts that are compacted to at least 95 percent of the Modified Proctor maximum dry density (ASTM D1557). If lighter “walk-behind” compaction equipment is used, this may require lifts of 4 inches or less to achieve the required degree of compaction.

4.7 Quality Control and Construction Materials Testing

It should be noted that the geotechnical engineering design does not end with the advertisement of the construction documents. As the geotechnical engineer of record, GSE is the most qualified to perform the construction materials testing that will be required for this project.

The benefits of having the geotechnical engineer of record also perform the construction materials testing are numerous. If GSE continues to be involved with the project through construction, we will be able to constantly re-evaluate and possibly alter our geotechnical recommendations in a timely and cost effective manner once final design and construction techniques are developed. This often results in cost savings for the project.

We recommend performing compaction testing beneath the concrete floor slab and the building foundations. We recommend one test be performed every 2,500 square feet of undercut area beneath the building per foot of backfill. We recommend a compaction test be performed for each 10,000 square feet of pavement area per foot of fill or native material, or a minimum of three tests each, whichever is greater.

4.8 Stormwater Management

The soil conditions at the stormwater management facility are relatively consistent. The borings generally encountered confining silty and clayey soils from near ground surface to the explored depths of 15 feet bls. Auger boring P-1 was performed on the uphill side of the proposed basin location and initially penetrated 7 feet of silty sand. However, after shifting the basin configuration, this boring is no longer located within the proposed basin area.

The current plan for the proposed basin is a dry retention basin with top elevation of 108 feet and bottom elevation of 102 feet. A berm is proposed for the southeast portion of the basin to retain the stormwater. Considering the results of the borings, the confining layer depth will be situated at the basin bottom elevation. Therefore, some undercutting of the basin bottom will be required.

We recommend the entire basin bottom be undercut a minimum of 4 feet. Considering a basin bottom elevation of 102 feet, the bottom of the undercut will be situated at elevation 98 feet. We recommend the undercut be extended laterally toward the southeast until the native site grade topography contour of 98 feet has been intersected. The undercut should be backfilled with imported clean sand fill having a maximum of 5 percent soil fines passing the No. 200 sieve and a minimum hydraulic conductivity of 20 feet per day. The undercut backfill should be placed in maximum 24-inch loose lifts and compacted to no greater than 90 percent of the Modified Proctor maximum dry density (ASTM D1557).

Large cuts into the hillside on the north end of the proposed basin location could encounter sand seems within the confining soils that allow trapped groundwater to percolate into the basin. This should be accounted for during the basin design and construction.

The seasonal high groundwater table is expected to be a perched condition that will develop on top of the confining soils. The laboratory permeability tests indicate the tested native silty sand (SM) has hydraulic conductivity values of approximately 0.2 to 0.6 feet per day. However, the majority of this material will be removed by the basin construction.

Based upon the preliminary design provided, the results of the soil borings and laboratory tests, and the recommended undercutting operation, our recommended soil parameters for the stormwater management design in the explored areas are presented below. The parameters below do not consider a factor of safety. Considering the basin will be cut into the confining soils on the north end, the basin will only be able to recover through the undercut recommended on the southeast side of the basin. The below parameters consider this condition, but the stormwater recovery design should also take this into account. Should recovery of the basin not be achievable with this condition, underdrains or some other type of recovery aide may be required.

1. Base elevation of effective or mobilized aquifer (average elevation of confining layer) equal to 98 feet.
2. Unsaturated vertical infiltration rate of 15 feet per day.
3. Horizontal hydraulic conductivity equal to 20 feet per day.
4. Specific yield (fillable porosity) of 25 percent.
5. Average seasonal high groundwater table elevation equal to 98 feet.

The above parameters have been determined based upon the basin design provided at the time of this report. Should the basin configuration be changed, the Geotechnical Engineer shall be notified of the changes and given the opportunity to determine whether the above parameters are applicable to the new basin configuration.

4.9 Fill Suitability

The majority of the soils that will be excavated from this site are expected to be unsuitable clay-rich soils. These soils with greater than 25 percent soil fines are not considered a suitable source of structural fill.

Some of the lighter silty and clayey sand soils (SM, SC) can be used as structural fill, but these soils are a less desirable source of fill because they are more moisture sensitive and more difficult to work and compact. If you wish to use the on-site clayey and silty sand soils we recommend they contain less than 25 percent soil fines (Passing the No. 200 sieve) with a Plasticity Index less than 10 and Liquid Limit less than 40. Mixing of soils with higher fines content with those with less fines content may increase their overall workability.

4.10 Surface Water Control and Landscaping

Roof gutters should be used to divert runoff away from the building. The gutter downspouts should discharge a minimum of 10 feet from the structure to reduce the amount of water collecting around the foundations and entering the undercut backfill. Where possible, the gutter downspouts should discharge directly into the storm sewer system or onto the asphalt paved areas in order to reduce the amount of water collecting around the foundations. Grading of the site should be such that water is diverted away from the building on all sides to reduce the potential for erosion and water infiltration along the foundation.

With respect to landscaping, it is recommended that existing and planted trees and large “tree-like” shrubbery with potential for developing large root systems be planted a minimum distance of half their mature height, and preferably their expected final height, away from the structure. The purpose of this is to reduce the potential for foundation or slab movements from the growth of root systems as the landscaping matures.

Consideration should also be given to using landscaping that has a low water demand, so that excessive irrigation is not conducted around the structures.

If excavations for underground utilities encounter the clay-rich soils, the excavations should be made such that they do not trap water (i.e. “swimming pool” or “bowl” effect). Sloping the excavations, installing underdrains, or extending the excavation to a more pervious area can achieve this. Allowing surface water to become trapped within utility trenches or other excavations (including footings) serves as a potential water source for the clay, which can result in shrink swell of these soils. Furthermore, during construction, surface water within the building areas must be controlled such that the water does not become trapped and represent a source of water for the underlying clay-rich soils. Mismanagement of the surface water during construction within the building footprint could result in subsequent post-construction slab movement.

The above recommendations are intended to maintain relatively consistent moisture contents within the clay-rich expansive soils encountered by the borings and to prevent surface water from entering the undercut backfill area. The importance of proper surface water control and landscaping placement cannot be overemphasized in accomplishing this objective.

5.0 FIELD DATA

5.1 Auger Boring Logs

GSE Engineering & Consulting, Inc.
5590 SW 64th Street, Suite B
Gainesville, Florida 32608
Telephone: (352) 377-3233
Fax: (352) 377-0335

CLIENT MPH Hotels, Inc. **PROJECT NAME** Holiday Inn Alachua

PROJECT NUMBER 12872 **PROJECT LOCATION** Alachua, Alachua County, Florida

BORING NUMBER R-1

DATE PERFORMED 8/30/2016

DRILLING CONTRACTOR Whitaker Drilling, Inc.

GROUND WATER LEVELS: LOGGED BY WDI

AT TIME OF DRILLING NE CHECKED BY CAD

ESTIMATED SEASONAL HIGH NA

NOTES Ground Elevation: 118 ft

DEPTH (ft)	GRAPHIC LOG	SAMPLE TYPE NUMBER	MATERIAL DESCRIPTION
0.0		AU 1	(SM) Dark gray silty SAND *%PASS - 200 = 24* *MC = 16*
1.5		AU 2	(SM) Dark brown silty SAND
2.5			
5.0			Bottom of borehole at 5.0 feet.

BORING NUMBER R-2

DATE PERFORMED 8/30/2016

DRILLING CONTRACTOR Whitaker Drilling, Inc.

GROUND WATER LEVELS: LOGGED BY WDI

AT TIME OF DRILLING NE CHECKED BY CAD

ESTIMATED SEASONAL HIGH NA

NOTES Ground Elevation: 115 ft

DEPTH (ft)	GRAPHIC LOG	SAMPLE TYPE NUMBER	MATERIAL DESCRIPTION
0.0		AU 1	(SM) Dark gray silty SAND
0.5		AU 2	(SC) Gray and brown clayey SAND with trace limestone
2.5			
3.0		AU 3	(CH) Greenish gray sandy CLAY *%PASS - 200 = 68* *MC = 33* *LL = 95 ; PL = 26 ; PI = 69*
5.0			Bottom of borehole at 5.0 feet.

(Continued Next Page)

GSE Engineering & Consulting, Inc.
5590 SW 64th Street, Suite B
Gainesville, Florida 32608
Telephone: (352) 377-3233
Fax: (352) 377-0335

CLIENT MPH Hotels, Inc. **PROJECT NAME** Holiday Inn Alachua

PROJECT NUMBER 12872 **PROJECT LOCATION** Alachua, Alachua County, Florida

BORING NUMBER R-3

DATE PERFORMED 8/30/2016

DRILLING CONTRACTOR Whitaker Drilling, Inc.

GROUND WATER LEVELS: LOGGED BY WDI

AT TIME OF DRILLING NE CHECKED BY CAD

ESTIMATED SEASONAL HIGH NA

NOTES Ground Elevation: 114 ft

DEPTH (ft)	GRAPHIC LOG	SAMPLE TYPE NUMBER	MATERIAL DESCRIPTION
0.0		AU 1	(SC) Brown and gray very clayey SAND *%PASS - 200 = 45* *MC = 27*
1.0		AU 2	(SM) Dark brown silty SAND
2.5		AU 3	
5.0			Bottom of borehole at 5.0 feet.

BORING NUMBER R-4

DATE PERFORMED 8/30/2016

DRILLING CONTRACTOR Whitaker Drilling, Inc.

GROUND WATER LEVELS: LOGGED BY WDI

AT TIME OF DRILLING NE CHECKED BY CAD

ESTIMATED SEASONAL HIGH NA

NOTES Ground Elevation: 109 ft

DEPTH (ft)	GRAPHIC LOG	SAMPLE TYPE NUMBER	MATERIAL DESCRIPTION
0.0		AU 1	(SM) Dark gray silty SAND *%PASS - 200 = 19* *MC = 11*
1.0		AU 2	(SC) Dark brown clayey SAND
2.5		AU 3	(CH) Gray sandy CLAY
3.0			
5.0			Bottom of borehole at 5.0 feet.

GSE Engineering & Consulting, Inc.
5590 SW 64th Street, Suite B
Gainesville, Florida 32608
Telephone: (352) 377-3233
Fax: (352) 377-0335

CLIENT MPH Hotels, Inc. **PROJECT NAME** Holiday Inn Alachua

PROJECT NUMBER 12872 **PROJECT LOCATION** Alachua, Alachua County, Florida

BORING NUMBER P-1

DATE PERFORMED 8/30/2016

DRILLING CONTRACTOR Whitaker Drilling, Inc.

GROUND WATER LEVELS: LOGGED BY WDI

AT TIME OF DRILLING NE CHECKED BY CAD

ESTIMATED SEASONAL HIGH NA

NOTES Ground Elevation: 113 ft

DEPTH (ft)	GRAPHIC LOG	SAMPLE TYPE NUMBER	MATERIAL DESCRIPTION
0.0		AU 1	(SM) Dark gray silty SAND
1.0			(SM) Dark brown silty SAND
2.5		AU 2 PS	*%PASS - 200 - 18* *MC = 12* *k_h = 0.6 ft per day*
5.0			
7.0			
7.5		AU 3	(CL/CH) Pale green and orange CLAY with sand
10.0		AU 4	
12.5			
13.0		AU 5	(CL/CH) Brown CLAY with sand
15.0			Bottom of borehole at 15.0 feet.

BORING NUMBER P-2

DATE PERFORMED 8/30/2016

DRILLING CONTRACTOR Whitaker Drilling, Inc.

GROUND WATER LEVELS: LOGGED BY WDI

AT TIME OF DRILLING NE CHECKED BY CAD

ESTIMATED SEASONAL HIGH NA

NOTES Ground Elevation: 110 ft

DEPTH (ft)	GRAPHIC LOG	SAMPLE TYPE NUMBER	MATERIAL DESCRIPTION
0.0		AU 1	(CL/CH) Pale gray and tan CLAY with sand
1.0		AU 2	(SC) Dark brown clayey SAND with trace limestone *%PASS - 200 = 29* *MC = 19*
2.5			
3.0		AU 3	(CL/CH) Brown and gray sandy CLAY with trace limestone
5.0			
5.5			(CL/CH) Pale greenish tan CLAY
7.5		AU 4	
10.0			
11.0			(SM-SC) Pale gray silty clayey SAND with lenses of clay *%PASS - 200 = 28* *MC = 22* *k_h = No Flow*
12.5		AU 5 PS	
15.0			Bottom of borehole at 15.0 feet.

(Continued Next Page)

GSE Engineering & Consulting, Inc.
5590 SW 64th Street, Suite B
Gainesville, Florida 32608
Telephone: (352) 377-3233
Fax: (352) 377-0335

CLIENT MPH Hotels, Inc. **PROJECT NAME** Holiday Inn Alachua

PROJECT NUMBER 12872 **PROJECT LOCATION** Alachua, Alachua County, Florida

BORING NUMBER P-3

DATE PERFORMED 8/30/2016

DRILLING CONTRACTOR Whitaker Drilling, Inc.

GROUND WATER LEVELS: LOGGED BY WDI

AT TIME OF DRILLING NE CHECKED BY CAD

ESTIMATED SEASONAL HIGH NA

NOTES Ground Elevation: 109 ft

DEPTH (ft)	SAMPLE TYPE NUMBER	MATERIAL DESCRIPTION
0.0	AU 1 PS	(SC) Dark brown clayey SAND
1.0	AU 2	(SC) Grayish brown very clayey SAND with trace limestone *%PASS - 200 = 32* *MC = 27*
2.5		
3.0	AU 3	(SC) Gray clayey SAND with lenses of clay
5.0	AU 4	(CL/CH) Pale greenish gray and orange CLAY
7.5	AU 5	
10.0		
11.0	AU 6	(CL/CH) Gray CLAY with sand
12.5	AU 7	(SM-SC) Pale gray very silty clayey SAND
15.0		Bottom of borehole at 15.0 feet.

BORING NUMBER P-4

DATE PERFORMED 8/30/2016

DRILLING CONTRACTOR Whitaker Drilling, Inc.

GROUND WATER LEVELS: LOGGED BY WDI

AT TIME OF DRILLING NE CHECKED BY CAD

ESTIMATED SEASONAL HIGH NA

NOTES Ground Elevation: 103 ft

DEPTH (ft)	SAMPLE TYPE NUMBER	MATERIAL DESCRIPTION
0.0	AU 1 PS	(SM) Dark gray silty SAND *%PASS - 200 = 18* *MC = 17* *k_h = 0.2 ft per day*
1.0	AU 2	(SC) Dark brown very clayey SAND *%PASS - 200 = 37* *MC = 22*
2.5		
5.0	AU 3	(CL/CH) Greenish gray CLAY
7.0	AU 4	(CL/CH) Pale green sandy CLAY
7.5		
10.0		
11.0	AU 5	(SM-SC) Pale greenish gray very silty clayey SAND
12.5		
15.0		Bottom of borehole at 15.0 feet.

5.2 Standard Penetration Test Soil Boring Logs

GSE Engineering & Consulting, Inc.
5590 SW 64th Street, Suite B
Gainesville, Florida 32608
Telephone: (352) 377-3233
Fax: (352) 377-0335

BORING NUMBER B-1

CLIENT MPH Hotels, Inc.
PROJECT NAME Holiday Inn Alachua
PROJECT NUMBER 12872
PROJECT LOCATION Alachua, Alachua County, Florida
DATE STARTED 8/30/16 **COMPLETED** 8/30/16
GROUND ELEVATION 128 ft **HOLE SIZE**
DRILLING CONTRACTOR Whitaker Drilling, Inc.
GROUND WATER LEVELS:
DRILLING METHOD Mud Rotary
AT TIME OF DRILLING NE
LOGGED BY WDI **CHECKED BY** CAD
ESTIMATED SEASONAL HIGH NA
NOTES

DEPTH (ft)	MATERIAL DESCRIPTION	CONTACT DEPTH (ft)	SAMPLE TYPE NUMBER	BLOW COUNTS (N VALUE)	LIQUID LIMIT, %	PLASTIC LIMIT, %	PLASTICITY INDEX	PERCENT PASS NO. 200 SIEVE	MOISTURE CONTENT, %
0	(SP-SM) Medium dense brown SAND with silt and cemented sand fragments	2	SPT 1	15-10-12 (22)					
	(SC) Medium dense brown cemented very clayey SAND with limestone fragments		SPT 2	8-9-10 (19)					
5		5	SPT 3	14-12-13 (25)					
	(CH) Very stiff green and orange sandy CLAY		SPT 4	8-8-10 (18)					
			SPT 5	7-7-11 (18)					
		9	SPT 6	11-12-15 (27)					
10	(CH) Very stiff green and orange CLAY with sand and traces of flint rock								
		12							
	(SM) Medium dense pale gray silty SAND		SPT 7	7-8-5 (13)					
15									
20			SPT 8	9-11-12 (23)				26	13
25			SPT 9	6-7-8 (15)					
30		30	SPT 10	10-9-12 (21)					
	Bottom of borehole at 30.0 feet.								

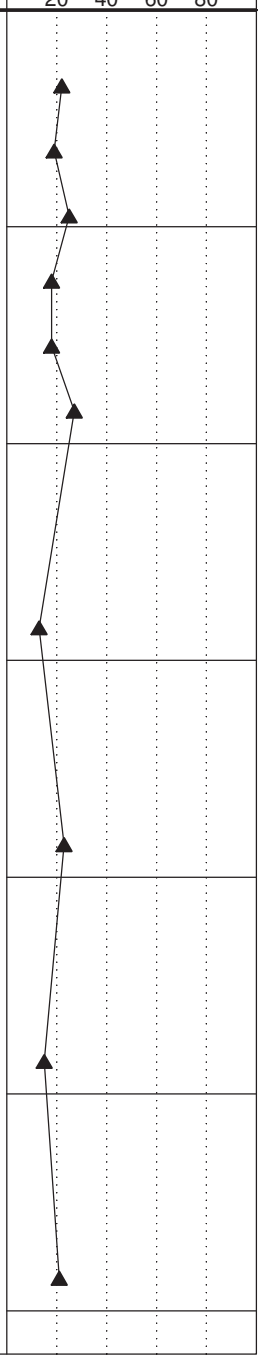

GSE Engineering & Consulting, Inc.
5590 SW 64th Street, Suite B
Gainesville, Florida 32608
Telephone: (352) 377-3233
Fax: (352) 377-0335

BORING NUMBER B-2

CLIENT MPH Hotels, Inc.
PROJECT NAME Holiday Inn Alachua
PROJECT NUMBER 12872
PROJECT LOCATION Alachua, Alachua County, Florida
DATE STARTED 8/30/16 **COMPLETED** 8/30/16
GROUND ELEVATION 122 ft **HOLE SIZE**
DRILLING CONTRACTOR Whitaker Drilling, Inc.
GROUND WATER LEVELS:
DRILLING METHOD Mud Rotary
AT TIME OF DRILLING NE
LOGGED BY WDI **CHECKED BY** CAD
ESTIMATED SEASONAL HIGH NA
NOTES

DEPTH (ft)	GRAPHIC LOG	MATERIAL DESCRIPTION	CONTACT DEPTH (ft)	SAMPLE TYPE NUMBER	BLOW COUNTS (N VALUE)	LIQUID LIMIT, %	PLASTIC LIMIT, %	PLASTICITY INDEX	PERCENT PASS NO. 200 SIEVE	MOISTURE CONTENT, %
0		(SM) Brown silty SAND (No Sample)	0.5							
		(SC) Medium dense dark brown very clayey SAND with traces of limestone		SPT 1	17-11-10 (21)					
			3	SPT 2	8-10-10 (20)					
		(CH) Very stiff greenish gray CLAY with sand and traces of limestone								
5				SPT 3	8-9-13 (22)	94	34	60	76	41
				SPT 4	9-9-15 (24)					
			7							
		(SC) Dense gray clayey SAND		SPT 5	8-17-20 (37)					
				SPT 6	11-16-15 (31)					
10										
			12							
		(SM-SC) Medium dense to dense pale gray silty clayey SAND								
				SPT 7	15-18-20 (38)					
15										
				SPT 8	6-7-10 (17)					
20										
			22							
		(SM) Medium dense pale gray silty SAND								
				SPT 9	7-9-11 (20)					
25										
		Blow counts for sample 10 not recorded.								
				SPT 10						
30			30							
		Bottom of borehole at 30.0 feet.								

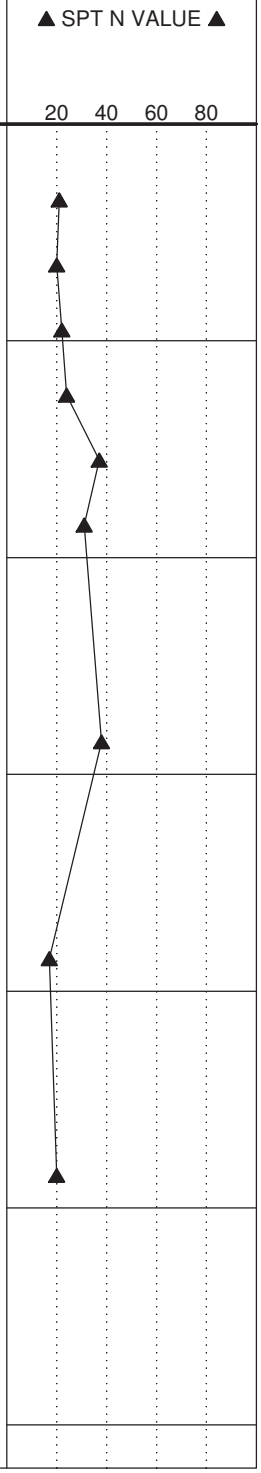

GSE Engineering & Consulting, Inc.
5590 SW 64th Street, Suite B
Gainesville, Florida 32608
Telephone: (352) 377-3233
Fax: (352) 377-0335

BORING NUMBER B-3

CLIENT MPH Hotels, Inc.
PROJECT NAME Holiday Inn Alachua
PROJECT NUMBER 12872
PROJECT LOCATION Alachua, Alachua County, Florida
DATE STARTED 8/30/16 **COMPLETED** 8/30/16
GROUND ELEVATION 118 ft **HOLE SIZE**
DRILLING CONTRACTOR Whitaker Drilling, Inc.
GROUND WATER LEVELS:
DRILLING METHOD Mud Rotary
AT TIME OF DRILLING NE
LOGGED BY WDI **CHECKED BY** CAD
ESTIMATED SEASONAL HIGH NA
NOTES

DEPTH (ft)	GRAPHIC LOG	MATERIAL DESCRIPTION	CONTACT DEPTH (ft)	SAMPLE TYPE NUMBER	BLOW COUNTS (N VALUE)	LIQUID LIMIT, %	PLASTIC LIMIT, %	PLASTICITY INDEX	PERCENT PASS NO. 200 SIEVE	MOISTURE CONTENT, %	▲ SPT N VALUE ▲ (20 40 60 80)
0		(SM) Brown silty SAND (No Sample)	0.5								
		(CL/CH) Stiff dark brown and orange sandy CLAY with cemented sand fragments		SPT 1	2-3-6 (9)						
				SPT 2	6-8-9 (17)	70	53	17	57	51	
5				SPT 3	5-7-7 (14)						
		(CH) Stiff to very stiff green CLAY	6	SPT 4	5-6-6 (12)						
				SPT 5	7-10-8 (18)						
			9	SPT 6	10-10-10 (20)						
10		(SM-SC) Medium dense pale gray silty clayey SAND									
			12								
		(SC) Medium dense pale gray clayey SAND		SPT 7	4-6-7 (13)						
15											
			17								
		(SM-SC) Medium dense pale gray silty clayey SAND		SPT 8	4-6-9 (15)						
20											
			22								
		(SM) Medium dense pale gray silty SAND		SPT 9	4-5-6 (11)						
25											
			27								
		(SC) Loose pale gray clayey SAND		SPT 10	3-4-5 (9)						
30			30								
		Bottom of borehole at 30.0 feet.									

GSE Engineering & Consulting, Inc.
5590 SW 64th Street, Suite B
Gainesville, Florida 32608
Telephone: (352) 377-3233
Fax: (352) 377-0335

BORING NUMBER B-4

CLIENT MPH Hotels, Inc.
PROJECT NAME Holiday Inn Alachua
PROJECT NUMBER 12872
PROJECT LOCATION Alachua, Alachua County, Florida
DATE STARTED 8/30/16 **COMPLETED** 8/30/16
GROUND ELEVATION 124 ft **HOLE SIZE**
DRILLING CONTRACTOR Whitaker Drilling, Inc.
GROUND WATER LEVELS:
DRILLING METHOD Mud Rotary
AT TIME OF DRILLING NE
LOGGED BY WDI **CHECKED BY** CAD
ESTIMATED SEASONAL HIGH NA
NOTES

DEPTH (ft)	GRAPHIC LOG	MATERIAL DESCRIPTION	CONTACT DEPTH (ft)	SAMPLE TYPE NUMBER	BLOW COUNTS (N VALUE)	LIQUID LIMIT, %	PLASTIC LIMIT, %	PLASTICITY INDEX	PERCENT PASS NO. 200 SIEVE	MOISTURE CONTENT, %	▲ SPT N VALUE ▲ (20 40 60 80)
0		(SM) Medium dense dark gray silty SAND									
				SPT 1	5-6-8 (14)						
			3								
		(SC) Medium dense brown and orange very clayey SAND with cemented sand and limestone		SPT 2	8-10-10 (20)						
5				SPT 3	13-10-12 (22)						
				SPT 4	7-8-8 (16)						
			7								
		(CH) Stiff to very stiff green and orange CLAY with sand		SPT 5	8-9-9 (18)	69	20	49	81	45	
				SPT 6	7-5-8 (13)						
10											
			12								
		(SM) Medium dense pale gray silty SAND									
				SPT 7	6-9-7 (16)						
15											
				SPT 8	9-13-10 (23)						
20											
				SPT 9	5-6-5 (11)						
25											
				SPT 10	8-10-10 (20)						
30			30								
		Bottom of borehole at 30.0 feet.									

GSE Engineering & Consulting, Inc.
5590 SW 64th Street, Suite B
Gainesville, Florida 32608
Telephone: (352) 377-3233
Fax: (352) 377-0335

BORING NUMBER B-5

CLIENT MPH Hotels, Inc.
PROJECT NAME Holiday Inn Alachua
PROJECT NUMBER 12872
PROJECT LOCATION Alachua, Alachua County, Florida
DATE STARTED 8/30/16 **COMPLETED** 8/30/16
GROUND ELEVATION 121 ft **HOLE SIZE**
DRILLING CONTRACTOR Whitaker Drilling, Inc.
GROUND WATER LEVELS:
DRILLING METHOD Mud Rotary
AT TIME OF DRILLING NE
LOGGED BY WDI **CHECKED BY** CAD
ESTIMATED SEASONAL HIGH NA
NOTES

DEPTH (ft)	GRAPHIC LOG	MATERIAL DESCRIPTION	CONTACT DEPTH (ft)	SAMPLE TYPE NUMBER	BLOW COUNTS (N VALUE)	LIQUID LIMIT, %	PLASTIC LIMIT, %	PLASTICITY INDEX	PERCENT PASS NO. 200 SIEVE	MOISTURE CONTENT, %
0		(SM) Brown silty SAND (No Sample)	1.5							
		(SC) Medium dense to dense brown cemented very clayey SAND with limestone	4.5	SPT 1	8-8-8 (16)					
				SPT 2	10-15-18 (33)				30	14
5		(CH) Stiff green and red CLAY	6	SPT 3	12-7-7 (14)					
		(CH) Stiff to very stiff green and orange CLAY with sand		SPT 4	6-8-8 (16)					
				SPT 5	7-7-7 (14)					
10			11	SPT 6	7-7-7 (14)					
		(SC) Gray clayey SAND with lenses of clay (No Sample)	14.5	SPT 7	7-6-7 (13)					
15		(CH) Stiff Green CLAY	17							
		(SC) Medium dense gray clayey SAND with lenses of clay		SPT 8	7-7-10 (17)					
20			21							
		(SM) Medium dense pale gray silty SAND		SPT 9	5-6-7 (13)					
25										
30			30	SPT 10	8-8-8 (16)					
		Bottom of borehole at 30.0 feet.								

▲ SPT N VALUE ▲

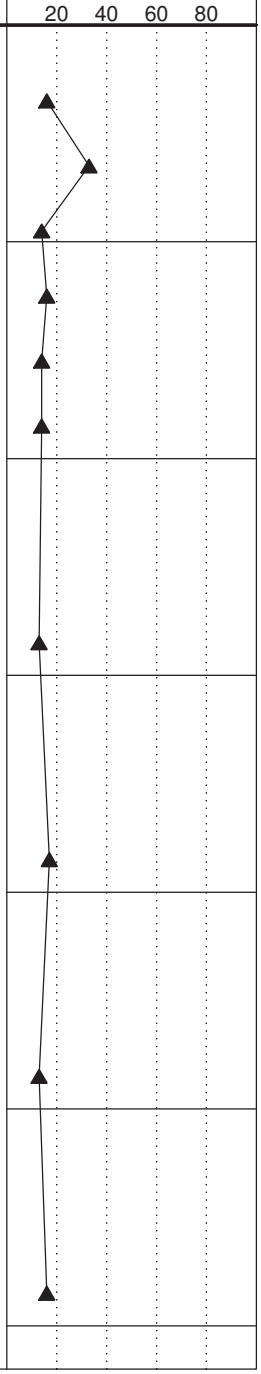

GSE Engineering & Consulting, Inc.
5590 SW 64th Street, Suite B
Gainesville, Florida 32608
Telephone: (352) 377-3233
Fax: (352) 377-0335

BORING NUMBER B-6

CLIENT MPH Hotels, Inc.
PROJECT NAME Holiday Inn Alachua
PROJECT NUMBER 12872
PROJECT LOCATION Alachua, Alachua County, Florida
DATE STARTED 8/30/16 **COMPLETED** 8/30/16
GROUND ELEVATION 116 ft **HOLE SIZE**
DRILLING CONTRACTOR Whitaker Drilling, Inc.
GROUND WATER LEVELS:
DRILLING METHOD Mud Rotary
AT TIME OF DRILLING NE
LOGGED BY WDI **CHECKED BY** CAD
ESTIMATED SEASONAL HIGH NA
NOTES

DEPTH (ft)	GRAPHIC LOG	MATERIAL DESCRIPTION	CONTACT DEPTH (ft)	SAMPLE TYPE NUMBER	BLOW COUNTS (N VALUE)	LIQUID LIMIT, %	PLASTIC LIMIT, %	PLASTICITY INDEX	PERCENT PASS NO. 200 SIEVE	MOISTURE CONTENT, %	▲ SPT N VALUE ▲ (20 40 60 80)
0		(SM) Brown silty SAND (No Sample)	1								
		(SC) Very loose to medium dense brown very clayey SAND with cemented sand fragments		SPT 1	1-1-2 (3)				31	28	
			4	SPT 2	5-6-8 (14)						
5		(CH) Very stiff gray and dark orange CLAY with sand		SPT 3	6-8-8 (16)	83	36	47	73	53	
			6	SPT 4	4-6-6 (12)						
		(CH) Stiff green and orange sandy CLAY	7								
		(CH) Very stiff green CLAY		SPT 5	7-8-10 (18)						
10				SPT 6	9-11-11 (22)						
			12								
		(SM) Medium dense pale gray silty SAND		SPT 7	4-7-8 (15)						
15											
			17								
		(SM-SC) Medium dense pale gray silty clayey SAND		SPT 8	3-5-10 (15)						
20											
			22								
		(SM) Medium dense pale gray silty SAND		SPT 9	5-5-8 (13)						
25											
				SPT 10	3-5-6 (11)						
30			30								
		Bottom of borehole at 30.0 feet.									

GSE Engineering & Consulting, Inc.
5590 SW 64th Street, Suite B
Gainesville, Florida 32608
Telephone: (352) 377-3233
Fax: (352) 377-0335

BORING NUMBER W-1

CLIENT MPH Hotels, Inc.
PROJECT NAME Holiday Inn Alachua
PROJECT NUMBER 12872
PROJECT LOCATION Alachua, Alachua County, Florida
DATE STARTED 8/30/16 **COMPLETED** 8/30/16
GROUND ELEVATION 128 ft **HOLE SIZE**
DRILLING CONTRACTOR Whitaker Drilling, Inc.
GROUND WATER LEVELS:
DRILLING METHOD Mud Rotary
AT TIME OF DRILLING NE
LOGGED BY WDI **CHECKED BY** CAD
ESTIMATED SEASONAL HIGH NA
NOTES

DEPTH (ft)	GRAPHIC LOG	MATERIAL DESCRIPTION	CONTACT DEPTH (ft)	SAMPLE TYPE NUMBER	BLOW COUNTS (N VALUE)	LIQUID LIMIT, %	PLASTIC LIMIT, %	PLASTICITY INDEX	PERCENT PASS NO. 200 SIEVE	MOISTURE CONTENT, %	▲ SPT N VALUE ▲ (20 40 60 80)
0		(SM) Medium dense dark brown silty SAND with cemented sand	2.5	SPT 1	14-9-10 (19)						
		(SC) Medium dense brown and orange very clayey SAND with trace limestone	4	SPT 2	7-8-9 (17)						
5		(CH) Very stiff green and orange sandy CLAY	7	SPT 3	13-11-14 (25)						
				SPT 4	9-10-11 (21)						
		(SC) Medium dense dark gray very clayey SAND with trace limestone	8.5	SPT 5	6-7-10 (17)						
10		(SC) Medium dense pale gray clayey SAND	12	SPT 6	12-13-16 (29)						
		(SM-SC) Medium dense pale gray silty clayey SAND		SPT 7	5-6-7 (13)						
15											
20			20	SPT 8	11-12-13 (25)						
		Bottom of borehole at 20.0 feet.									

5.3 Laboratory Results

GSE Engineering & Consulting, Inc.

SUMMARY REPORT OF LABORATORY TEST RESULTS

Project Number: 12872

Project Name: Holiday Inn Alachua

Boring Number	Depth (ft)	Soil Description	Natural Moisture Content (%)	Liquid Limit	Plastic Limit	Plasticity Index	Percent Passing No. 200 Sieve	Organic Content (%)	Coefficiet of Permeability (ft/day)	Unified Soil Classification
R-1	0 - 0.5	Dark gray silty SAND	16				24			SM
R-2	3 - 3.5	Greenish gray sandy CLAY	33	95	26	69	68			CH
R-3	0 - 0.5	Brown and gray very clayey SAND	27				45			SC
R-4	0 - 0.5	Dark gray silty SAND	11				19			SM
B-1	18.5 - 20	Pale gray silty SAND	13				26			SM
B-2	4 - 5.5	Greenish gray CLAY with sand and traces of limestone	41	94	34	60	76			CH
B-3	2.5 - 4	Dark brown and orange sandy CLAY with cemented sand fragments	51	70	53	17	57			CL/CH
B-4	7 - 8.5	Green and orange CLAY with sand	45	69	20	49	81			CH
B-5	2.5 - 4	Brown cemented very clayey SAND with limestone	14				30			SC
B-6	1 - 2.5	Brown very clayey SAND with cemented sand fragments	28				31			SC
B-6	4 - 5.5	Gray and dark orange CLAY with sand	53	83	36	47	73			CH

GSE Engineering & Consulting, Inc.

SUMMARY REPORT OF LABORATORY TEST RESULTS

Project Number: 12872

Project Name: Holiday Inn Alachua

Boring Number	Depth (ft)	Soil Description	Natural Moisture Content (%)	Liquid Limit	Plastic Limit	Plasticity Index	Percent Passing No. 200 Sieve	Organic Content (%)	Coefficiet of Permeability (ft/day)	Unified Soil Classification
P-1	2 - 4	Dark brown silty SAND	12				18		0.6	SM
P-2	1 - 1.5	Dark brown clayey SAND with trace limestone	19				29			SC
P-2	11 - 13	Pale gray silty clayey SAND with lenses of clay	22				28		No Flow	SM-SC
P-3	1 - 1.5	Grayish brown very clayey SAND with trace limestone	27				32			SC
P-4	0 - 1	Dark gray silty SAND	17				18		0.2	SM
P-4	1 - 1.5	Dark brown very clayey SAND	22				37			SC

5.4 Key to Soil Classification

KEY TO SOIL CLASSIFICATION CHART

Criteria for Assigning Group Symbols and Group Names Using Laboratory Tests				SYMBOLS GRAPHIC	SYMBOLS LETTER	GROUP NAME
COARSE-GRAINED SOILS More than 50% retained on No. 200 sieve	Gravels More than 50% of coarse fraction retained on No. 4 sieve	Clean Gravels	Cu ≥ 4 and 1 ≤ Cc ≤ 3		GW	Well graded GRAVEL
		Less than 5% fines	Cu < 4 and/or 1 > Cc > 3		GP	Poorly graded GRAVEL
		Gravels with fines	Fines classify as ML or MH		GM	Silty GRAVEL
		More than 12% fines	Fines classify as CL or CH		GC	Clayey GRAVEL
	Sands 50% or more of coarse fraction passes No. 4 sieve	Clean Sands	Cu ≥ 6 and 1 ≤ Cc ≤ 3		SW	Well graded SAND
		Less than 5% fines	Cu < 6 and/or 1 > Cc > 3		SP	Poorly graded SAND
		Sand with fines	Fines classify as ML or MH		SP-SM	SAND with silt
		5% ≤ fines < 12%	Fines classify as CL or CH		SP-SC	SAND with clay
		Sand with fines	Fines classify as ML or MH		SM	Silty SAND
		12% ≤ fines < 30%	Fines classify as CL or CH		SC	Clayey SAND
		Sand with fines	Fines classify as ML or MH		SM	Very silty SAND
		30% fines or more	Fines classify as CL or CH		SC	Very clayey SAND
FINE-GRAINED SOILS 50% or more passes the No. 200 sieve	Clays	inorganic	50% ≤ fines < 70%		CL/CH	Sandy CLAY
			70% ≤ fines < 85%		CL/CH	CLAY with sand
			fines ≥ 85%		CL/CH	CLAY
	Silts and Clays Liquid Limit less than 50	inorganic	PI > 7 and plots on/above "A" line		CL	Lean CLAY
			PI < 4 or plots below "A" line		ML	SILT
		organic	Liquid Limit - oven dried / Liquid Limit - not dried < 0.75		OL	Organic clay / Organic silt
	Silts and Clays Liquid Limit 50 or more	inorganic	PI plots on or above "A" line		CH	Fat CLAY
			PI plots below "A" line		MH	Elastic SILT
		organic	Liquid Limit - oven dried / Liquid Limit - not dried < 0.75		OH	Organic clay / Organic silt
HIGHLY ORGANIC SOILS	Primarily organic matter, dark in color, and organic odor				PT	PEAT

CORRELATION OF PENETRATION RESISTANCE WITH RELATIVE DENSITY AND CONSISTENCY

	No. OF BLOWS, N	RELATIVE DENSITY
SANDS:	0 - 4	Very Loose
	5 - 10	Loose
	11 - 30	Medium dense
	31 - 50	Dense
	OVER 50	Very Dense

	No. OF BLOWS, N	CONSISTENCY
SILTS & CLAYS:	0 - 2	Very Soft
	3 - 4	Soft
	5 - 8	Firm
	9 - 15	Stiff
	16 - 30	Very Stiff
	31 - 50	Hard
	OVER 50	Very Hard

	No. OF BLOWS, N	RELATIVE DENSITY
LIMESTONE:	0 - 8	Very Soft
	9 - 18	Soft
	19 - 32	Moderately Hard
	33 - 50	Hard
	OVER 50	Very Hard

SAMPLE GRAPHIC TYPE LEGEND

Location of SPT Sample

Location of Auger Sample

PARTICLE SIZE IDENTIFICATION

BOULDERS:		Greater than 300 mm
COBBLES:		75 mm to 300 mm
GRAVEL:	Coarse -	19.0 mm to 75 mm
	Fine -	4.75 mm to 19.0 mm
SANDS:	Coarse -	2.00 mm to 4.75 mm
	Medium -	0.425 mm to 2.00 mm
	Fine -	0.075 mm to 0.425 mm
SILTS & CLAYS:		Less than 0.075 mm

LABORATORY TEST LEGEND

LL	=	Liquid Limit, %
PL	=	Plastic Limit, %
PI	=	Plasticity Index, %
% PASS - 200	=	Percent Passing the No. 200 Sieve
MC	=	Moisture Content, %
ORG	=	Organic Content, %
k_h	=	Horizontal Hydraulic Conductivity, ft/day

6.0 LIMITATIONS

6.1 Warranty

This report has been prepared for our client for his exclusive use, in accordance with generally accepted soil and foundation engineering practices, and makes no other warranty either expressed or implied as to the professional advice provided in the report.

6.2 Auger and SPT Borings

The determination of soil type and conditions was performed from the ground surface to the maximum depth of the borings, only. Any changes in subsurface conditions that occur between or below the borings would not have been detected or reflected in this report.

Soil classifications that were made in the field are based upon identifiable textural changes, color changes, changes in composition or changes in resistance to penetration in the intervals from which the samples were collected. Abrupt changes in soil type, as reflected in boring logs and/or cross sections may not actually occur, but instead, be transitional.

Depth to the water table is based upon observations made during the performance of the auger and SPT borings. This depth is an estimate and does not reflect the annual variations that would be expected in this area due to fluctuations in rainfall and rates of evapotranspiration.

6.3 Site Figures

The measurements used for the preparation of the figures in this report were made using the provided site plan and by estimating distances from existing structures and site features. Figures in this report were not prepared by a licensed land surveyor and should not be interpreted as such.

6.4 Unanticipated Soil Conditions

The analysis and recommendations submitted in this report are based upon the data obtained from soil borings performed at the locations indicated on Figure 2. This report does not reflect any variations that may occur between these borings.

The nature and extent of variations between borings may not become known until excavation begins. If variations appear, we may have to re-evaluate our recommendations after performing on-site observations and noting the characteristics of any variations.

6.5 Misinterpretation of Soil Engineering Report

GSE Engineering & Consulting, Inc. is responsible for the conclusions and opinions contained within this report based upon the data relating only to the specific project and location discussed herein. If others make the conclusions or recommendations based upon the data presented, those conclusions or recommendations are not the responsibility of GSE.

FIGURES

NORTH

NOT TO SCALE

HOLIDAY INN ALACHUA ALACHUA, ALACHUA COUNTY, FLORIDA GSE PROJECT NO. 12872	PROJECT SITE LOCATION MAP		
	DESIGNED BY : CAD CHECKED BY : KLH DRAWN BY : JMG	GSE Engineering & Consulting, Inc.	FIGURE 1

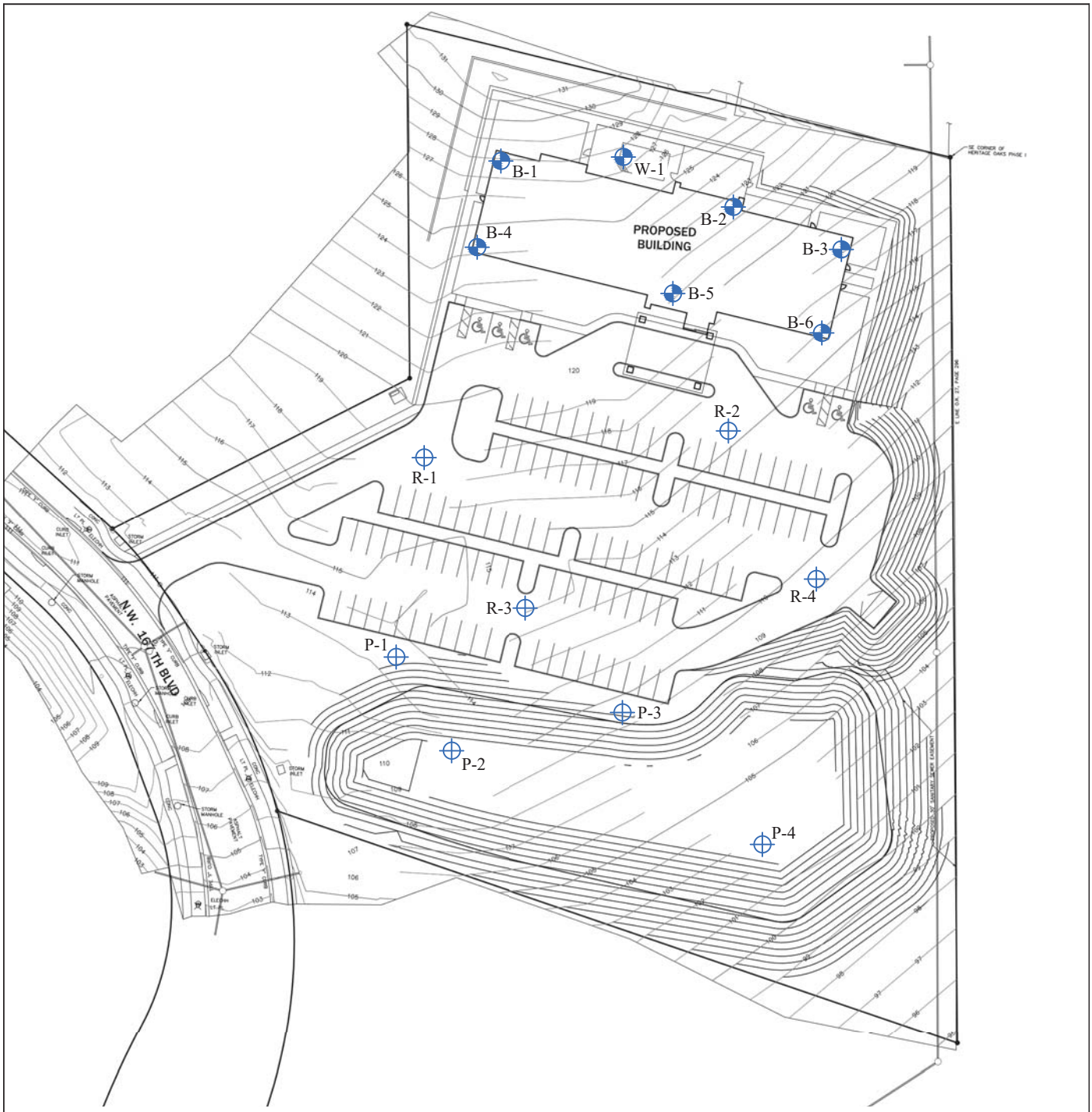

LEGEND :

SPT BORING

AUGER BORING

NORTH

0 90'

SCALE: 1" = 90' APPROX.

HOLIDAY INN ALACHUA
ALACHUA, ALACHUA COUNTY, FLORIDA
GSE PROJECT NO. 12872

SITE PLAN SHOWING APPROXIMATE LOCATIONS OF FIELD TESTS

DESIGNED BY : CAD
CHECKED BY : KLH
DRAWN BY : JMG

GSE Engineering & Consulting, Inc.

FIGURE 2

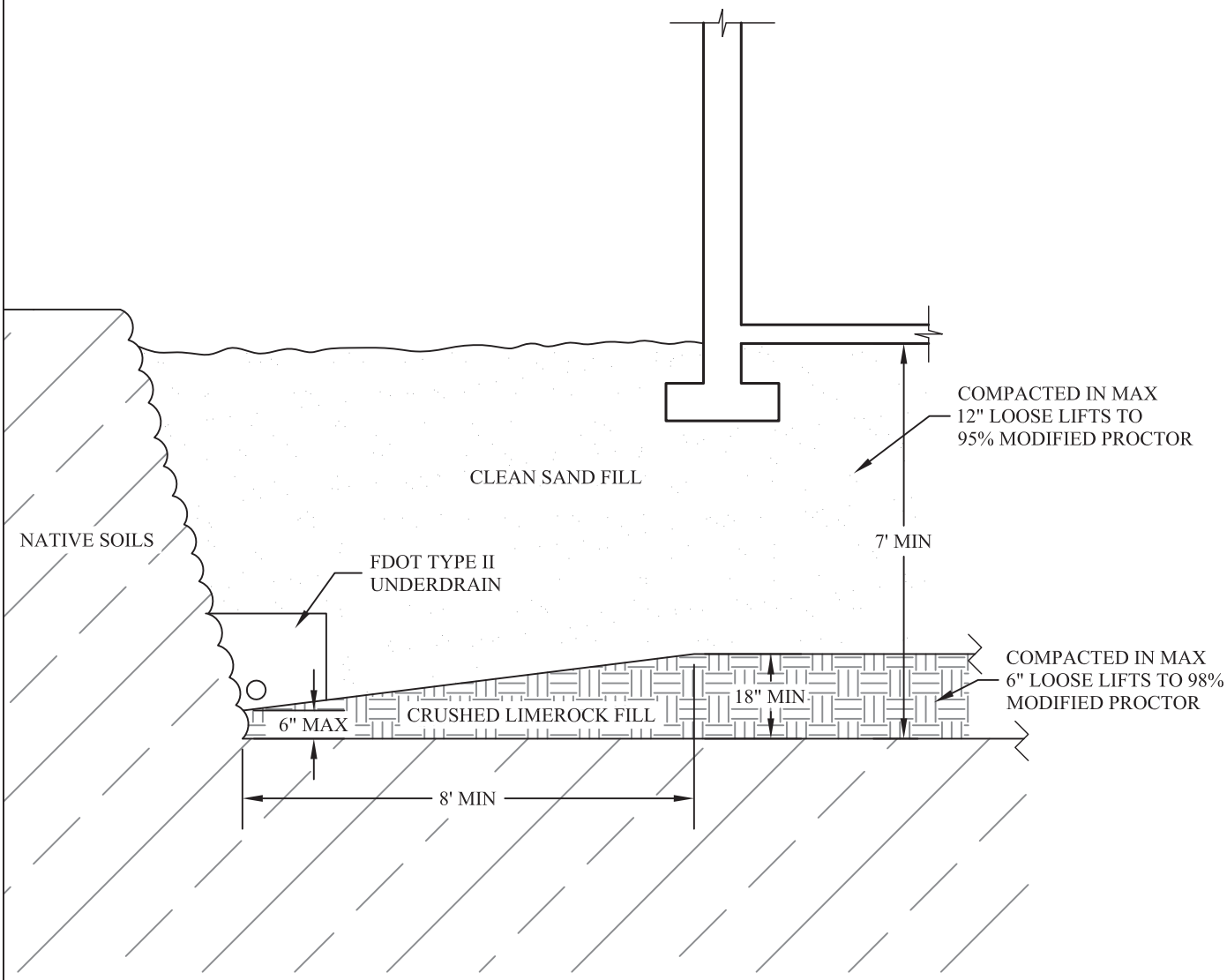

NOT TO SCALE

NOTE: NOT FOR CONSTRUCTION. FOR ILLUSTRATION PURPOSES ONLY.

HOLIDAY INN ALACHUA
ALACHUA, ALACHUA COUNTY, FLORIDA
GSE PROJECT NO. 12872

BUILDING UNDERCUT DETAIL

DESIGNED BY: CAD
CHECKED BY : KLH
DRAWN BY : JMG

GSE Engineering & Consulting, Inc.

FIGURE

3

Attachment B

Pre and Post-Development Drainage Map

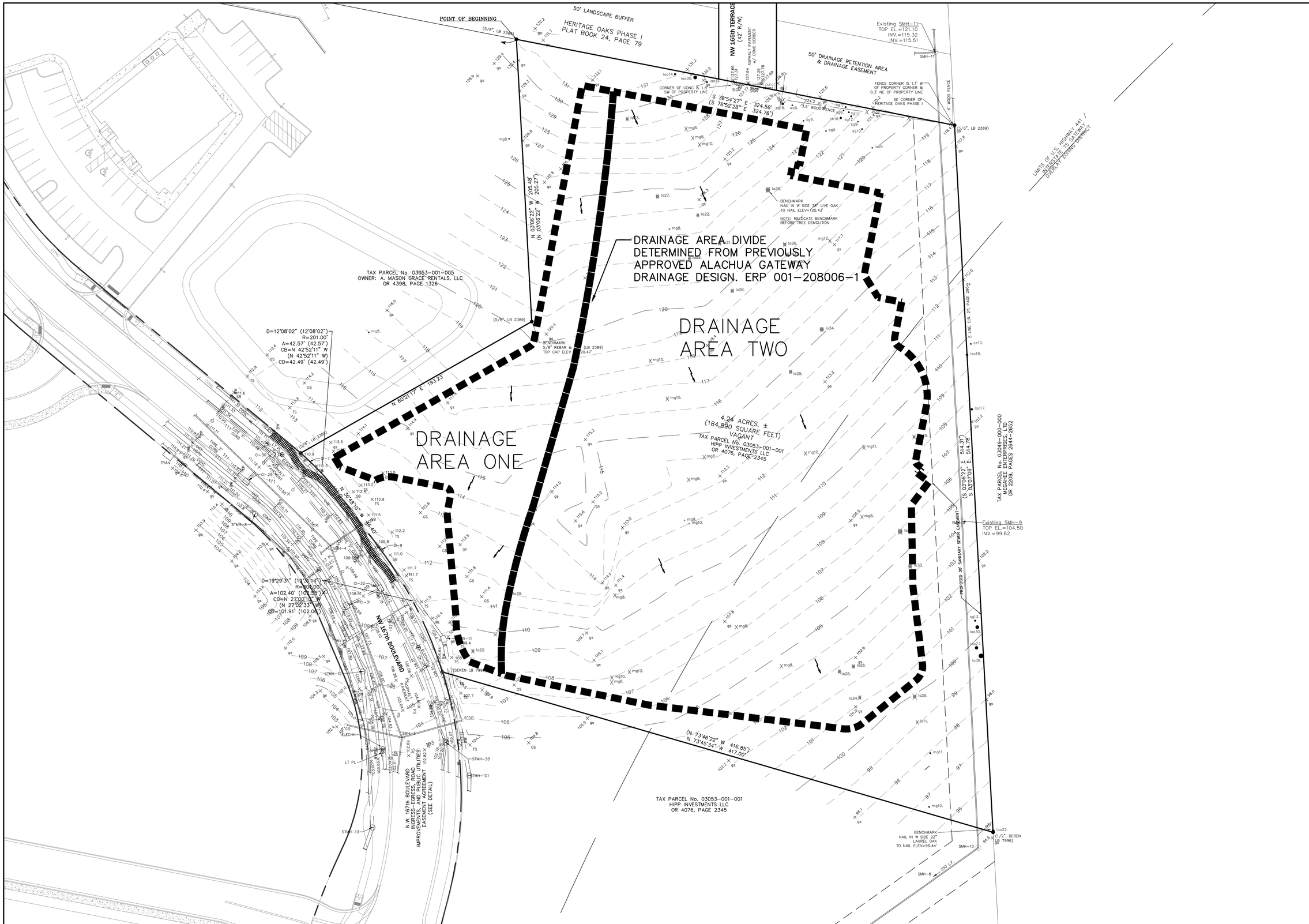

No.	Date	Comment

NORTH

SCALE: 1"= 20'

0 10 20 40

GRAPHIC SCALE

eda 70 years
engineers • surveyors • planners
EB 2699
2404 NW 43rd ST, GAINESVILLE, FLORIDA 32606-6672
TEL: (352) 373-3541 FAX: (352) 373-7249
www.eda.ft.com mail@eda.ft.com

Project: HOLIDAY INN ALACHUA
CITY OF ALACHUA, FLORIDA

Sheet title: PRE DEVELOPMENT DRAINAGE MAP

Project phase: COUNTY SUBMITTAL

Designed: SJR	Drawn: MAB	Checked: TAR
Project No: 16-233	Date: 09/20/16	

Professional Engineer of Record:

Sergio J. Reyes, P.E.
Engineer

47311
Certificate No.

Sheet No.:

C2.00

GENERAL NOTES

1. BUILDING UNDERDRAIN SHALL BE INSTALLED PER GEOTECHNICAL SITE EXPLORATION (GSE PROJECT #12872) AND FOUNDATION PLANS (BY OTHERS).

No.	Date	Comment

NORTH

SCALE: 1"= 20'

0 10 20 40

GRAPHIC SCALE

eda consultants
engineers • surveyors • planners
EB-2289
2404 N.W. 43rd ST, GAINESVILLE, FLORIDA 32606-6452
P: (352) 373-3541 FAX: (352) 373-7268
E: (352) 373-3541 FAX: (352) 373-7268
www.eda-fl.com mail@eda-fl.com

Project: HOLIDAY INN ALACHUA
CITY OF ALACHUA, FLORIDA

Sheet title: PAVING, GRADING AND DRAINAGE PLAN

Project phase: CITY OF ALACHUA RESUBMITTAL

Designed: S.J. Drawn: J.M.B. Checked: TAR

Project No. 16-233 Date: 12/5/2016

Professional Engineer of Record: STATE OF FLORIDA PROFESSIONAL ENGINEER Sergio J. Rodriguez, P.E. No. 47311 Engineer Certificate No.

Sheet No.: C2.00

\engprojects\Holiday Inn - Alachua\Plans\Current DWG\H16233J1.dwg, C2.00 - PGD, 12/5/2016 11:12:13 AM, Meagan Dickey

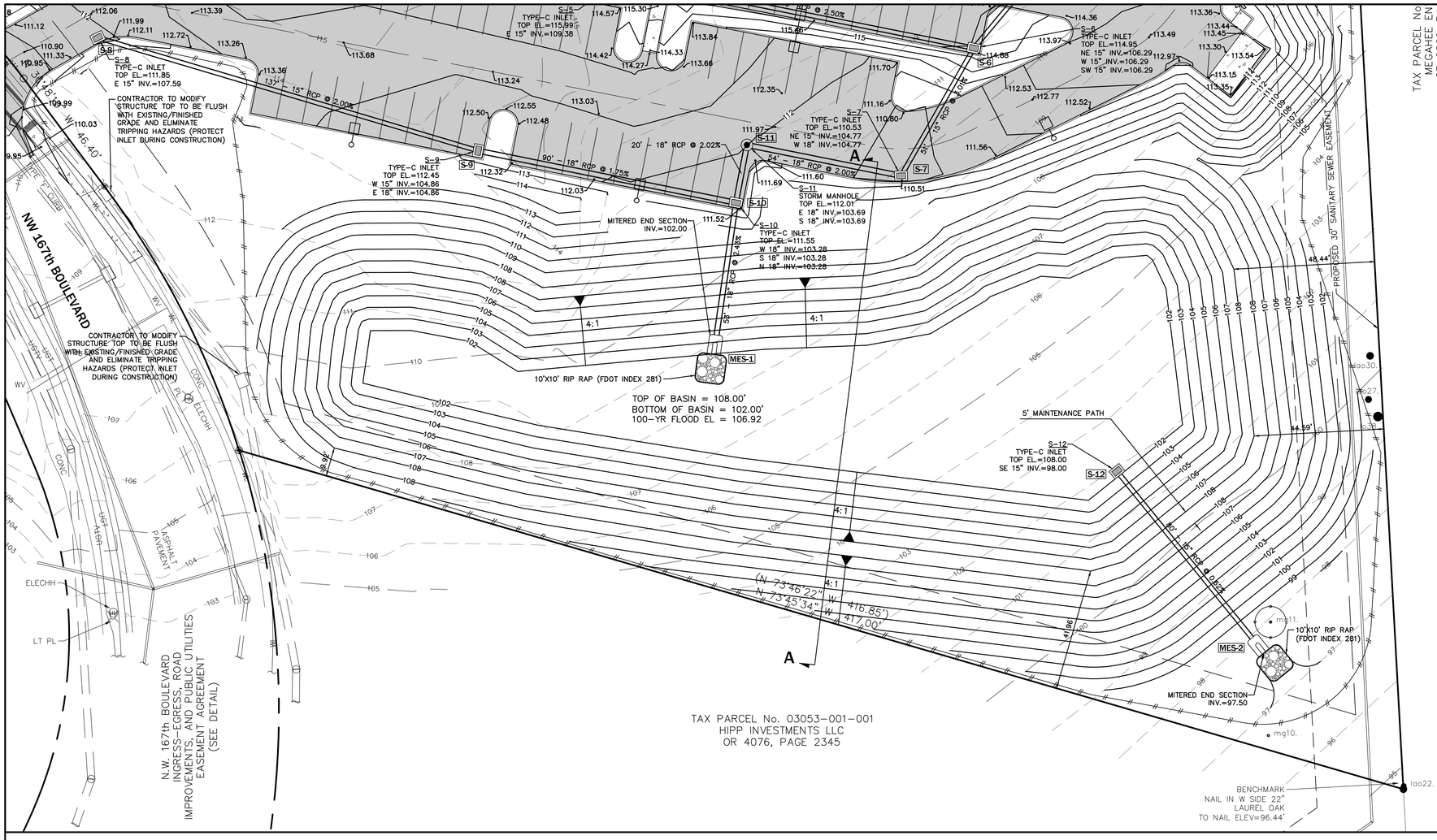

ENGINEER'S CERTIFICATION

1. ENGINEER'S CERTIFICATION:

I HEREBY CERTIFY THAT THE DESIGN OF THE STORMWATER MANAGEMENT SYSTEM FOR THE PROJECT KNOWN AS "HOLIDAY INN ALACHUA" MEETS ALL THE REQUIREMENTS AND HAS BEEN DESIGNED SUBSTANTIALLY IN ACCORDANCE WITH THE ALACHUA COUNTY STORMWATER MANAGEMENT ORDINANCE.

SERGIO REYES, P.E.

MAINTENANCE NOTES

1. MAINTENANCE RESPONSIBILITY:

THE PROPERTY OWNER WILL BE THE ENTITY RESPONSIBLE FOR THE MAINTENANCE OF THE STORMWATER MANAGEMENT SYSTEM.

2. MAINTENANCE PLAN:

A. BASINS SHALL BE MOWED REGULARLY TO AVOID EXCESSIVE VEGETATIVE GROWTH MOWING SCHEDULE SHOULD BE MONTHLY DURING WINTER MONTHS AND MORE FREQUENTLY (BIWEEKLY) DURING SUMMER MONTHS.

B. BASIN SHALL BE CLEANED OUT ANNUALLY OF ANY ACCUMULATED SEDIMENTATION BUILDUP. IF THE BASINS ARE SHOWING EXCESSIVE SEDIMENTATION ACCUMULATION AT THE BASIN BOTTOM, THE BASIN BOTTOM SHALL BE SCRAPED CLEAN MORE OFTEN AS THE CONDITION DICTATES.

C. BASIN SIDE SLOPES SHALL BE MAINTAINED WITH A GOOD STAND OF GRASS. SEASONAL GRASSES SHALL BE PLANTED TO AVOID EROSION (WINTER RYE, SUMMER MILLET).

D. BASINS THAT DO NOT DRAWDOWN PROPERLY AND MAINTAIN STANDING WATER FOR AN EXTENDED PERIOD OF TIME MAY REQUIRE REMEDIAL. THE ENGINEER SHALL BE NOTIFIED TO HELP COORDINATE REMEDIAL ACTION IN THE EVENT THIS OCCURS.

E. THE REQUIRED LANDSCAPING SHALL BE MAINTAINED IN A SOUND CONDITION AT ALL TIMES. ANY DEAD LANDSCAPING MATERIALS SHALL BE REPLACED IMMEDIATELY TO ASSURE PUBLIC SAFETY.

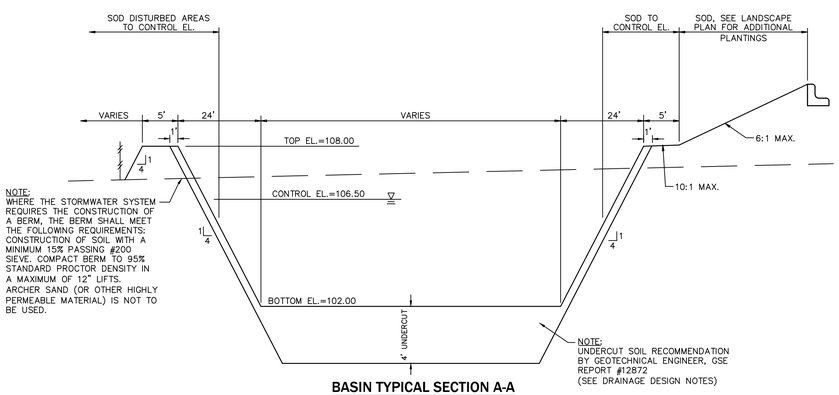

BASIN TYPICAL SECTION A-A

N.T.S.

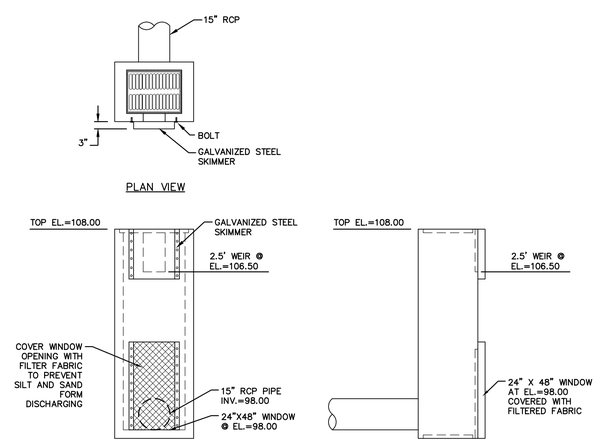

BASIN OUTFALL S-12 DETAIL

N.T.S.

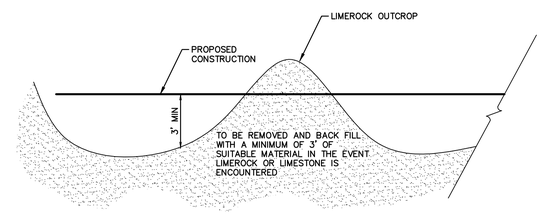

NOTES:

1. IF LIMESTONE OR LIMEROCK OUTCROP IS ENCOUNTERED DURING CONSTRUCTION OF THE BASIN, THE AREA WILL BE OVER-EXCAVATED A MINIMUM OF THREE FEET AND BACKFILLED WITH SUITABLE SOILS TO MEET THE SENSITIVE KARST AREA REQUIREMENTS.

2. IN THE EVENT A SINKHOLE, CAVITIES OR CHIMNEYS DEVELOPS WITHIN THE STORMWATER BASIN, THE FOLLOWING TREATMENT SHALL BE PERFORMED: THE OWNER SHALL NOTIFY SUWANNEE RIVER WATER MANAGEMENT DISTRICT PRIOR TO REMEDIAL ACTION UNLESS POSTPONING THE REPAIR ACTIVITY REPRESENTS AN ENDANGERMENT TO PUBLIC SAFETY. THE SINKHOLE SHALL BE BACKFILLED WITH A SANDY CLAY MIXTURE. THE SANDY CLAY SHALL BE PLACED IN SIX INCH LIFTS WITHIN THE FINAL THREE FEET OF FILL AND ROLLED WITH A HEAVILY LOADED RUBBER TIRE EQUIPMENT. SHOULD SINKHOLE ACTIVITY CONTINUE REPEATEDLY WITHIN A CONFINED AREA, THE OWNER SHALL CONSULT A GEOTECHNICAL ENGINEER TO DETERMINE WHETHER ANY ALTERNATIVE REMEDIAL MEASURES ARE REQUIRED.

LIMEROCK OUTCROP REMOVAL DETAIL

N.T.S.

No.	Date	Comment

NORTH

SCALE: 1"= 20'

0 10 20 40

GRAPHIC SCALE

eda 70 years
engineers • surveyors • planners
EB-2389
2404 NW 43rd ST, GAINESVILLE, FLORIDA 32606-6672
TEL: (352)373-3541 FAX: (352)373-7545
www.eda.fl.com mail@eda.fl.com

Project: HOLIDAY INN ALACHUA
CITY OF ALACHUA, FLORIDA

Sheet title: BASIN DETAILS

Project phase: CITY OF ALACHUA RESUBMITTAL

Designed: S.R. Drawn: J.MARTIN Checked: TAR

Project No. 12-283 Date: 12/05/2016

Professional Engineer of Record: STATE OF FLORIDA PROFESSIONAL ENGINEER Sergio J. Reyes, P.E. Engineer Certificate No. 47311

Sheet No.: C2.20

Attachment C

Pre and Post-Development Conditions

PONDS 3.2 Model

PONDS Version 3.2.0239
Retention Pond Recovery - Refined Method
Copyright 2011
Devo Seereeram, Ph.D., P.E.

Project Data

Project Name:	Pre Holiday Inn Alachua
Simulation Description:	Pre Development Conditions
Project Number:	
Engineer :	
Supervising Engineer:	
Date:	12-05-2016

Aquifer Data

Base Of Aquifer Elevation, [B] (ft datum):	0.00
Water Table Elevation, [WT] (ft datum):	0.00
Horizontal Saturated Hydraulic Conductivity, [Kh] (ft/day):	0.00
Fillable Porosity, [n] (%):	0.00

Vertical infiltration was not considered.

Geometry Data

Equivalent Pond Length, [L] (ft):	0.0
Equivalent Pond Width, [W] (ft):	0.0

Ground water mound is expected to intersect the pond bottom

Stage vs Area Data

Stage (ft datum)	Area (ft^2)

Discharge Structures

Discharge Structure #1 is inactive

Discharge Structure #2 is inactive

Discharge Structure #3 is inactive

Scenario Input Data

Scenario 1 :: FDOT 1 Hour - 1 hr - 100 yr

Hydrograph Type:	Inline SCS
• **Modflow Routing:**	**Not routed**
Repetitions:	1

Basin Area (acres)	2.430
Time Of Concentration (minutes)	15.6
DCIA (%)	0.0
Curve Number	72.4
Design Rainfall Depth (inches)	4.4
Design Rainfall Duration (hours)	1.0
Shape Factor	UHG 323
Rainfall Distribution	FDOT 1 Hour

Initial ground water level (ft datum) 0.00 (default)

No times after storm specified.

Scenario 2 :: FDOT 2 Hour - 2 hr - 100 yr

Hydrograph Type:	Inline SCS
• **Modflow Routing:**	**Not routed**
Repetitions:	1

Basin Area (acres)	2.430
Time Of Concentration (minutes)	15.6
DCIA (%)	0.0
Curve Number	72.4
Design Rainfall Depth (inches)	5.4
Design Rainfall Duration (hours)	2.0
Shape Factor	UHG 323
Rainfall Distribution	FDOT 2 Hour

Initial ground water level (ft datum) 0.00 (default)

No times after storm specified.

Scenario 3 :: FDOT 4 Hour - 4 hr - 100 yr

Hydrograph Type:	Inline SCS
• **Modflow Routing:**	**Not routed**
Repetitions:	1

Basin Area (acres)	2.430
Time Of Concentration (minutes)	15.6
DCIA (%)	0.0
Curve Number	72.4
Design Rainfall Depth (inches)	6.7
Design Rainfall Duration (hours)	4.0
Shape Factor	UHG 323
Rainfall Distribution	FDOT 4 Hour

Initial ground water level (ft datum) 0.00 (default)

No times after storm specified.

Scenario Input Data (cont'd.)

Scenario 4 :: FDOT 8 Hour - 8 hr - 100 yr

Hydrograph Type:	Inline SCS
• **Modflow Routing:**	**Not routed**
Repetitions:	1

Basin Area (acres)	2.430
Time Of Concentration (minutes)	15.6
DCIA (%)	0.0
Curve Number	72.4
Design Rainfall Depth (inches)	8.0
Design Rainfall Duration (hours)	8.0
Shape Factor	UHG 323
Rainfall Distribution	FDOT 8 Hour

Initial ground water level (ft datum) 0.00 (default)

No times after storm specified.

Scenario 5 :: FDOT 24 Hour - 24 hr - 100 yr

Hydrograph Type:	Inline SCS
• **Modflow Routing:**	**Not routed**
Repetitions:	1

Basin Area (acres)	2.430
Time Of Concentration (minutes)	15.6
DCIA (%)	0.0
Curve Number	72.4
Design Rainfall Depth (inches)	11.0
Design Rainfall Duration (hours)	24.0
Shape Factor	UHG 323
Rainfall Distribution	FDOT 24 Hour

Initial ground water level (ft datum) 0.00 (default)

No times after storm specified.

Scenario 6 :: FDOT 72 Hour - 72 hr - 100 yr

Hydrograph Type:	Inline SCS
• **Modflow Routing:**	**Not routed**
Repetitions:	1

Basin Area (acres)	2.430
Time Of Concentration (minutes)	15.6
DCIA (%)	0.0
Curve Number	72.4
Design Rainfall Depth (inches)	13.8
Design Rainfall Duration (hours)	72.0
Shape Factor	UHG 323
Rainfall Distribution	FDOT 72 Hour

Initial ground water level (ft datum) 0.00 (default)

No times after storm specified.

Scenario Input Data (cont'd.)

Scenario 7 :: FDOT 168 Hour - 168 hr - 100 yr

Hydrograph Type:	Inline SCS
• **Modflow Routing:**	**Not routed**
Repetitions:	1

Basin Area (acres)	2.430
Time Of Concentration (minutes)	15.6
DCIA (%)	0.0
Curve Number	72.4
Design Rainfall Depth (inches)	16.0
Design Rainfall Duration (hours)	168.0
Shape Factor	UHG 323
Rainfall Distribution	FDOT 168 Hour

Initial ground water level (ft datum) 0.00 (default)

No times after storm specified.

Scenario 8 :: FDOT 240 Hour - 240 hr - 100 yr

Hydrograph Type:	Inline SCS
• **Modflow Routing:**	**Not routed**
Repetitions:	1

Basin Area (acres)	2.430
Time Of Concentration (minutes)	15.6
DCIA (%)	0.0
Curve Number	72.4
Design Rainfall Depth (inches)	18.0
Design Rainfall Duration (hours)	240.0
Shape Factor	UHG 323
Rainfall Distribution	FDOT 240 Hour

Initial ground water level (ft datum) 0.00 (default)

No times after storm specified.

Worst Case Scenarios

Selection Criteria: <default - All scenarios with valid results>

Maximum Stage = none

Scenarios considered: None

Summary of Results *:: Scenario 1 :: FDOT 1 Hour - 1 hr - 100 yr*

	Time (hours)	Stage (ft datum)	Rate (ft^3/s)	Volume (ft^3)
Stage				
Minimum	Not Available	Not Available		
Maximum	Not Available	Not Available		
Inflow				
Rate - Maximum - Positive	0.760		7.4994	
Rate - Maximum - Negative	None		None	
Cumulative Volume - Maximum Positive	2.350			15714.9
Cumulative Volume - Maximum Negative	None			None
Cumulative Volume - End of Simulation	2.384			15714.9
Infiltration				
Rate - Maximum - Positive	Not Available		Not Available	
Rate - Maximum - Negative	Not Available		Not Available	
Cumulative Volume - Maximum Positive	Not Available			Not Available
Cumulative Volume - Maximum Negative	Not Available			Not Available
Cumulative Volume - End of Simulation	Not Available			Not Available
Combined Discharge				
Rate - Maximum - Positive	0.760		7.4994	
Rate - Maximum - Negative	None		None	
Cumulative Volume - Maximum Positive	2.350			15714.9
Cumulative Volume - Maximum Negative	None			None
Cumulative Volume - End of Simulation	2.384			15714.9
Discharge Structure 1 - inactive				
Rate - Maximum - Positive	disabled		disabled	
Rate - Maximum - Negative	disabled		disabled	
Cumulative Volume - Maximum Positive	disabled			disabled
Cumulative Volume - Maximum Negative	disabled			disabled
Cumulative Volume - End of Simulation	disabled			disabled
Discharge Structure 2 - inactive				
Rate - Maximum - Positive	disabled		disabled	
Rate - Maximum - Negative	disabled		disabled	
Cumulative Volume - Maximum Positive	disabled			disabled
Cumulative Volume - Maximum Negative	disabled			disabled
Cumulative Volume - End of Simulation	disabled			disabled
Discharge Structure 3 - inactive				
Rate - Maximum - Positive	disabled		disabled	
Rate - Maximum - Negative	disabled		disabled	
Cumulative Volume - Maximum Positive	disabled			disabled
Cumulative Volume - Maximum Negative	disabled			disabled
Cumulative Volume - End of Simulation	disabled			disabled
Pollution Abatement:				
36 Hour Stage and Infiltration Volume	N.A.	N.A.		N.A.
72 Hour Stage and Infiltration Volume	N.A.	N.A.		N.A.

Summary of Results *:: Scenario 2 :: FDOT 2 Hour - 2 hr - 100 yr*

	Time (hours)	Stage (ft datum)	Rate (ft^3/s)	Volume (ft^3)
Stage				
Minimum	Not Available	Not Available		
Maximum	Not Available	Not Available		
Inflow				
Rate - Maximum - Positive	0.898		6.7995	
Rate - Maximum - Negative	None		None	
Cumulative Volume - Maximum Positive	3.352			22519.9
Cumulative Volume - Maximum Negative	None			None
Cumulative Volume - End of Simulation	3.386			22519.9
Infiltration				
Rate - Maximum - Positive	Not Available		Not Available	
Rate - Maximum - Negative	Not Available		Not Available	
Cumulative Volume - Maximum Positive	Not Available			Not Available
Cumulative Volume - Maximum Negative	Not Available			Not Available
Cumulative Volume - End of Simulation	Not Available			Not Available
Combined Discharge				
Rate - Maximum - Positive	0.898		6.7995	
Rate - Maximum - Negative	None		None	
Cumulative Volume - Maximum Positive	3.352			22519.9
Cumulative Volume - Maximum Negative	None			None
Cumulative Volume - End of Simulation	3.386			22519.9
Discharge Structure 1 - inactive				
Rate - Maximum - Positive	disabled		disabled	
Rate - Maximum - Negative	disabled		disabled	
Cumulative Volume - Maximum Positive	disabled			disabled
Cumulative Volume - Maximum Negative	disabled			disabled
Cumulative Volume - End of Simulation	disabled			disabled
Discharge Structure 2 - inactive				
Rate - Maximum - Positive	disabled		disabled	
Rate - Maximum - Negative	disabled		disabled	
Cumulative Volume - Maximum Positive	disabled			disabled
Cumulative Volume - Maximum Negative	disabled			disabled
Cumulative Volume - End of Simulation	disabled			disabled
Discharge Structure 3 - inactive				
Rate - Maximum - Positive	disabled		disabled	
Rate - Maximum - Negative	disabled		disabled	
Cumulative Volume - Maximum Positive	disabled			disabled
Cumulative Volume - Maximum Negative	disabled			disabled
Cumulative Volume - End of Simulation	disabled			disabled
Pollution Abatement:				
36 Hour Stage and Infiltration Volume	N.A.	N.A.		N.A.
72 Hour Stage and Infiltration Volume	N.A.	N.A.		N.A.

Summary of Results *:: Scenario 3 :: FDOT 4 Hour - 4 hr - 100 yr*

	Time (hours)	Stage (ft datum)	Rate (ft^3/s)	Volume (ft^3)
Stage				
Minimum	Not Available	Not Available		
Maximum	Not Available	Not Available		
Inflow				
Rate - Maximum - Positive	2.523		5.2205	
Rate - Maximum - Negative	None		None	
Cumulative Volume - Maximum Positive	5.356			32142.9
Cumulative Volume - Maximum Negative	None			None
Cumulative Volume - End of Simulation	5.391			32142.9
Infiltration				
Rate - Maximum - Positive	Not Available		Not Available	
Rate - Maximum - Negative	Not Available		Not Available	
Cumulative Volume - Maximum Positive	Not Available			Not Available
Cumulative Volume - Maximum Negative	Not Available			Not Available
Cumulative Volume - End of Simulation	Not Available			Not Available
Combined Discharge				
Rate - Maximum - Positive	2.523		5.2205	
Rate - Maximum - Negative	None		None	
Cumulative Volume - Maximum Positive	5.356			32142.9
Cumulative Volume - Maximum Negative	None			None
Cumulative Volume - End of Simulation	5.391			32142.9
Discharge Structure 1 - inactive				
Rate - Maximum - Positive	disabled		disabled	
Rate - Maximum - Negative	disabled		disabled	
Cumulative Volume - Maximum Positive	disabled			disabled
Cumulative Volume - Maximum Negative	disabled			disabled
Cumulative Volume - End of Simulation	disabled			disabled
Discharge Structure 2 - inactive				
Rate - Maximum - Positive	disabled		disabled	
Rate - Maximum - Negative	disabled		disabled	
Cumulative Volume - Maximum Positive	disabled			disabled
Cumulative Volume - Maximum Negative	disabled			disabled
Cumulative Volume - End of Simulation	disabled			disabled
Discharge Structure 3 - inactive				
Rate - Maximum - Positive	disabled		disabled	
Rate - Maximum - Negative	disabled		disabled	
Cumulative Volume - Maximum Positive	disabled			disabled
Cumulative Volume - Maximum Negative	disabled			disabled
Cumulative Volume - End of Simulation	disabled			disabled
Pollution Abatement:				
36 Hour Stage and Infiltration Volume	N.A.	N.A.		N.A.
72 Hour Stage and Infiltration Volume	N.A.	N.A.		N.A.

Summary of Results *:: Scenario 4 :: FDOT 8 Hour - 8 hr - 100 yr*

	Time (hours)	Stage (ft datum)	Rate (ft^3/s)	Volume (ft^3)
Stage				
Minimum	Not Available	Not Available		
Maximum	Not Available	Not Available		
Inflow				
Rate - Maximum - Positive	4.043		6.0489	
Rate - Maximum - Negative	None		None	
Cumulative Volume - Maximum Positive	9.365			41943.3
Cumulative Volume - Maximum Negative	None			None
Cumulative Volume - End of Simulation	9.399			41943.3
Infiltration				
Rate - Maximum - Positive	Not Available		Not Available	
Rate - Maximum - Negative	Not Available		Not Available	
Cumulative Volume - Maximum Positive	Not Available			Not Available
Cumulative Volume - Maximum Negative	Not Available			Not Available
Cumulative Volume - End of Simulation	Not Available			Not Available
Combined Discharge				
Rate - Maximum - Positive	4.043		6.0489	
Rate - Maximum - Negative	None		None	
Cumulative Volume - Maximum Positive	9.365			41943.3
Cumulative Volume - Maximum Negative	None			None
Cumulative Volume - End of Simulation	9.399			41943.3
Discharge Structure 1 - inactive				
Rate - Maximum - Positive	disabled		disabled	
Rate - Maximum - Negative	disabled		disabled	
Cumulative Volume - Maximum Positive	disabled			disabled
Cumulative Volume - Maximum Negative	disabled			disabled
Cumulative Volume - End of Simulation	disabled			disabled
Discharge Structure 2 - inactive				
Rate - Maximum - Positive	disabled		disabled	
Rate - Maximum - Negative	disabled		disabled	
Cumulative Volume - Maximum Positive	disabled			disabled
Cumulative Volume - Maximum Negative	disabled			disabled
Cumulative Volume - End of Simulation	disabled			disabled
Discharge Structure 3 - inactive				
Rate - Maximum - Positive	disabled		disabled	
Rate - Maximum - Negative	disabled		disabled	
Cumulative Volume - Maximum Positive	disabled			disabled
Cumulative Volume - Maximum Negative	disabled			disabled
Cumulative Volume - End of Simulation	disabled			disabled
Pollution Abatement:				
36 Hour Stage and Infiltration Volume	N.A.	N.A.		N.A.
72 Hour Stage and Infiltration Volume	N.A.	N.A.		N.A.

Summary of Results *:: Scenario 5 :: FDOT 24 Hour - 24 hr - 100 yr*

	Time (hours)	Stage (ft datum)	Rate (ft^3/s)	Volume (ft^3)
Stage				
Minimum	Not Available	Not Available		
Maximum	Not Available	Not Available		
Inflow				
Rate - Maximum - Positive	12.025		2.1753	
Rate - Maximum - Negative	None		None	
Cumulative Volume - Maximum Positive	25.364			66329.6
Cumulative Volume - Maximum Negative	None			None
Cumulative Volume - End of Simulation	25.398			66329.6
Infiltration				
Rate - Maximum - Positive	Not Available		Not Available	
Rate - Maximum - Negative	Not Available		Not Available	
Cumulative Volume - Maximum Positive	Not Available			Not Available
Cumulative Volume - Maximum Negative	Not Available			Not Available
Cumulative Volume - End of Simulation	Not Available			Not Available
Combined Discharge				
Rate - Maximum - Positive	12.025		2.1753	
Rate - Maximum - Negative	None		None	
Cumulative Volume - Maximum Positive	25.364			66329.6
Cumulative Volume - Maximum Negative	None			None
Cumulative Volume - End of Simulation	25.398			66329.6
Discharge Structure 1 - inactive				
Rate - Maximum - Positive	disabled		disabled	
Rate - Maximum - Negative	disabled		disabled	
Cumulative Volume - Maximum Positive	disabled			disabled
Cumulative Volume - Maximum Negative	disabled			disabled
Cumulative Volume - End of Simulation	disabled			disabled
Discharge Structure 2 - inactive				
Rate - Maximum - Positive	disabled		disabled	
Rate - Maximum - Negative	disabled		disabled	
Cumulative Volume - Maximum Positive	disabled			disabled
Cumulative Volume - Maximum Negative	disabled			disabled
Cumulative Volume - End of Simulation	disabled			disabled
Discharge Structure 3 - inactive				
Rate - Maximum - Positive	disabled		disabled	
Rate - Maximum - Negative	disabled		disabled	
Cumulative Volume - Maximum Positive	disabled			disabled
Cumulative Volume - Maximum Negative	disabled			disabled
Cumulative Volume - End of Simulation	disabled			disabled
Pollution Abatement:				
36 Hour Stage and Infiltration Volume	N.A.	N.A.		N.A.
72 Hour Stage and Infiltration Volume	N.A.	N.A.		N.A.

Summary of Results *:: Scenario 6 :: FDOT 72 Hour - 72 hr - 100 yr*

	Time (hours)	Stage (ft datum)	Rate (ft^3/s)	Volume (ft^3)
Stage				
Minimum	Not Available	Not Available		
Maximum	Not Available	Not Available		
Inflow				
Rate - Maximum - Positive	59.988		1.5604	
Rate - Maximum - Negative	None		None	
Cumulative Volume - Maximum Positive	73.361			89254.4
Cumulative Volume - Maximum Negative	None			None
Cumulative Volume - End of Simulation	73.396			89254.4
Infiltration				
Rate - Maximum - Positive	Not Available		Not Available	
Rate - Maximum - Negative	Not Available		Not Available	
Cumulative Volume - Maximum Positive	Not Available			Not Available
Cumulative Volume - Maximum Negative	Not Available			Not Available
Cumulative Volume - End of Simulation	Not Available			Not Available
Combined Discharge				
Rate - Maximum - Positive	59.988		1.5604	
Rate - Maximum - Negative	None		None	
Cumulative Volume - Maximum Positive	73.361			89254.4
Cumulative Volume - Maximum Negative	None			None
Cumulative Volume - End of Simulation	73.396			89254.4
Discharge Structure 1 - inactive				
Rate - Maximum - Positive	disabled		disabled	
Rate - Maximum - Negative	disabled		disabled	
Cumulative Volume - Maximum Positive	disabled			disabled
Cumulative Volume - Maximum Negative	disabled			disabled
Cumulative Volume - End of Simulation	disabled			disabled
Discharge Structure 2 - inactive				
Rate - Maximum - Positive	disabled		disabled	
Rate - Maximum - Negative	disabled		disabled	
Cumulative Volume - Maximum Positive	disabled			disabled
Cumulative Volume - Maximum Negative	disabled			disabled
Cumulative Volume - End of Simulation	disabled			disabled
Discharge Structure 3 - inactive				
Rate - Maximum - Positive	disabled		disabled	
Rate - Maximum - Negative	disabled		disabled	
Cumulative Volume - Maximum Positive	disabled			disabled
Cumulative Volume - Maximum Negative	disabled			disabled
Cumulative Volume - End of Simulation	disabled			disabled
Pollution Abatement:				
36 Hour Stage and Infiltration Volume	N.A.	N.A.		N.A.
72 Hour Stage and Infiltration Volume	N.A.	N.A.		N.A.

Summary of Results *:: Scenario 7 :: FDOT 168 Hour - 168 hr - 100 yr*

	Time (hours)	Stage (ft datum)	Rate (ft^3/s)	Volume (ft^3)
Stage				
Minimum	Not Available	Not Available		
Maximum	Not Available	Not Available		
Inflow				
Rate - Maximum - Positive	159.992		1.1048	
Rate - Maximum - Negative	None		None	
Cumulative Volume - Maximum Positive	169.322			107838.0
Cumulative Volume - Maximum Negative	None			None
Cumulative Volume - End of Simulation	169.391			107838.0
Infiltration				
Rate - Maximum - Positive	Not Available		Not Available	
Rate - Maximum - Negative	Not Available		Not Available	
Cumulative Volume - Maximum Positive	Not Available			Not Available
Cumulative Volume - Maximum Negative	Not Available			Not Available
Cumulative Volume - End of Simulation	Not Available			Not Available
Combined Discharge				
Rate - Maximum - Positive	159.992		1.1048	
Rate - Maximum - Negative	None		None	
Cumulative Volume - Maximum Positive	169.322			107838.0
Cumulative Volume - Maximum Negative	None			None
Cumulative Volume - End of Simulation	169.391			107838.0
Discharge Structure 1 - inactive				
Rate - Maximum - Positive	disabled		disabled	
Rate - Maximum - Negative	disabled		disabled	
Cumulative Volume - Maximum Positive	disabled			disabled
Cumulative Volume - Maximum Negative	disabled			disabled
Cumulative Volume - End of Simulation	disabled			disabled
Discharge Structure 2 - inactive				
Rate - Maximum - Positive	disabled		disabled	
Rate - Maximum - Negative	disabled		disabled	
Cumulative Volume - Maximum Positive	disabled			disabled
Cumulative Volume - Maximum Negative	disabled			disabled
Cumulative Volume - End of Simulation	disabled			disabled
Discharge Structure 3 - inactive				
Rate - Maximum - Positive	disabled		disabled	
Rate - Maximum - Negative	disabled		disabled	
Cumulative Volume - Maximum Positive	disabled			disabled
Cumulative Volume - Maximum Negative	disabled			disabled
Cumulative Volume - End of Simulation	disabled			disabled
Pollution Abatement:				
36 Hour Stage and Infiltration Volume	N.A.	N.A.		N.A.
72 Hour Stage and Infiltration Volume	N.A.	N.A.		N.A.

Summary of Results *:: Scenario 8 :: FDOT 240 Hour - 240 hr - 100 yr*

	Time (hours)	Stage (ft datum)	Rate (ft^3/s)	Volume (ft^3)
Stage				
Minimum	Not Available	Not Available		
Maximum	Not Available	Not Available		
Inflow				
Rate - Maximum - Positive	184.008		1.4499	
Rate - Maximum - Negative	None		None	
Cumulative Volume - Maximum Positive	241.301			124892.0
Cumulative Volume - Maximum Negative	None			None
Cumulative Volume - End of Simulation	241.405			124892.0
Infiltration				
Rate - Maximum - Positive	Not Available		Not Available	
Rate - Maximum - Negative	Not Available		Not Available	
Cumulative Volume - Maximum Positive	Not Available			Not Available
Cumulative Volume - Maximum Negative	Not Available			Not Available
Cumulative Volume - End of Simulation	Not Available			Not Available
Combined Discharge				
Rate - Maximum - Positive	184.008		1.4499	
Rate - Maximum - Negative	None		None	
Cumulative Volume - Maximum Positive	241.301			124892.0
Cumulative Volume - Maximum Negative	None			None
Cumulative Volume - End of Simulation	241.405			124892.0
Discharge Structure 1 - inactive				
Rate - Maximum - Positive	disabled		disabled	
Rate - Maximum - Negative	disabled		disabled	
Cumulative Volume - Maximum Positive	disabled			disabled
Cumulative Volume - Maximum Negative	disabled			disabled
Cumulative Volume - End of Simulation	disabled			disabled
Discharge Structure 2 - inactive				
Rate - Maximum - Positive	disabled		disabled	
Rate - Maximum - Negative	disabled		disabled	
Cumulative Volume - Maximum Positive	disabled			disabled
Cumulative Volume - Maximum Negative	disabled			disabled
Cumulative Volume - End of Simulation	disabled			disabled
Discharge Structure 3 - inactive				
Rate - Maximum - Positive	disabled		disabled	
Rate - Maximum - Negative	disabled		disabled	
Cumulative Volume - Maximum Positive	disabled			disabled
Cumulative Volume - Maximum Negative	disabled			disabled
Cumulative Volume - End of Simulation	disabled			disabled
Pollution Abatement:				
36 Hour Stage and Infiltration Volume	N.A.	N.A.		N.A.
72 Hour Stage and Infiltration Volume	N.A.	N.A.		N.A.

Attachment D

Recovery Analysis for WQTV in 72 hrs, 1/2 Volume in 7 days, and Full Volume in 30 days

PONDS Model

PONDS Version 3.2.0239
Retention Pond Recovery - Refined Method
Copyright 2011
Devo Seereeram, Ph.D., P.E.

Project Data

Project Name:	Holiday Inn Alachua
Simulation Description:	Recovery
Project Number:	
Engineer :	
Supervising Engineer:	
Date:	09-29-2016

Aquifer Data

Base Of Aquifer Elevation, [B] (ft datum):	97.75
Water Table Elevation, [WT] (ft datum):	98.00
Horizontal Saturated Hydraulic Conductivity, [Kh] (ft/day):	10.00
Fillable Porosity, [n] (%):	25.00
Unsaturated Vertical Infiltration Rate, [Iv] (ft/day):	7.5
Maximum Area For Unsaturated Infiltration, [Av] (ft^2):	22995.2

Geometry Data

Equivalent Pond Length, [L] (ft):	345.3
Equivalent Pond Width, [W] (ft):	57.0

Ground water mound is expected to intersect the pond bottom

Stage vs Area Data

Stage (ft datum)	Area (ft^2)
102.00	11735.6
103.00	14396.1
103.05	14534.3
104.00	17160.8
105.00	20027.7
106.00	22995.2
107.00	26062.9
108.00	29230.9

Scenario Input Data

Scenario 1 :: 13245 ft³ slug load

Hydrograph Type: Slug Load
Modflow Routing: Routed with infiltration

Treatment Volume (ft³) 13245

Initial ground water level (ft datum) 98.00 (default)

Time After Storm Event (days)	Time After Storm Event (days)
0.100	2.000
0.250	2.500
0.500	3.000
1.000	3.500
1.500	4.000

Worst Case Scenarios

Selection Criteria: <default - All scenarios with valid results>

Maximum Stage = 103.0119 ft datum

For scenario 1 at Time = 1.666667E-03 hours
Scenario Description: 13245 ft^3 slug load

Scenarios considered: 1 to 1

Detailed Results *:: Scenario 1 :: 13245 ft³ slug load*

Elapsed Time (hours)	Inflow Rate (ft³/s)	Outside Recharge (ft/day)	Stage Elevation (ft datum)	Infiltration Rate (ft³/s)	Overflow Discharge (ft³/s)	Cumulative Inflow Volume (ft³)	Cumulative Infiltration Volume (ft³)	Cumulative Discharge Volume (ft³)	Flow Type
0.000	2207.5000	0.0000	98.000	0.00000	0.00000	0.0	0.0	0.0	N.A.
0.002	2207.5000	0.0000	103.012	1.25258	0.00000	13245.0	7.5	0.0	U/P
2.400	0.0000	0.0000	102.260	0.70173	0.00000	13245.0	10102.6	0.0	U/P
6.000	0.0000	0.0000	----	----	----	13245.0	13245.0	0.0	dry
12.000	0.0000	0.0000	----	----	----	13245.0	13245.0	0.0	dry
24.000	0.0000	0.0000	----	----	----	13245.0	13245.0	0.0	dry
36.000	0.0000	0.0000	----	----	----	13245.0	13245.0	0.0	dry
48.000	0.0000	0.0000	----	----	----	13245.0	13245.0	0.0	dry
60.000	0.0000	0.0000	----	----	----	13245.0	13245.0	0.0	dry
72.000	0.0000	0.0000	----	----	----	13245.0	13245.0	0.0	dry
84.000	0.0000	0.0000	----	----	----	13245.0	13245.0	0.0	dry
96.000	0.0000	0.0000	----	----	----	13245.0	13245.0	0.0	dry

Plot of Cumulative Volumes and Pond Stage vs Elapsed Time

Scenario 1 :: 13245 ft³ slug load

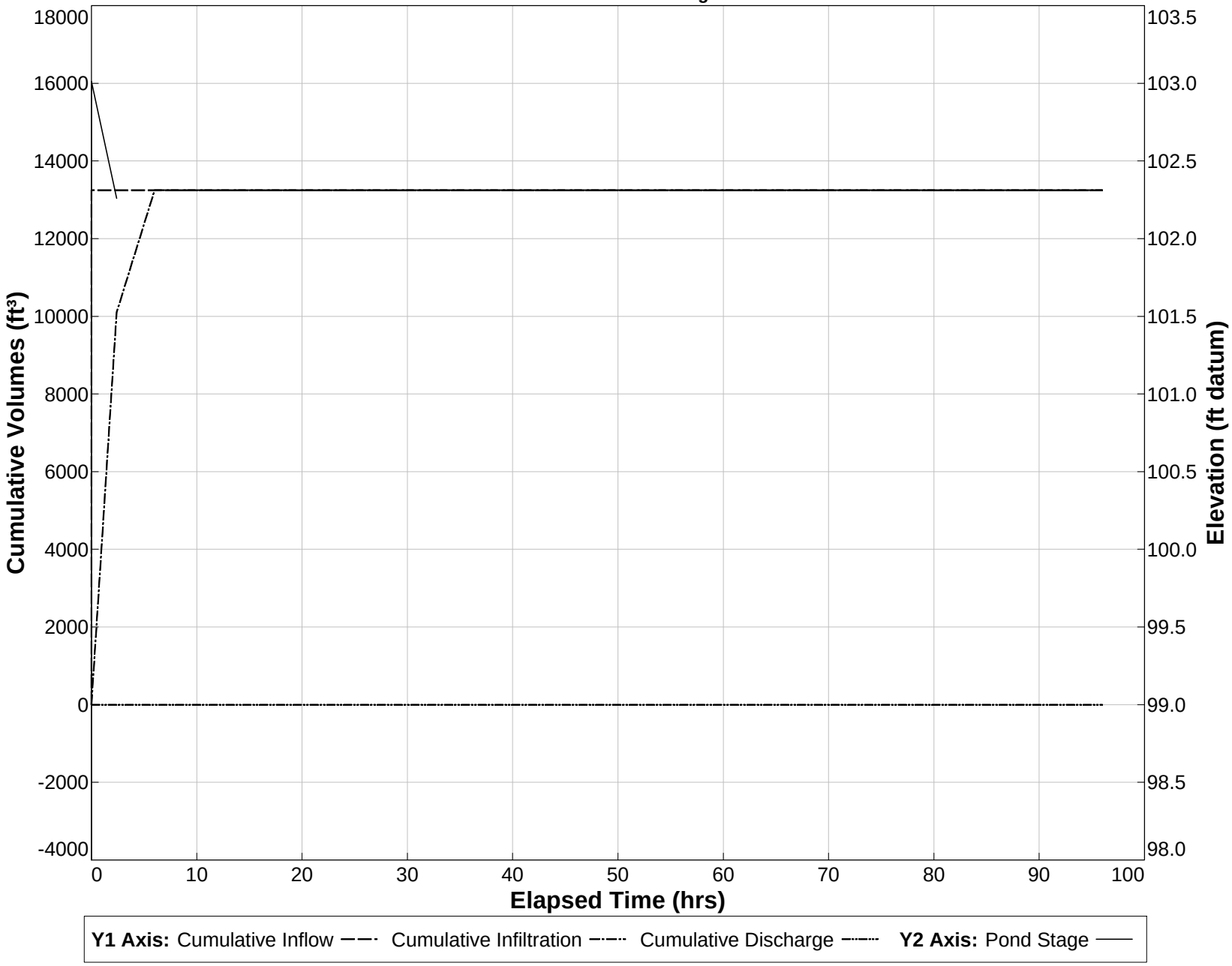

PONDS Version 3.2.0239
Retention Pond Recovery - Refined Method
Copyright 2011
Devo Seereeram, Ph.D., P.E.

PONDS Version 3.2.0239
Retention Pond Recovery - Refined Method
Copyright 2011
Devo Seereeram, Ph.D., P.E.

Project Data

Project Name:	Holiday Inn Alachua
Simulation Description:	Recovery
Project Number:	
Engineer :	
Supervising Engineer:	
Date:	12-05-2016

Aquifer Data

Base Of Aquifer Elevation, [B] (ft datum):	97.95
Water Table Elevation, [WT] (ft datum):	98.00
Horizontal Saturated Hydraulic Conductivity, [Kh] (ft/day):	10.00
Fillable Porosity, [n] (%):	25.00
Unsaturated Vertical Infiltration Rate, [Iv] (ft/day):	22995.16
Maximum Area For Unsaturated Infiltration, [Av] (ft^2):	7.5

Geometry Data

Equivalent Pond Length, [L] (ft):	345.3
Equivalent Pond Width, [W] (ft):	57.0

Ground water mound is expected to intersect the pond bottom

Stage vs Area Data

Stage (ft datum)	Area (ft^2)
102.00	11735.6
103.00	14396.1
103.02	14451.3
104.00	17160.8
105.00	20027.7
106.00	22995.2
107.00	26062.9
108.00	29230.9

Discharge Structures

Discharge Structure #1 is active as orifice

Structure Parameters

Description: Discharge Orifice

Orifice elevation, (ft datum):	105.6667
Orifice coefficient:	4.9
Orifice area, (ft^2):	.0873
Orifice exponent:	.5

Tailwater - disabled, free discharge

Discharge Structure #2 is inactive

Discharge Structure #3 is inactive

Scenario Input Data

Scenario 1 :: FDOT 1 Hour - 1 hr - 100 yr

Hydrograph Type:	Inline SCS
Modflow Routing:	Routed with infiltration
Repetitions:	1

Basin Area (acres)	2.930
Time Of Concentration (minutes)	6.5
DCIA (%)	57.0
Curve Number	71.4
Design Rainfall Depth (inches)	4.4
Design Rainfall Duration (hours)	1.0
Shape Factor	UHG 323
Rainfall Distribution	FDOT 1 Hour

Initial ground water level (ft datum) 98.00 (default)

Time After Storm Event (days)	Time After Storm Event (days)	Time After Storm Event (days)	Time After Storm Event (days)	Time After Storm Event (days)
1.000	8.000	15.000	22.000	29.000
2.000	9.000	16.000	23.000	30.000
3.000	10.000	17.000	24.000	31.000
4.000	11.000	18.000	25.000	
5.000	12.000	19.000	26.000	
6.000	13.000	20.000	27.000	
7.000	14.000	21.000	28.000	

Scenario 2 :: FDOT 2 Hour - 2 hr - 100 yr

Hydrograph Type:	Inline SCS
Modflow Routing:	Routed with infiltration
Repetitions:	1

Basin Area (acres)	2.930
Time Of Concentration (minutes)	6.5
DCIA (%)	57.0
Curve Number	71.4
Design Rainfall Depth (inches)	5.4
Design Rainfall Duration (hours)	2.0
Shape Factor	UHG 323
Rainfall Distribution	FDOT 2 Hour

Initial ground water level (ft datum) 98.00 (default)

Time After Storm Event (days)	Time After Storm Event (days)	Time After Storm Event (days)	Time After Storm Event (days)	Time After Storm Event (days)
1.000	8.000	15.000	22.000	29.000
2.000	9.000	16.000	23.000	30.000
3.000	10.000	17.000	24.000	31.000
4.000	11.000	18.000	25.000	
5.000	12.000	19.000	26.000	
6.000	13.000	20.000	27.000	
7.000	14.000	21.000	28.000	

Scenario Input Data (cont'd.)

Scenario 3 :: FDOT 4 Hour - 4 hr - 100 yr

Hydrograph Type:	Inline SCS
Modflow Routing:	Routed with infiltration
Repetitions:	1

Basin Area (acres)	2.930
Time Of Concentration (minutes)	6.5
DCIA (%)	57.0
Curve Number	71.4
Design Rainfall Depth (inches)	6.7
Design Rainfall Duration (hours)	4.0
Shape Factor	UHG 323
Rainfall Distribution	FDOT 4 Hour

Initial ground water level (ft datum) 98.00 (default)

Time After Storm Event (days)	Time After Storm Event (days)	Time After Storm Event (days)	Time After Storm Event (days)	Time After Storm Event (days)
1.000	8.000	15.000	22.000	29.000
2.000	9.000	16.000	23.000	30.000
3.000	10.000	17.000	24.000	31.000
4.000	11.000	18.000	25.000	
5.000	12.000	19.000	26.000	
6.000	13.000	20.000	27.000	
7.000	14.000	21.000	28.000	

Scenario 4 :: FDOT 8 Hour - 8 hr - 100 yr

Hydrograph Type:	Inline SCS
Modflow Routing:	Routed with infiltration
Repetitions:	1

Basin Area (acres)	2.930
Time Of Concentration (minutes)	6.5
DCIA (%)	57.0
Curve Number	71.4
Design Rainfall Depth (inches)	8.0
Design Rainfall Duration (hours)	8.0
Shape Factor	UHG 323
Rainfall Distribution	FDOT 8 Hour

Initial ground water level (ft datum) 98.00 (default)

Time After Storm Event (days)	Time After Storm Event (days)	Time After Storm Event (days)	Time After Storm Event (days)	Time After Storm Event (days)
1.000	8.000	15.000	22.000	29.000
2.000	9.000	16.000	23.000	30.000
3.000	10.000	17.000	24.000	31.000
4.000	11.000	18.000	25.000	
5.000	12.000	19.000	26.000	
6.000	13.000	20.000	27.000	
7.000	14.000	21.000	28.000	

Scenario Input Data (cont'd.)

Scenario 5 :: FDOT 24 Hour - 24 hr - 100 yr

Hydrograph Type:	Inline SCS
Modflow Routing:	Routed with infiltration
Repetitions:	1

Basin Area (acres)	2.930
Time Of Concentration (minutes)	6.5
DCIA (%)	57.0
Curve Number	71.4
Design Rainfall Depth (inches)	11.0
Design Rainfall Duration (hours)	24.0
Shape Factor	UHG 323
Rainfall Distribution	FDOT 24 Hour

Initial ground water level (ft datum) 98.00 (default)

Time After Storm Event (days)	Time After Storm Event (days)	Time After Storm Event (days)	Time After Storm Event (days)	Time After Storm Event (days)
1.000	8.000	15.000	22.000	29.000
2.000	9.000	16.000	23.000	30.000
3.000	10.000	17.000	24.000	31.000
4.000	11.000	18.000	25.000	
5.000	12.000	19.000	26.000	
6.000	13.000	20.000	27.000	
7.000	14.000	21.000	28.000	

Scenario 6 :: FDOT 72 Hour - 72 hr - 100 yr

Hydrograph Type:	Inline SCS
Modflow Routing:	Routed with infiltration
Repetitions:	1

Basin Area (acres)	2.930
Time Of Concentration (minutes)	6.5
DCIA (%)	57.0
Curve Number	71.4
Design Rainfall Depth (inches)	13.8
Design Rainfall Duration (hours)	72.0
Shape Factor	UHG 323
Rainfall Distribution	FDOT 72 Hour

Initial ground water level (ft datum) 98.00 (default)

Time After Storm Event (days)	Time After Storm Event (days)	Time After Storm Event (days)	Time After Storm Event (days)	Time After Storm Event (days)
1.000	8.000	15.000	22.000	29.000
2.000	9.000	16.000	23.000	30.000
3.000	10.000	17.000	24.000	31.000
4.000	11.000	18.000	25.000	
5.000	12.000	19.000	26.000	
6.000	13.000	20.000	27.000	
7.000	14.000	21.000	28.000	

Scenario Input Data (cont'd.)

Scenario 7 :: FDOT 168 Hour - 168 hr - 100 yr

Hydrograph Type:	Inline SCS
Modflow Routing:	Routed with infiltration
Repetitions:	1

Basin Area (acres)	2.930
Time Of Concentration (minutes)	6.5
DCIA (%)	57.0
Curve Number	71.4
Design Rainfall Depth (inches)	16.0
Design Rainfall Duration (hours)	168.0
Shape Factor	UHG 323
Rainfall Distribution	FDOT 168 Hour

Initial ground water level (ft datum) 98.00 (default)

Time After Storm Event (days)	Time After Storm Event (days)	Time After Storm Event (days)	Time After Storm Event (days)	Time After Storm Event (days)
1.000	8.000	15.000	22.000	29.000
2.000	9.000	16.000	23.000	30.000
3.000	10.000	17.000	24.000	31.000
4.000	11.000	18.000	25.000	
5.000	12.000	19.000	26.000	
6.000	13.000	20.000	27.000	
7.000	14.000	21.000	28.000	

Scenario 8 :: FDOT 240 Hour - 240 hr - 100 yr

Hydrograph Type:	Inline SCS
Modflow Routing:	Routed with infiltration
Repetitions:	1

Basin Area (acres)	2.930
Time Of Concentration (minutes)	6.5
DCIA (%)	57.0
Curve Number	71.4
Design Rainfall Depth (inches)	18.0
Design Rainfall Duration (hours)	240.0
Shape Factor	UHG 323
Rainfall Distribution	FDOT 240 Hour

Initial ground water level (ft datum) 98.00 (default)

Time After Storm Event (days)	Time After Storm Event (days)	Time After Storm Event (days)	Time After Storm Event (days)	Time After Storm Event (days)
1.000	8.000	15.000	22.000	29.000
2.000	9.000	16.000	23.000	30.000
3.000	10.000	17.000	24.000	31.000
4.000	11.000	18.000	25.000	
5.000	12.000	19.000	26.000	
6.000	13.000	20.000	27.000	
7.000	14.000	21.000	28.000	

Worst Case Scenarios

Selection Criteria: <default - All scenarios with valid results>

Maximum Stage = 106.6708 ft datum

For scenario 7 at Time = 160.1602 hours
Scenario Description: FDOT 168 Hour - 168 hr - 100 yr

Scenarios considered: 1 to 8

Detailed Results *:: Scenario 1 :: FDOT 1 Hour - 1 hr - 100 yr*

Elapsed Time (hours)	Inflow Rate (ft³/s)	Outside Recharge (ft/day)	Stage Elevation (ft datum)	Infiltration Rate (ft³/s)	Overflow Discharge (ft³/s)	Cumulative Inflow Volume (ft³)	Cumulative Infiltration Volume (ft³)	Cumulative Discharge Volume (ft³)	Flow Type
0.000	0.0000	0.0000	98.000	0.00000	0.00000	0.0	0.0	0.0	N.A.
0.014	0.0000	0.0000	98.000	0.00000	0.00000	0.0	0.0	0.0	U
0.029	0.0000	0.0000	98.000	0.00000	0.00000	0.0	0.0	0.0	U
0.043	0.0000	0.0000	98.000	0.00017	0.00000	0.0	0.0	0.0	U
0.058	0.0007	0.0000	98.009	0.00143	0.00000	0.0	0.0	0.0	U
0.072	0.0044	0.0000	98.079	0.00597	0.00000	0.1	0.1	0.0	U
0.087	0.0145	0.0000	98.342	0.01747	0.00000	0.6	0.6	0.0	U
0.101	0.0365	0.0000	99.051	0.04419	0.00000	2.0	2.0	0.0	U
0.116	0.0893	0.0000	100.801	0.06278	0.00000	5.3	5.3	0.0	U
0.130	0.1885	0.0000	102.000	0.04160	0.00000	12.5	8.5	0.0	U/S
0.145	0.3526	0.0000	102.001	0.02105	0.00000	26.6	9.6	0.0	S
0.159	0.5892	0.0000	102.003	0.02211	0.00000	51.2	10.7	0.0	S
0.174	0.8665	0.0000	102.007	0.02324	0.00000	89.1	11.9	0.0	S
0.188	1.1613	0.0000	102.011	0.02443	0.00000	142.0	13.1	0.0	S
0.203	1.4607	0.0000	102.017	0.02569	0.00000	210.4	14.4	0.0	S
0.217	1.7976	0.0000	102.024	0.02702	0.00000	295.4	15.8	0.0	S
0.232	2.2026	0.0000	102.033	0.02843	0.00000	399.7	17.3	0.0	S
0.246	2.7105	0.0000	102.043	0.02994	0.00000	527.8	18.8	0.0	S
0.261	3.3146	0.0000	102.056	0.03155	0.00000	685.0	20.4	0.0	S
0.275	3.9234	0.0000	102.072	0.03327	0.00000	873.7	22.1	0.0	S
0.290	4.4994	0.0000	102.090	0.03510	0.00000	1093.4	23.9	0.0	S
0.304	5.0398	0.0000	102.111	0.03707	0.00000	1342.2	25.7	0.0	S
0.319	5.6269	0.0000	102.134	0.03917	0.00000	1620.4	27.7	0.0	S
0.333	6.3369	0.0000	102.159	0.04143	0.00000	1932.4	29.8	0.0	S
0.348	7.2498	0.0000	102.188	0.04386	0.00000	2286.7	32.0	0.0	S
0.362	8.3486	0.0000	102.221	0.04650	0.00000	2693.5	34.4	0.0	S
0.377	9.4901	0.0000	102.258	0.04937	0.00000	3158.8	36.9	0.0	S
0.391	10.6085	0.0000	102.300	0.05248	0.00000	3682.9	39.6	0.0	S
0.406	11.6567	0.0000	102.346	0.05585	0.00000	4263.6	42.4	0.0	S
0.420	12.6369	0.0000	102.396	0.05950	0.00000	4897.2	45.4	0.0	S
0.435	13.5493	0.0000	102.449	0.06347	0.00000	5580.1	48.6	0.0	S
0.449	14.4079	0.0000	102.504	0.06776	0.00000	6309.2	52.0	0.0	S
0.464	15.2182	0.0000	102.563	0.07242	0.00000	7081.9	55.6	0.0	S
0.478	15.9783	0.0000	102.624	0.07746	0.00000	7895.5	59.6	0.0	S
0.493	16.6886	0.0000	102.687	0.08292	0.00000	8747.5	63.7	0.0	S
0.507	17.3315	0.0000	102.751	0.08883	0.00000	9634.7	68.2	0.0	S
0.522	17.8763	0.0000	102.817	0.09522	0.00000	10552.9	73.0	0.0	S
0.536	18.2788	0.0000	102.884	0.10212	0.00000	11495.8	78.1	0.0	S
0.551	18.5232	0.0000	102.952	0.10956	0.00000	12455.6	83.7	0.0	S
0.565	18.6555	0.0000	103.019	0.11756	0.00000	13425.3	89.6	0.0	S
0.580	18.7468	0.0000	103.085	0.12618	0.00000	14400.7	95.9	0.0	S
0.594	18.8335	0.0000	103.152	0.13544	0.00000	15380.8	102.7	0.0	S
0.609	18.8804	0.0000	103.217	0.14540	0.00000	16364.4	110.0	0.0	S
0.623	18.8114	0.0000	103.282	0.15609	0.00000	17347.4	117.9	0.0	S
0.638	18.5498	0.0000	103.345	0.16753	0.00000	18321.8	126.3	0.0	S
0.652	18.0442	0.0000	103.406	0.17974	0.00000	19276.1	135.4	0.0	S
0.666	17.4053	0.0000	103.465	0.19275	0.00000	20200.7	145.1	0.0	S
0.681	16.7610	0.0000	103.521	0.20659	0.00000	21091.7	155.5	0.0	S
0.695	16.1801	0.0000	103.574	0.22129	0.00000	21950.8	166.6	0.0	S
0.710	15.6499	0.0000	103.625	0.23690	0.00000	22781.0	178.6	0.0	S
0.724	15.1216	0.0000	103.674	0.25344	0.00000	23583.5	191.3	0.0	S
0.739	14.5435	0.0000	103.720	0.27093	0.00000	24357.1	205.0	0.0	S
0.753	13.8757	0.0000	103.765	0.28938	0.00000	25098.3	219.6	0.0	S
0.768	13.1861	0.0000	103.806	0.30879	0.00000	25804.1	235.2	0.0	S
0.782	12.5334	0.0000	103.845	0.32917	0.00000	26474.8	251.8	0.0	S
0.797	11.9526	0.0000	103.882	0.35053	0.00000	27113.4	269.5	0.0	S
0.811	11.3790	0.0000	103.917	0.37284	0.00000	27721.9	288.4	0.0	S
0.826	10.7513	0.0000	103.950	0.39607	0.00000	28299.1	308.4	0.0	S
0.840	9.9975	0.0000	103.981	0.42015	0.00000	28840.2	329.7	0.0	S
0.855	9.0710	0.0000	104.008	0.44496	0.00000	29337.5	352.3	0.0	S
0.869	8.1081	0.0000	104.033	0.47042	0.00000	29785.6	376.1	0.0	S
0.884	7.1936	0.0000	104.055	0.49641	0.00000	30184.6	401.3	0.0	S
0.898	6.3830	0.0000	104.073	0.52284	0.00000	30538.7	427.9	0.0	S
0.913	5.6745	0.0000	104.090	0.54960	0.00000	30853.2	455.9	0.0	S
0.927	5.0571	0.0000	104.104	0.57657	0.00000	31133.0	485.2	0.0	S
0.942	4.5116	0.0000	104.117	0.60360	0.00000	31382.6	516.0	0.0	S
0.956	4.0183	0.0000	104.128	0.63054	0.00000	31605.0	548.2	0.0	S
0.971	3.5778	0.0000	104.137	0.65722	0.00000	31803.2	581.8	0.0	S
0.985	3.1861	0.0000	104.145	0.68347	0.00000	31979.6	616.8	0.0	S
1.000	2.8424	0.0000	104.152	0.70909	0.00000	32136.8	653.1	0.0	S
1.014	2.5250	0.0000	104.158	0.73388	0.00000	32276.8	690.7	0.0	S
1.029	2.2396	0.0000	104.163	0.75766	0.00000	32401.0	729.7	0.0	S
1.043	1.9718	0.0000	104.167	0.78020	0.00000	32510.8	769.8	0.0	S
1.058	1.7132	0.0000	104.170	0.80131	0.00000	32607.0	811.0	0.0	S

Detailed Results (cont,d.) *:: Scenario 1 :: FDOT 1 Hour - 1 hr - 100 yr*

Elapsed Time (hours)	Inflow Rate (ft³/s)	Outside Recharge (ft/day)	Stage Elevation (ft datum)	Infiltration Rate (ft³/s)	Overflow Discharge (ft³/s)	Cumulative Inflow Volume (ft³)	Cumulative Infiltration Volume (ft³)	Cumulative Discharge Volume (ft³)	Flow Type
1.072	1.4768	0.0000	104.172	0.82078	0.00000	32690.1	853.4	0.0	S
1.087	1.2649	0.0000	104.174	0.83844	0.00000	32761.6	896.7	0.0	S
1.101	1.0792	0.0000	104.175	0.85413	0.00000	32822.8	940.8	0.0	S
1.116	0.9177	0.0000	104.175	0.86769	0.00000	32874.9	985.8	0.0	S
1.130	0.7786	0.0000	104.175	0.87901	0.00000	32919.1	1031.4	0.0	S
1.145	0.6588	0.0000	104.174	0.88799	0.00000	32956.6	1077.5	0.0	S
1.159	0.5558	0.0000	104.174	0.89454	0.00000	32988.3	1124.0	0.0	S
1.174	0.4682	0.0000	104.172	0.89862	0.00000	33015.0	1170.8	0.0	S
1.188	0.3925	0.0000	104.171	0.90022	0.00000	33037.4	1217.7	0.0	S
1.203	0.3268	0.0000	104.169	0.89934	0.00000	33056.2	1264.7	0.0	S
1.217	0.2695	0.0000	104.168	0.89604	0.00000	33071.7	1311.6	0.0	S
1.232	0.2215	0.0000	104.166	0.89037	0.00000	33084.5	1358.2	0.0	S
1.246	0.1804	0.0000	104.164	0.88242	0.00000	33095.0	1404.4	0.0	S
1.261	0.1455	0.0000	104.162	0.87233	0.00000	33103.5	1450.2	0.0	S
1.275	0.1166	0.0000	104.159	0.86022	0.00000	33110.3	1495.4	0.0	S
1.290	0.0928	0.0000	104.157	0.84625	0.00000	33115.8	1540.0	0.0	S
1.304	0.0731	0.0000	104.155	0.83059	0.00000	33120.1	1583.7	0.0	S
1.318	0.0574	0.0000	104.153	0.81344	0.00000	33123.5	1626.6	0.0	S
1.333	0.0447	0.0000	104.150	0.79498	0.00000	33126.2	1668.6	0.0	S
1.347	0.0347	0.0000	104.148	0.77541	0.00000	33128.3	1709.5	0.0	S
1.362	0.0271	0.0000	104.146	0.75493	0.00000	33129.9	1749.5	0.0	S
1.376	0.0217	0.0000	104.144	0.73374	0.00000	33131.2	1788.3	0.0	S
1.391	0.0173	0.0000	104.142	0.71202	0.00000	33132.2	1826.0	0.0	S
1.405	0.0136	0.0000	104.140	0.68996	0.00000	33133.0	1862.6	0.0	S
1.420	0.0105	0.0000	104.138	0.66775	0.00000	33133.6	1898.0	0.0	S
1.434	0.0080	0.0000	104.136	0.64553	0.00000	33134.1	1932.2	0.0	S
1.449	0.0059	0.0000	104.134	0.62348	0.00000	33134.5	1965.3	0.0	S
1.463	0.0042	0.0000	104.132	0.60173	0.00000	33134.7	1997.3	0.0	S
1.478	0.0030	0.0000	104.130	0.58041	0.00000	33134.9	2028.1	0.0	S
1.492	0.0020	0.0000	104.129	0.55964	0.00000	33135.0	2057.8	0.0	S
1.507	0.0012	0.0000	104.127	0.53951	0.00000	33135.1	2086.5	0.0	S
1.521	0.0007	0.0000	104.126	0.52013	0.00000	33135.2	2114.1	0.0	S
1.536	0.0004	0.0000	104.124	0.50156	0.00000	33135.2	2140.7	0.0	S
1.550	0.0001	0.0000	104.123	0.48388	0.00000	33135.2	2166.4	0.0	S
1.565	0.0000	0.0000	104.121	0.46712	0.00000	33135.2	2191.2	0.0	S
1.579	0.0000	0.0000	104.120	0.45133	0.00000	33135.2	2215.2	0.0	S
1.594	0.0000	0.0000	104.118	0.44350	0.00000	33135.2	2238.3	0.0	S
25.594	0.0000	0.0000	103.425	0.09774	0.00000	33135.2	13704.0	0.0	S
49.594	0.0000	0.0000	103.065	0.05232	0.00000	33135.2	19128.0	0.0	S
73.594	0.0000	0.0000	102.811	0.03677	0.00000	33135.2	22744.6	0.0	S
97.594	0.0000	0.0000	102.610	0.02860	0.00000	33135.2	25482.4	0.0	S
121.594	0.0000	0.0000	102.442	0.02343	0.00000	33135.2	27687.5	0.0	S
145.594	0.0000	0.0000	102.297	0.01980	0.00000	33135.2	29530.4	0.0	S
169.594	0.0000	0.0000	102.169	0.01710	0.00000	33135.2	31109.1	0.0	S
193.594	0.0000	0.0000	102.055	0.01173	0.00000	33135.2	32485.8	0.0	S
217.594	0.0000	0.0000	101.908	0.00376	0.00000	33135.2	33135.2	0.0	S
241.594	0.0000	0.0000	101.740	0.00000	0.00000	33135.2	33135.2	0.0	S
265.594	0.0000	0.0000	101.599	0.00000	0.00000	33135.2	33135.2	0.0	S
289.594	0.0000	0.0000	101.478	0.00000	0.00000	33135.2	33135.2	0.0	S
313.594	0.0000	0.0000	101.371	0.00000	0.00000	33135.2	33135.2	0.0	S
337.594	0.0000	0.0000	101.276	0.00000	0.00000	33135.2	33135.2	0.0	S
361.594	0.0000	0.0000	101.191	0.00000	0.00000	33135.2	33135.2	0.0	S
385.594	0.0000	0.0000	101.113	0.00000	0.00000	33135.2	33135.2	0.0	S
409.594	0.0000	0.0000	101.042	0.00000	0.00000	33135.2	33135.2	0.0	S
433.594	0.0000	0.0000	100.977	0.00000	0.00000	33135.2	33135.2	0.0	S
457.594	0.0000	0.0000	100.916	0.00000	0.00000	33135.2	33135.2	0.0	S
481.594	0.0000	0.0000	100.859	0.00000	0.00000	33135.2	33135.2	0.0	S
505.594	0.0000	0.0000	100.807	0.00000	0.00000	33135.2	33135.2	0.0	S
529.594	0.0000	0.0000	100.758	0.00000	0.00000	33135.2	33135.2	0.0	S
553.594	0.0000	0.0000	100.711	0.00000	0.00000	33135.2	33135.2	0.0	S
577.594	0.0000	0.0000	100.667	0.00000	0.00000	33135.2	33135.2	0.0	S
601.594	0.0000	0.0000	100.626	0.00000	0.00000	33135.2	33135.2	0.0	S
625.594	0.0000	0.0000	100.587	0.00000	0.00000	33135.2	33135.2	0.0	S
649.594	0.0000	0.0000	100.550	0.00000	0.00000	33135.2	33135.2	0.0	S
673.594	0.0000	0.0000	100.515	0.00000	0.00000	33135.2	33135.2	0.0	S
697.594	0.0000	0.0000	100.481	0.00000	0.00000	33135.2	33135.2	0.0	S
721.594	0.0000	0.0000	100.449	0.00000	0.00000	33135.2	33135.2	0.0	S
745.594	0.0000	0.0000	100.418	----	----	33135.2	33135.2	0.0	N.A.

Plot of Cumulative Volumes and Pond Stage vs Elapsed Time

Scenario 1 :: FDOT 1 Hour - 1 hr - 100 yr

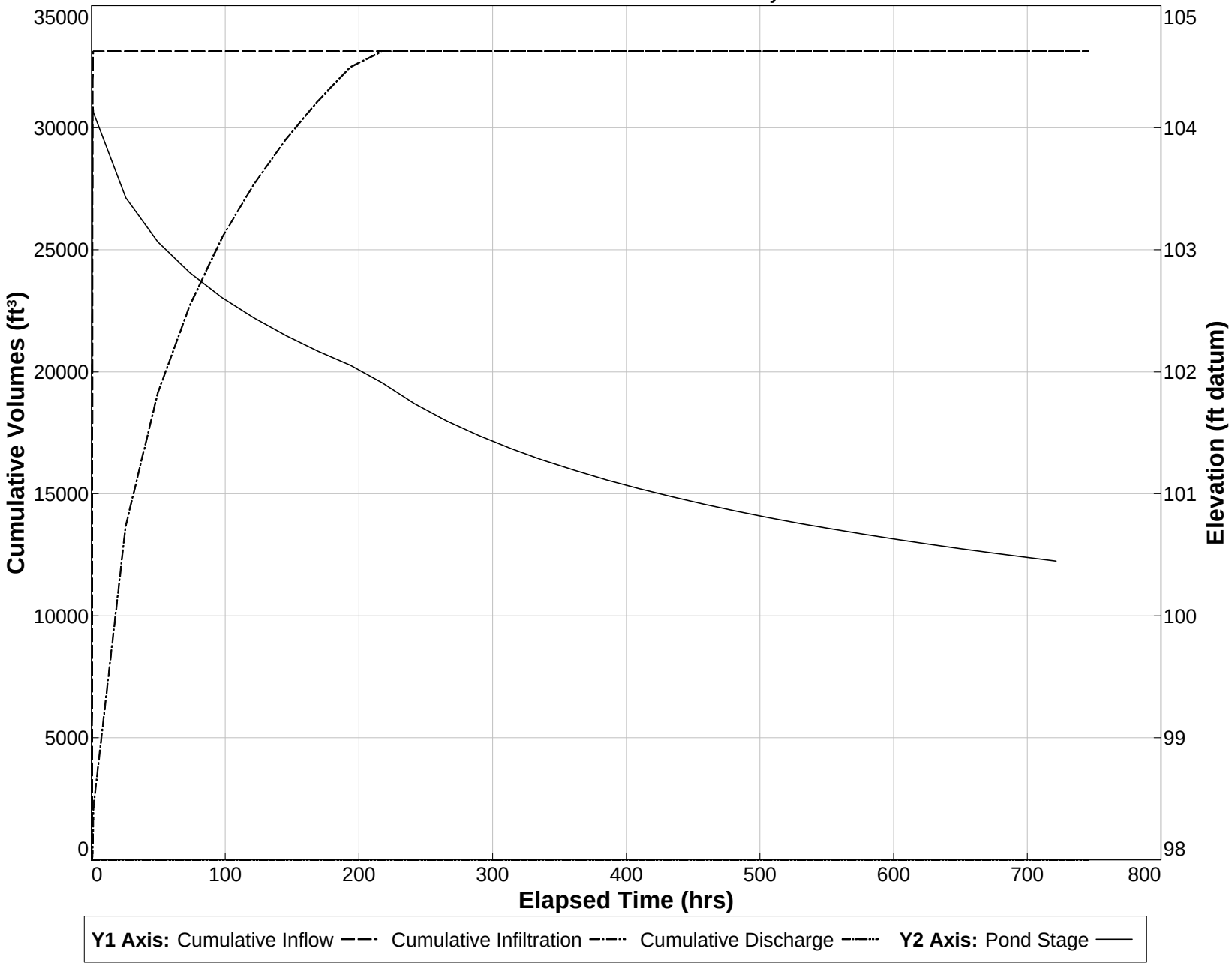

Detailed Results (cont,d.) *:: Scenario 2 :: FDOT 2 Hour - 2 hr - 100 yr*

Elapsed Time (hours)	Inflow Rate (ft³/s)	Outside Recharge (ft/day)	Stage Elevation (ft datum)	Infiltration Rate (ft³/s)	Overflow Discharge (ft³/s)	Cumulative Inflow Volume (ft³)	Cumulative Infiltration Volume (ft³)	Cumulative Discharge Volume (ft³)	Flow Type
2.144	0.5357	0.0000	104.580	0.48658	0.00000	42479.5	3196.3	0.0	S
2.159	0.4684	0.0000	104.580	0.48867	0.00000	42505.6	3221.8	0.0	S
2.173	0.4102	0.0000	104.580	0.49051	0.00000	42528.6	3247.3	0.0	S
2.188	0.3592	0.0000	104.580	0.49211	0.00000	42548.6	3272.9	0.0	S
2.202	0.3147	0.0000	104.579	0.49345	0.00000	42566.2	3298.6	0.0	S
2.217	0.2729	0.0000	104.579	0.49454	0.00000	42581.5	3324.4	0.0	S
2.231	0.2378	0.0000	104.578	0.49538	0.00000	42594.9	3350.2	0.0	S
2.246	0.2067	0.0000	104.577	0.49596	0.00000	42606.4	3376.1	0.0	S
2.260	0.1790	0.0000	104.577	0.49630	0.00000	42616.5	3402.0	0.0	S
2.275	0.1544	0.0000	104.576	0.49639	0.00000	42625.2	3427.9	0.0	S
2.289	0.1326	0.0000	104.575	0.49623	0.00000	42632.7	3453.8	0.0	S
2.304	0.1133	0.0000	104.574	0.49583	0.00000	42639.1	3479.6	0.0	S
2.318	0.0963	0.0000	104.573	0.49519	0.00000	42644.6	3505.5	0.0	S
2.333	0.0813	0.0000	104.571	0.49432	0.00000	42649.2	3531.3	0.0	S
2.347	0.0682	0.0000	104.570	0.49323	0.00000	42653.1	3557.1	0.0	S
2.362	0.0568	0.0000	104.569	0.49192	0.00000	42656.4	3582.7	0.0	S
2.376	0.0472	0.0000	104.568	0.49041	0.00000	42659.1	3608.4	0.0	S
2.391	0.0387	0.0000	104.567	0.48869	0.00000	42661.3	3633.9	0.0	S
2.405	0.0312	0.0000	104.565	0.48677	0.00000	42663.1	3659.4	0.0	S
2.420	0.0247	0.0000	104.564	0.48467	0.00000	42664.6	3684.7	0.0	S
2.434	0.0194	0.0000	104.563	0.48240	0.00000	42665.7	3709.9	0.0	S
2.449	0.0147	0.0000	104.562	0.47995	0.00000	42666.6	3735.0	0.0	S
2.463	0.0108	0.0000	104.560	0.47735	0.00000	42667.3	3760.0	0.0	S
2.478	0.0076	0.0000	104.559	0.47460	0.00000	42667.8	3784.8	0.0	S
2.492	0.0051	0.0000	104.558	0.47172	0.00000	42668.1	3809.5	0.0	S
2.507	0.0032	0.0000	104.556	0.46870	0.00000	42668.3	3834.0	0.0	S
2.521	0.0019	0.0000	104.555	0.46557	0.00000	42668.5	3858.4	0.0	S
2.536	0.0009	0.0000	104.554	0.46232	0.00000	42668.5	3882.6	0.0	S
2.550	0.0003	0.0000	104.552	0.45898	0.00000	42668.6	3906.6	0.0	S
2.565	0.0000	0.0000	104.551	0.45555	0.00000	42668.6	3930.5	0.0	S
2.579	0.0000	0.0000	104.550	0.45204	0.00000	42668.6	3954.1	0.0	S
2.594	0.0000	0.0000	104.549	0.45008	0.00000	42668.6	3977.6	0.0	S
26.594	0.0000	0.0000	103.882	0.10374	0.00000	42668.6	15836.8	0.0	S
50.594	0.0000	0.0000	103.510	0.05891	0.00000	42668.6	21903.5	0.0	S
74.594	0.0000	0.0000	103.243	0.04196	0.00000	42668.6	26016.9	0.0	S
98.594	0.0000	0.0000	103.031	0.03284	0.00000	42668.6	29153.3	0.0	S
122.594	0.0000	0.0000	102.853	0.02701	0.00000	42668.6	31691.2	0.0	S
146.594	0.0000	0.0000	102.699	0.02290	0.00000	42668.6	33819.9	0.0	S
170.594	0.0000	0.0000	102.562	0.01984	0.00000	42668.6	35648.8	0.0	S
194.594	0.0000	0.0000	102.440	0.01745	0.00000	42668.6	37247.5	0.0	S
218.594	0.0000	0.0000	102.329	0.01553	0.00000	42668.6	38663.4	0.0	S
242.594	0.0000	0.0000	102.228	0.01395	0.00000	42668.6	39930.4	0.0	S
266.594	0.0000	0.0000	102.134	0.01263	0.00000	42668.6	41073.8	0.0	S
290.594	0.0000	0.0000	102.047	0.00923	0.00000	42668.6	42113.1	0.0	S
314.594	0.0000	0.0000	101.936	0.00321	0.00000	42668.6	42668.6	0.0	S
338.594	0.0000	0.0000	101.800	0.00000	0.00000	42668.6	42668.6	0.0	S
362.594	0.0000	0.0000	101.683	0.00000	0.00000	42668.6	42668.6	0.0	S
386.594	0.0000	0.0000	101.581	0.00000	0.00000	42668.6	42668.6	0.0	S
410.594	0.0000	0.0000	101.489	0.00000	0.00000	42668.6	42668.6	0.0	S
434.594	0.0000	0.0000	101.406	0.00000	0.00000	42668.6	42668.6	0.0	S
458.594	0.0000	0.0000	101.329	0.00000	0.00000	42668.6	42668.6	0.0	S
482.594	0.0000	0.0000	101.259	0.00000	0.00000	42668.6	42668.6	0.0	S
506.594	0.0000	0.0000	101.194	0.00000	0.00000	42668.6	42668.6	0.0	S
530.594	0.0000	0.0000	101.134	0.00000	0.00000	42668.6	42668.6	0.0	S
554.594	0.0000	0.0000	101.077	0.00000	0.00000	42668.6	42668.6	0.0	S
578.594	0.0000	0.0000	101.024	0.00000	0.00000	42668.6	42668.6	0.0	S
602.594	0.0000	0.0000	100.975	0.00000	0.00000	42668.6	42668.6	0.0	S
626.594	0.0000	0.0000	100.928	0.00000	0.00000	42668.6	42668.6	0.0	S
650.594	0.0000	0.0000	100.883	0.00000	0.00000	42668.6	42668.6	0.0	S
674.594	0.0000	0.0000	100.841	0.00000	0.00000	42668.6	42668.6	0.0	S
698.594	0.0000	0.0000	100.801	0.00000	0.00000	42668.6	42668.6	0.0	S
722.594	0.0000	0.0000	100.763	0.00000	0.00000	42668.6	42668.6	0.0	S
746.594	0.0000	0.0000	100.726	----	----	42668.6	42668.6	0.0	N.A.

Plot of Cumulative Volumes and Pond Stage vs Elapsed Time

Scenario 2 :: FDOT 2 Hour - 2 hr - 100 yr

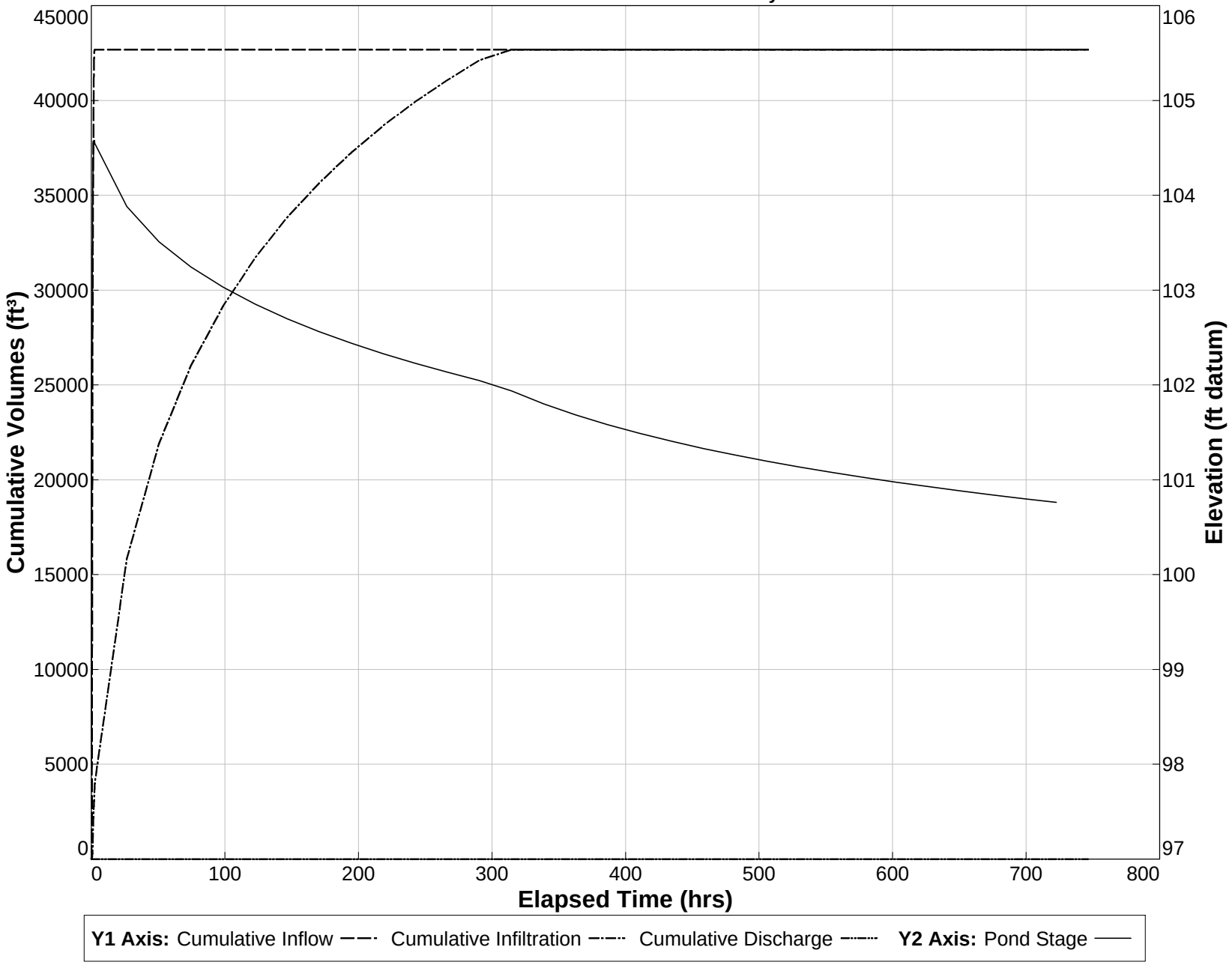

Detailed Results (cont,d.) *:: Scenario 3 :: FDOT 4 Hour - 4 hr - 100 yr*

Elapsed Time (hours)	Inflow Rate (ft³/s)	Outside Recharge (ft/day)	Stage Elevation (ft datum)	Infiltration Rate (ft³/s)	Overflow Discharge (ft³/s)	Cumulative Inflow Volume (ft³)	Cumulative Infiltration Volume (ft³)	Cumulative Discharge Volume (ft³)	Flow Type
3.217	2.4307	0.0000	104.977	0.53762	0.00000	51299.2	4318.8	0.0	S
3.231	2.3574	0.0000	104.982	0.53313	0.00000	51424.0	4346.7	0.0	S
3.246	2.2923	0.0000	104.987	0.52866	0.00000	51545.3	4374.4	0.0	S
3.260	2.2341	0.0000	104.991	0.52423	0.00000	51663.4	4401.9	0.0	S
3.274	2.1822	0.0000	104.996	0.51986	0.00000	51778.5	4429.1	0.0	S
3.289	2.1359	0.0000	105.000	0.51555	0.00000	51891.2	4456.1	0.0	S
3.303	2.0946	0.0000	105.004	0.51131	0.00000	52001.5	4482.9	0.0	S
3.318	2.0579	0.0000	105.008	0.50716	0.00000	52109.8	4509.4	0.0	S
3.332	2.0251	0.0000	105.012	0.50310	0.00000	52216.3	4535.8	0.0	S
3.347	1.9963	0.0000	105.016	0.49915	0.00000	52321.1	4561.9	0.0	S
3.361	1.9711	0.0000	105.020	0.49530	0.00000	52424.6	4587.8	0.0	S
3.376	1.9495	0.0000	105.024	0.49156	0.00000	52526.9	4613.6	0.0	S
3.390	1.9303	0.0000	105.027	0.48795	0.00000	52628.0	4639.1	0.0	S
3.405	1.9136	0.0000	105.031	0.48446	0.00000	52728.3	4664.5	0.0	S
3.419	1.8992	0.0000	105.035	0.48110	0.00000	52827.7	4689.7	0.0	S
3.434	1.8872	0.0000	105.039	0.47787	0.00000	52926.5	4714.7	0.0	S
3.448	1.8769	0.0000	105.042	0.47478	0.00000	53024.6	4739.5	0.0	S
3.463	1.8682	0.0000	105.046	0.47183	0.00000	53122.3	4764.2	0.0	S
3.477	1.8612	0.0000	105.049	0.46902	0.00000	53219.6	4788.7	0.0	S
3.492	1.8558	0.0000	105.053	0.46635	0.00000	53316.5	4813.1	0.0	S
3.506	1.8459	0.0000	105.057	0.46382	0.00000	53413.1	4837.4	0.0	S
3.521	1.8203	0.0000	105.060	0.46139	0.00000	53508.7	4861.5	0.0	S
3.535	1.7685	0.0000	105.064	0.45903	0.00000	53602.3	4885.5	0.0	S
3.550	1.6830	0.0000	105.067	0.45671	0.00000	53692.3	4909.4	0.0	S
3.564	1.5750	0.0000	105.070	0.45440	0.00000	53777.3	4933.2	0.0	S
3.579	1.4667	0.0000	105.073	0.45209	0.00000	53856.6	4956.8	0.0	S
3.593	1.3674	0.0000	105.075	0.44982	0.00000	53930.5	4980.3	0.0	S
3.608	1.2822	0.0000	105.077	0.44758	0.00000	53999.6	5003.7	0.0	S
3.622	1.2104	0.0000	105.079	0.44541	0.00000	54064.6	5027.0	0.0	S
3.637	1.1500	0.0000	105.081	0.44332	0.00000	54126.2	5050.2	0.0	S
3.651	1.0989	0.0000	105.083	0.44132	0.00000	54184.8	5073.3	0.0	S
3.666	1.0550	0.0000	105.085	0.43942	0.00000	54241.0	5096.2	0.0	S
3.680	1.0168	0.0000	105.086	0.43762	0.00000	54295.0	5119.1	0.0	S
3.695	0.9834	0.0000	105.088	0.43593	0.00000	54347.2	5141.9	0.0	S
3.709	0.9532	0.0000	105.089	0.43433	0.00000	54397.7	5164.6	0.0	S
3.724	0.9260	0.0000	105.090	0.43284	0.00000	54446.7	5187.2	0.0	S
3.738	0.9027	0.0000	105.092	0.43144	0.00000	54494.4	5209.7	0.0	S
3.753	0.8819	0.0000	105.093	0.43014	0.00000	54540.9	5232.2	0.0	S
3.767	0.8633	0.0000	105.094	0.42894	0.00000	54586.5	5254.6	0.0	S
3.782	0.8467	0.0000	105.095	0.42782	0.00000	54631.0	5276.9	0.0	S
3.796	0.8319	0.0000	105.096	0.42678	0.00000	54674.8	5299.2	0.0	S
3.811	0.8187	0.0000	105.097	0.42583	0.00000	54717.9	5321.5	0.0	S
3.825	0.8070	0.0000	105.098	0.42495	0.00000	54760.3	5343.7	0.0	S
3.840	0.7965	0.0000	105.099	0.42413	0.00000	54802.1	5365.8	0.0	S
3.854	0.7874	0.0000	105.100	0.42338	0.00000	54843.4	5387.9	0.0	S
3.869	0.7795	0.0000	105.101	0.42269	0.00000	54884.3	5410.0	0.0	S
3.883	0.7726	0.0000	105.102	0.42205	0.00000	54924.7	5432.0	0.0	S
3.898	0.7665	0.0000	105.103	0.42146	0.00000	54964.9	5454.0	0.0	S
3.912	0.7612	0.0000	105.104	0.42091	0.00000	55004.7	5476.0	0.0	S
3.926	0.7567	0.0000	105.104	0.42039	0.00000	55044.3	5497.9	0.0	S
3.941	0.7529	0.0000	105.105	0.41992	0.00000	55083.7	5519.8	0.0	S
3.955	0.7496	0.0000	105.106	0.41946	0.00000	55122.9	5541.7	0.0	S
3.970	0.7469	0.0000	105.107	0.41904	0.00000	55161.9	5563.6	0.0	S
3.984	0.7448	0.0000	105.108	0.41863	0.00000	55200.8	5585.4	0.0	S
3.999	0.7431	0.0000	105.109	0.41823	0.00000	55239.6	5607.2	0.0	S
4.013	0.7337	0.0000	105.110	0.41783	0.00000	55278.1	5629.1	0.0	S
4.028	0.7103	0.0000	105.110	0.41740	0.00000	55315.8	5650.8	0.0	S
4.042	0.6656	0.0000	105.111	0.41691	0.00000	55351.7	5672.6	0.0	S
4.057	0.5969	0.0000	105.112	0.41634	0.00000	55384.6	5694.3	0.0	S
4.071	0.5232	0.0000	105.112	0.41567	0.00000	55413.8	5716.0	0.0	S
4.086	0.4523	0.0000	105.112	0.41491	0.00000	55439.2	5737.7	0.0	S
4.100	0.3905	0.0000	105.112	0.41408	0.00000	55461.2	5759.3	0.0	S
4.115	0.3382	0.0000	105.112	0.41318	0.00000	55480.2	5780.9	0.0	S
4.129	0.2941	0.0000	105.112	0.41224	0.00000	55496.7	5802.4	0.0	S
4.144	0.2571	0.0000	105.111	0.41125	0.00000	55511.1	5823.9	0.0	S
4.158	0.2255	0.0000	105.111	0.41022	0.00000	55523.7	5845.3	0.0	S
4.173	0.1982	0.0000	105.110	0.40916	0.00000	55534.7	5866.7	0.0	S
4.187	0.1742	0.0000	105.110	0.40808	0.00000	55544.4	5888.0	0.0	S
4.202	0.1533	0.0000	105.109	0.40697	0.00000	55553.0	5909.3	0.0	S
4.216	0.1336	0.0000	105.109	0.40584	0.00000	55560.5	5930.5	0.0	S
4.231	0.1169	0.0000	105.108	0.40468	0.00000	55567.0	5951.6	0.0	S
4.245	0.1022	0.0000	105.107	0.40351	0.00000	55572.7	5972.7	0.0	S
4.260	0.0890	0.0000	105.106	0.40231	0.00000	55577.7	5993.7	0.0	S
4.274	0.0772	0.0000	105.106	0.40109	0.00000	55582.0	6014.6	0.0	S

Detailed Results (cont,d.) *:: Scenario 3 :: FDOT 4 Hour - 4 hr - 100 yr*

Elapsed Time (hours)	Inflow Rate (ft³/s)	Outside Recharge (ft/day)	Stage Elevation (ft datum)	Infiltration Rate (ft³/s)	Overflow Discharge (ft³/s)	Cumulative Inflow Volume (ft³)	Cumulative Infiltration Volume (ft³)	Cumulative Discharge Volume (ft³)	Flow Type
4.289	0.0667	0.0000	105.105	0.39986	0.00000	55585.8	6035.5	0.0	S
4.303	0.0573	0.0000	105.104	0.39860	0.00000	55589.0	6056.4	0.0	S
4.318	0.0490	0.0000	105.103	0.39733	0.00000	55591.8	6077.1	0.0	S
4.332	0.0415	0.0000	105.102	0.39604	0.00000	55594.1	6097.8	0.0	S
4.347	0.0350	0.0000	105.101	0.39473	0.00000	55596.1	6118.4	0.0	S
4.361	0.0292	0.0000	105.100	0.39341	0.00000	55597.8	6139.0	0.0	S
4.376	0.0243	0.0000	105.099	0.39207	0.00000	55599.2	6159.5	0.0	S
4.390	0.0199	0.0000	105.098	0.39071	0.00000	55600.4	6179.9	0.0	S
4.405	0.0161	0.0000	105.097	0.38934	0.00000	55601.3	6200.2	0.0	S
4.419	0.0128	0.0000	105.096	0.38796	0.00000	55602.1	6220.5	0.0	S
4.434	0.0100	0.0000	105.095	0.38656	0.00000	55602.6	6240.7	0.0	S
4.448	0.0076	0.0000	105.094	0.38515	0.00000	55603.1	6260.8	0.0	S
4.463	0.0056	0.0000	105.093	0.38373	0.00000	55603.5	6280.9	0.0	S
4.477	0.0039	0.0000	105.093	0.38229	0.00000	55603.7	6300.9	0.0	S
4.492	0.0026	0.0000	105.092	0.38085	0.00000	55603.9	6320.8	0.0	S
4.506	0.0017	0.0000	105.091	0.37940	0.00000	55604.0	6340.6	0.0	S
4.521	0.0010	0.0000	105.090	0.37793	0.00000	55604.1	6360.3	0.0	S
4.535	0.0005	0.0000	105.089	0.37647	0.00000	55604.1	6380.0	0.0	S
4.550	0.0002	0.0000	105.088	0.37499	0.00000	55604.1	6399.6	0.0	S
4.564	0.0000	0.0000	105.087	0.37351	0.00000	55604.1	6419.1	0.0	S
4.578	0.0000	0.0000	105.086	0.37203	0.00000	55604.1	6438.6	0.0	S
4.593	0.0000	0.0000	105.085	0.37115	0.00000	55604.1	6457.9	0.0	S
28.593	0.0000	0.0000	104.446	0.11115	0.00000	55604.1	18812.9	0.0	S
52.593	0.0000	0.0000	104.064	0.06712	0.00000	55604.1	25664.4	0.0	S
76.593	0.0000	0.0000	103.784	0.04862	0.00000	55604.1	30411.0	0.0	S
100.593	0.0000	0.0000	103.559	0.03837	0.00000	55604.1	34065.7	0.0	S
124.593	0.0000	0.0000	103.369	0.03173	0.00000	55604.1	37041.9	0.0	S
148.593	0.0000	0.0000	103.204	0.02702	0.00000	55604.1	39549.5	0.0	S
172.593	0.0000	0.0000	103.057	0.02348	0.00000	55604.1	41711.6	0.0	S
196.593	0.0000	0.0000	102.925	0.02071	0.00000	55604.1	43606.8	0.0	S
220.593	0.0000	0.0000	102.805	0.01847	0.00000	55604.1	45289.5	0.0	S
244.593	0.0000	0.0000	102.696	0.01663	0.00000	55604.1	46798.7	0.0	S
268.593	0.0000	0.0000	102.594	0.01510	0.00000	55604.1	48163.8	0.0	S
292.593	0.0000	0.0000	102.500	0.01379	0.00000	55604.1	49407.2	0.0	S
316.593	0.0000	0.0000	102.412	0.01267	0.00000	55604.1	50546.4	0.0	S
340.593	0.0000	0.0000	102.329	0.01169	0.00000	55604.1	51595.7	0.0	S
364.593	0.0000	0.0000	102.252	0.01084	0.00000	55604.1	52566.5	0.0	S
388.593	0.0000	0.0000	102.178	0.01008	0.00000	55604.1	53468.1	0.0	S
412.593	0.0000	0.0000	102.109	0.00941	0.00000	55604.1	54308.5	0.0	S
436.593	0.0000	0.0000	102.043	0.00750	0.00000	55604.1	55094.1	0.0	S
460.593	0.0000	0.0000	101.963	0.00295	0.00000	55604.1	55604.1	0.0	S
484.593	0.0000	0.0000	101.854	0.00000	0.00000	55604.1	55604.1	0.0	S
508.593	0.0000	0.0000	101.760	0.00000	0.00000	55604.1	55604.1	0.0	S
532.593	0.0000	0.0000	101.675	0.00000	0.00000	55604.1	55604.1	0.0	S
556.593	0.0000	0.0000	101.597	0.00000	0.00000	55604.1	55604.1	0.0	S
580.593	0.0000	0.0000	101.527	0.00000	0.00000	55604.1	55604.1	0.0	S
604.593	0.0000	0.0000	101.461	0.00000	0.00000	55604.1	55604.1	0.0	S
628.593	0.0000	0.0000	101.400	0.00000	0.00000	55604.1	55604.1	0.0	S
652.593	0.0000	0.0000	101.342	0.00000	0.00000	55604.1	55604.1	0.0	S
676.593	0.0000	0.0000	101.288	0.00000	0.00000	55604.1	55604.1	0.0	S
700.593	0.0000	0.0000	101.238	0.00000	0.00000	55604.1	55604.1	0.0	S
724.593	0.0000	0.0000	101.189	0.00000	0.00000	55604.1	55604.1	0.0	S
748.593	0.0000	0.0000	101.144	----	----	55604.1	55604.1	0.0	N.A.

Plot of Cumulative Volumes and Pond Stage vs Elapsed Time

Scenario 3 :: FDOT 4 Hour - 4 hr - 100 yr

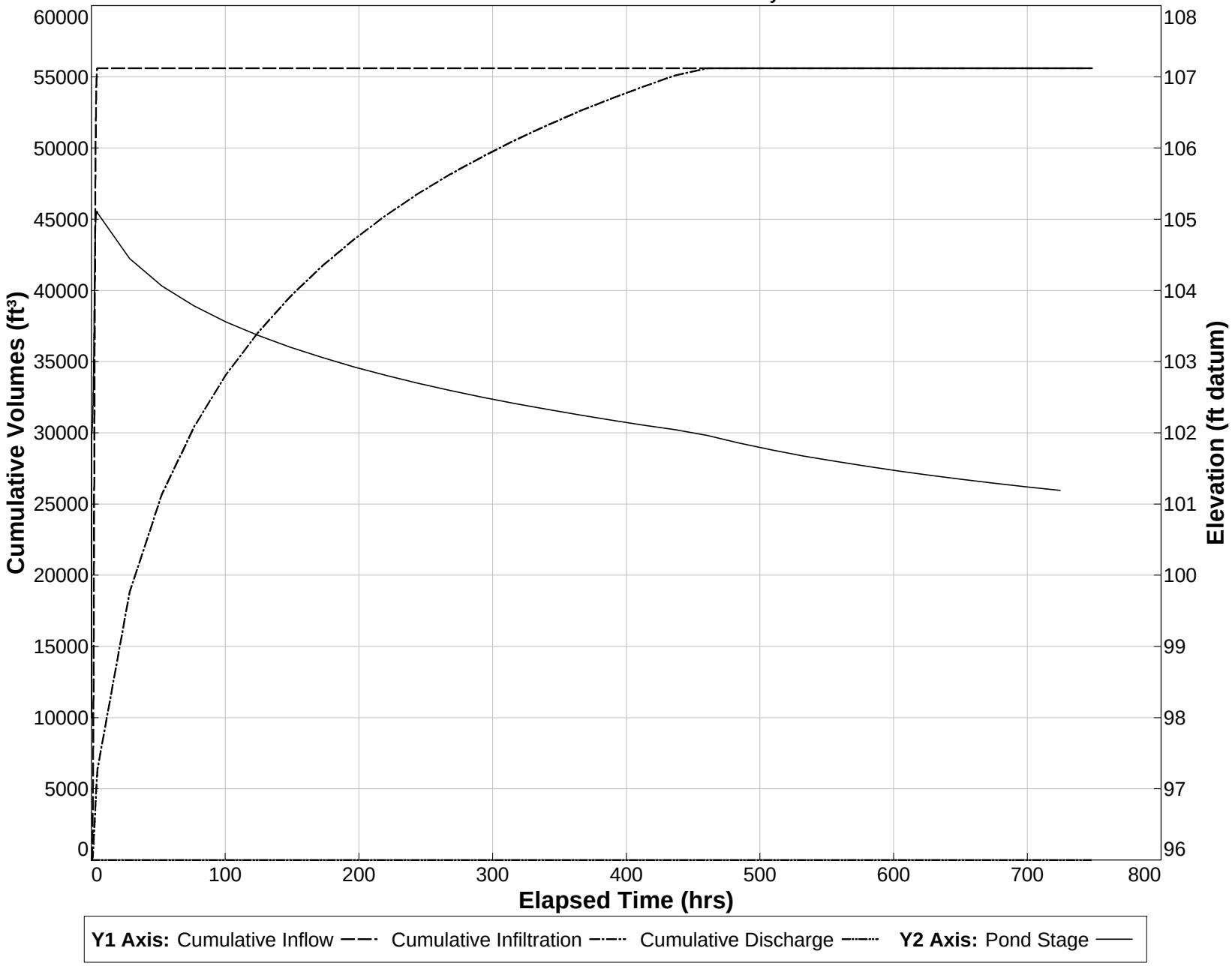

Detailed Results (cont,d.) *:: Scenario 4 :: FDOT 8 Hour - 8 hr - 100 yr*

Elapsed Time (hours)	Inflow Rate (ft³/s)	Outside Recharge (ft/day)	Stage Elevation (ft datum)	Infiltration Rate (ft³/s)	Overflow Discharge (ft³/s)	Cumulative Inflow Volume (ft³)	Cumulative Infiltration Volume (ft³)	Cumulative Discharge Volume (ft³)	Flow Type
6.433	1.1162	0.0000	105.385	0.37460	0.00000	63170.0	7798.3	0.0	S
6.448	1.1156	0.0000	105.387	0.37421	0.00000	63228.2	7817.9	0.0	S
6.462	1.1151	0.0000	105.389	0.37384	0.00000	63286.4	7837.4	0.0	S
6.477	1.1146	0.0000	105.391	0.37347	0.00000	63344.5	7856.9	0.0	S
6.491	1.1143	0.0000	105.392	0.37310	0.00000	63402.7	7876.3	0.0	S
6.506	1.1141	0.0000	105.394	0.37274	0.00000	63460.8	7895.8	0.0	S
6.520	1.1140	0.0000	105.396	0.37239	0.00000	63518.9	7915.2	0.0	S
6.534	1.1139	0.0000	105.398	0.37203	0.00000	63577.0	7934.6	0.0	S
6.549	1.1139	0.0000	105.400	0.37169	0.00000	63635.1	7954.0	0.0	S
6.563	1.1139	0.0000	105.402	0.37134	0.00000	63693.2	7973.4	0.0	S
6.578	1.1140	0.0000	105.403	0.37100	0.00000	63751.3	7992.8	0.0	S
6.592	1.1141	0.0000	105.405	0.37066	0.00000	63809.4	8012.1	0.0	S
6.607	1.1141	0.0000	105.407	0.37033	0.00000	63867.5	8031.4	0.0	S
6.621	1.1142	0.0000	105.409	0.36999	0.00000	63925.7	8050.7	0.0	S
6.636	1.1143	0.0000	105.411	0.36965	0.00000	63983.8	8070.0	0.0	S
6.650	1.1144	0.0000	105.413	0.36932	0.00000	64041.9	8089.3	0.0	S
6.665	1.1145	0.0000	105.414	0.36898	0.00000	64100.0	8108.6	0.0	S
6.679	1.1145	0.0000	105.416	0.36864	0.00000	64158.2	8127.8	0.0	S
6.694	1.1146	0.0000	105.418	0.36831	0.00000	64216.3	8147.0	0.0	S
6.708	1.1147	0.0000	105.420	0.36797	0.00000	64274.4	8166.2	0.0	S
6.723	1.1148	0.0000	105.422	0.36763	0.00000	64332.6	8185.4	0.0	S
6.737	1.1148	0.0000	105.424	0.36728	0.00000	64390.7	8204.6	0.0	S
6.752	1.1149	0.0000	105.425	0.36694	0.00000	64448.9	8223.7	0.0	S
6.766	1.1150	0.0000	105.427	0.36659	0.00000	64507.0	8242.9	0.0	S
6.781	1.1151	0.0000	105.429	0.36624	0.00000	64565.2	8262.0	0.0	S
6.795	1.1151	0.0000	105.431	0.36589	0.00000	64623.4	8281.1	0.0	S
6.810	1.1152	0.0000	105.433	0.36553	0.00000	64681.5	8300.1	0.0	S
6.824	1.1153	0.0000	105.435	0.36517	0.00000	64739.7	8319.2	0.0	S
6.839	1.1154	0.0000	105.436	0.36481	0.00000	64797.9	8338.2	0.0	S
6.853	1.1154	0.0000	105.438	0.36445	0.00000	64856.1	8357.3	0.0	S
6.868	1.1155	0.0000	105.440	0.36408	0.00000	64914.2	8376.3	0.0	S
6.882	1.1156	0.0000	105.442	0.36371	0.00000	64972.4	8395.2	0.0	S
6.897	1.1157	0.0000	105.444	0.36333	0.00000	65030.6	8414.2	0.0	S
6.911	1.1157	0.0000	105.446	0.36296	0.00000	65088.8	8433.1	0.0	S
6.926	1.1158	0.0000	105.447	0.36257	0.00000	65147.0	8452.1	0.0	S
6.940	1.1159	0.0000	105.449	0.36219	0.00000	65205.2	8471.0	0.0	S
6.955	1.1160	0.0000	105.451	0.36180	0.00000	65263.4	8489.8	0.0	S
6.969	1.1160	0.0000	105.453	0.36141	0.00000	65321.6	8508.7	0.0	S
6.984	1.1161	0.0000	105.455	0.36101	0.00000	65379.8	8527.5	0.0	S
6.998	1.1162	0.0000	105.457	0.36061	0.00000	65438.1	8546.4	0.0	S
7.013	1.1116	0.0000	105.458	0.36020	0.00000	65496.2	8565.2	0.0	S
7.027	1.0985	0.0000	105.460	0.35977	0.00000	65553.8	8583.9	0.0	S
7.042	1.0727	0.0000	105.462	0.35930	0.00000	65610.4	8602.7	0.0	S
7.056	1.0323	0.0000	105.464	0.35877	0.00000	65665.3	8621.4	0.0	S
7.071	0.9881	0.0000	105.465	0.35819	0.00000	65718.0	8640.1	0.0	S
7.085	0.9452	0.0000	105.467	0.35755	0.00000	65768.4	8658.8	0.0	S
7.100	0.9076	0.0000	105.468	0.35687	0.00000	65816.8	8677.4	0.0	S
7.114	0.8758	0.0000	105.469	0.35616	0.00000	65863.3	8696.0	0.0	S
7.129	0.8490	0.0000	105.471	0.35542	0.00000	65908.3	8714.6	0.0	S
7.143	0.8264	0.0000	105.472	0.35467	0.00000	65952.0	8733.1	0.0	S
7.158	0.8072	0.0000	105.473	0.35391	0.00000	65994.6	8751.6	0.0	S
7.172	0.7906	0.0000	105.474	0.35314	0.00000	66036.2	8770.0	0.0	S
7.186	0.7761	0.0000	105.475	0.35237	0.00000	66077.1	8788.4	0.0	S
7.201	0.7634	0.0000	105.476	0.35160	0.00000	66117.2	8806.8	0.0	S
7.215	0.7515	0.0000	105.477	0.35082	0.00000	66156.7	8825.1	0.0	S
7.230	0.7414	0.0000	105.478	0.35006	0.00000	66195.7	8843.4	0.0	S
7.244	0.7325	0.0000	105.479	0.34929	0.00000	66234.1	8861.6	0.0	S
7.259	0.7245	0.0000	105.480	0.34853	0.00000	66272.1	8879.8	0.0	S
7.273	0.7174	0.0000	105.481	0.34777	0.00000	66309.7	8898.0	0.0	S
7.288	0.7110	0.0000	105.482	0.34703	0.00000	66347.0	8916.1	0.0	S
7.302	0.7053	0.0000	105.483	0.34628	0.00000	66383.9	8934.2	0.0	S
7.317	0.7003	0.0000	105.484	0.34555	0.00000	66420.6	8952.2	0.0	S
7.331	0.6958	0.0000	105.484	0.34482	0.00000	66457.0	8970.2	0.0	S
7.346	0.6918	0.0000	105.485	0.34411	0.00000	66493.2	8988.2	0.0	S
7.360	0.6884	0.0000	105.486	0.34340	0.00000	66529.2	9006.1	0.0	S
7.375	0.6854	0.0000	105.487	0.34269	0.00000	66565.0	9024.0	0.0	S
7.389	0.6827	0.0000	105.488	0.34200	0.00000	66600.7	9041.9	0.0	S
7.404	0.6804	0.0000	105.489	0.34132	0.00000	66636.2	9059.7	0.0	S
7.418	0.6784	0.0000	105.489	0.34064	0.00000	66671.7	9077.5	0.0	S
7.433	0.6768	0.0000	105.490	0.33998	0.00000	66707.0	9095.2	0.0	S
7.447	0.6753	0.0000	105.491	0.33932	0.00000	66742.3	9112.9	0.0	S
7.462	0.6741	0.0000	105.492	0.33868	0.00000	66777.5	9130.6	0.0	S
7.476	0.6732	0.0000	105.493	0.33804	0.00000	66812.6	9148.3	0.0	S
7.491	0.6724	0.0000	105.493	0.33741	0.00000	66847.7	9165.9	0.0	S

Detailed Results (cont,d.) *:: Scenario 4 :: FDOT 8 Hour - 8 hr - 100 yr*

Elapsed Time (hours)	Inflow Rate (ft³/s)	Outside Recharge (ft/day)	Stage Elevation (ft datum)	Infiltration Rate (ft³/s)	Overflow Discharge (ft³/s)	Cumulative Inflow Volume (ft³)	Cumulative Infiltration Volume (ft³)	Cumulative Discharge Volume (ft³)	Flow Type
7.505	0.6718	0.0000	105.494	0.33679	0.00000	66882.7	9183.5	0.0	S
7.520	0.6714	0.0000	105.495	0.33618	0.00000	66917.8	9201.0	0.0	S
7.534	0.6711	0.0000	105.496	0.33558	0.00000	66952.8	9218.5	0.0	S
7.549	0.6710	0.0000	105.497	0.33499	0.00000	66987.8	9236.0	0.0	S
7.563	0.6709	0.0000	105.498	0.33441	0.00000	67022.8	9253.5	0.0	S
7.578	0.6709	0.0000	105.498	0.33384	0.00000	67057.8	9270.9	0.0	S
7.592	0.6709	0.0000	105.499	0.33328	0.00000	67092.8	9288.3	0.0	S
7.607	0.6710	0.0000	105.500	0.33272	0.00000	67127.8	9305.7	0.0	S
7.621	0.6710	0.0000	105.501	0.33218	0.00000	67162.8	9323.0	0.0	S
7.636	0.6710	0.0000	105.502	0.33164	0.00000	67197.8	9340.3	0.0	S
7.650	0.6710	0.0000	105.502	0.33111	0.00000	67232.8	9357.6	0.0	S
7.665	0.6711	0.0000	105.503	0.33059	0.00000	67267.8	9374.9	0.0	S
7.679	0.6711	0.0000	105.504	0.33008	0.00000	67302.8	9392.1	0.0	S
7.694	0.6711	0.0000	105.505	0.32958	0.00000	67337.8	9409.3	0.0	S
7.708	0.6711	0.0000	105.506	0.32909	0.00000	67372.8	9426.5	0.0	S
7.723	0.6712	0.0000	105.507	0.32860	0.00000	67407.8	9443.6	0.0	S
7.737	0.6712	0.0000	105.507	0.32812	0.00000	67442.8	9460.8	0.0	S
7.752	0.6712	0.0000	105.508	0.32765	0.00000	67477.8	9477.9	0.0	S
7.766	0.6712	0.0000	105.509	0.32719	0.00000	67512.8	9494.9	0.0	S
7.781	0.6713	0.0000	105.510	0.32673	0.00000	67547.8	9512.0	0.0	S
7.795	0.6713	0.0000	105.511	0.32628	0.00000	67582.9	9529.0	0.0	S
7.810	0.6713	0.0000	105.512	0.32584	0.00000	67617.9	9546.0	0.0	S
7.824	0.6713	0.0000	105.512	0.32541	0.00000	67652.9	9563.0	0.0	S
7.838	0.6714	0.0000	105.513	0.32498	0.00000	67687.9	9580.0	0.0	S
7.853	0.6714	0.0000	105.514	0.32456	0.00000	67722.9	9596.9	0.0	S
7.867	0.6714	0.0000	105.515	0.32415	0.00000	67758.0	9613.8	0.0	S
7.882	0.6714	0.0000	105.516	0.32374	0.00000	67793.0	9630.7	0.0	S
7.896	0.6715	0.0000	105.517	0.32334	0.00000	67828.0	9647.6	0.0	S
7.911	0.6715	0.0000	105.517	0.32295	0.00000	67863.0	9664.5	0.0	S
7.925	0.6715	0.0000	105.518	0.32256	0.00000	67898.0	9681.3	0.0	S
7.940	0.6715	0.0000	105.519	0.32218	0.00000	67933.1	9698.1	0.0	S
7.954	0.6716	0.0000	105.520	0.32180	0.00000	67968.1	9714.9	0.0	S
7.969	0.6716	0.0000	105.521	0.32143	0.00000	68003.1	9731.7	0.0	S
7.983	0.6716	0.0000	105.522	0.32107	0.00000	68038.2	9748.4	0.0	S
7.998	0.6716	0.0000	105.523	0.32071	0.00000	68073.2	9765.2	0.0	S
8.012	0.6648	0.0000	105.523	0.32034	0.00000	68108.0	9781.9	0.0	S
8.027	0.6453	0.0000	105.524	0.31995	0.00000	68142.2	9798.6	0.0	S
8.041	0.6068	0.0000	105.525	0.31951	0.00000	68174.9	9815.3	0.0	S
8.056	0.5463	0.0000	105.526	0.31899	0.00000	68204.9	9831.9	0.0	S
8.070	0.4798	0.0000	105.526	0.31840	0.00000	68231.7	9848.6	0.0	S
8.085	0.4153	0.0000	105.526	0.31774	0.00000	68255.0	9865.1	0.0	S
8.099	0.3585	0.0000	105.527	0.31702	0.00000	68275.2	9881.7	0.0	S
8.114	0.3104	0.0000	105.527	0.31625	0.00000	68292.7	9898.2	0.0	S
8.128	0.2699	0.0000	105.526	0.31546	0.00000	68307.8	9914.7	0.0	S
8.143	0.2358	0.0000	105.526	0.31465	0.00000	68321.0	9931.1	0.0	S
8.157	0.2067	0.0000	105.526	0.31383	0.00000	68332.5	9947.5	0.0	S
8.172	0.1817	0.0000	105.526	0.31301	0.00000	68342.7	9963.9	0.0	S
8.186	0.1597	0.0000	105.525	0.31219	0.00000	68351.6	9980.2	0.0	S
8.201	0.1405	0.0000	105.525	0.31137	0.00000	68359.4	9996.4	0.0	S
8.215	0.1226	0.0000	105.525	0.31056	0.00000	68366.3	10012.7	0.0	S
8.230	0.1072	0.0000	105.524	0.30975	0.00000	68372.2	10028.8	0.0	S
8.244	0.0937	0.0000	105.524	0.30895	0.00000	68377.5	10045.0	0.0	S
8.259	0.0817	0.0000	105.523	0.30816	0.00000	68382.1	10061.1	0.0	S
8.273	0.0709	0.0000	105.523	0.30738	0.00000	68386.0	10077.1	0.0	S
8.288	0.0613	0.0000	105.522	0.30662	0.00000	68389.5	10093.1	0.0	S
8.302	0.0527	0.0000	105.521	0.30586	0.00000	68392.5	10109.1	0.0	S
8.317	0.0450	0.0000	105.521	0.30512	0.00000	68395.0	10125.0	0.0	S
8.331	0.0382	0.0000	105.520	0.30439	0.00000	68397.2	10140.9	0.0	S
8.346	0.0322	0.0000	105.520	0.30367	0.00000	68399.0	10156.8	0.0	S
8.360	0.0269	0.0000	105.519	0.30296	0.00000	68400.6	10172.6	0.0	S
8.375	0.0224	0.0000	105.518	0.30226	0.00000	68401.8	10188.4	0.0	S
8.389	0.0184	0.0000	105.517	0.30157	0.00000	68402.9	10204.1	0.0	S
8.404	0.0148	0.0000	105.517	0.30090	0.00000	68403.8	10219.9	0.0	S
8.418	0.0118	0.0000	105.516	0.30023	0.00000	68404.5	10235.5	0.0	S
8.433	0.0092	0.0000	105.515	0.29958	0.00000	68405.0	10251.2	0.0	S
8.447	0.0071	0.0000	105.515	0.29893	0.00000	68405.4	10266.8	0.0	S
8.462	0.0052	0.0000	105.514	0.29830	0.00000	68405.8	10282.4	0.0	S
8.476	0.0037	0.0000	105.513	0.29767	0.00000	68406.0	10297.9	0.0	S
8.490	0.0025	0.0000	105.513	0.29706	0.00000	68406.1	10313.4	0.0	S
8.505	0.0016	0.0000	105.512	0.29645	0.00000	68406.3	10328.9	0.0	S
8.519	0.0009	0.0000	105.511	0.29585	0.00000	68406.3	10344.3	0.0	S
8.534	0.0005	0.0000	105.510	0.29526	0.00000	68406.4	10359.8	0.0	S
8.548	0.0002	0.0000	105.510	0.29468	0.00000	68406.4	10375.1	0.0	S
8.563	0.0000	0.0000	105.509	0.29410	0.00000	68406.4	10390.5	0.0	S

Detailed Results (cont,d.) *:: Scenario 4 :: FDOT 8 Hour - 8 hr - 100 yr*

Elapsed Time (hours)	Inflow Rate (ft³/s)	Outside Recharge (ft/day)	Stage Elevation (ft datum)	Infiltration Rate (ft³/s)	Overflow Discharge (ft³/s)	Cumulative Inflow Volume (ft³)	Cumulative Infiltration Volume (ft³)	Cumulative Discharge Volume (ft³)	Flow Type
8.577	0.0000	0.0000	105.508	0.29353	0.00000	68406.4	10405.8	0.0	S
8.592	0.0000	0.0000	105.508	0.29316	0.00000	68406.4	10421.1	0.0	S
32.592	0.0000	0.0000	104.927	0.11180	0.00000	68406.4	22421.0	0.0	S
56.592	0.0000	0.0000	104.547	0.07267	0.00000	68406.4	29740.9	0.0	S
80.592	0.0000	0.0000	104.261	0.05399	0.00000	68406.4	34979.1	0.0	S
104.592	0.0000	0.0000	104.029	0.04312	0.00000	68406.4	39070.3	0.0	S
128.592	0.0000	0.0000	103.831	0.03592	0.00000	68406.4	42430.0	0.0	S
152.592	0.0000	0.0000	103.658	0.03075	0.00000	68406.4	45277.4	0.0	S
176.592	0.0000	0.0000	103.503	0.02682	0.00000	68406.4	47743.3	0.0	S
200.592	0.0000	0.0000	103.364	0.02374	0.00000	68406.4	49912.7	0.0	S
224.592	0.0000	0.0000	103.237	0.02124	0.00000	68406.4	51844.7	0.0	S
248.592	0.0000	0.0000	103.121	0.01917	0.00000	68406.4	53582.2	0.0	S
272.592	0.0000	0.0000	103.013	0.01743	0.00000	68406.4	55157.2	0.0	S
296.592	0.0000	0.0000	102.912	0.01596	0.00000	68406.4	56594.9	0.0	S
320.592	0.0000	0.0000	102.818	0.01469	0.00000	68406.4	57914.8	0.0	S
344.592	0.0000	0.0000	102.730	0.01358	0.00000	68406.4	59132.6	0.0	S
368.592	0.0000	0.0000	102.647	0.01261	0.00000	68406.4	60261.1	0.0	S
392.592	0.0000	0.0000	102.568	0.01174	0.00000	68406.4	61310.7	0.0	S
416.592	0.0000	0.0000	102.494	0.01098	0.00000	68406.4	62290.3	0.0	S
440.592	0.0000	0.0000	102.423	0.01029	0.00000	68406.4	63207.3	0.0	S
464.592	0.0000	0.0000	102.355	0.00966	0.00000	68406.4	64067.8	0.0	S
488.592	0.0000	0.0000	102.291	0.00910	0.00000	68406.4	64877.3	0.0	S
512.592	0.0000	0.0000	102.230	0.00859	0.00000	68406.4	65640.6	0.0	S
536.592	0.0000	0.0000	102.171	0.00812	0.00000	68406.4	66361.7	0.0	S
560.592	0.0000	0.0000	102.115	0.00769	0.00000	68406.4	67044.2	0.0	S
584.592	0.0000	0.0000	102.061	0.00730	0.00000	68406.4	67691.4	0.0	S
608.592	0.0000	0.0000	102.009	0.00414	0.00000	68406.4	68306.0	0.0	S
632.592	0.0000	0.0000	101.922	0.00058	0.00000	68406.4	68406.4	0.0	S
656.592	0.0000	0.0000	101.838	0.00000	0.00000	68406.4	68406.4	0.0	S
680.592	0.0000	0.0000	101.763	0.00000	0.00000	68406.4	68406.4	0.0	S
704.592	0.0000	0.0000	101.694	0.00000	0.00000	68406.4	68406.4	0.0	S
728.592	0.0000	0.0000	101.631	0.00000	0.00000	68406.4	68406.4	0.0	S
752.592	0.0000	0.0000	101.572	----	----	68406.4	68406.4	0.0	N.A.

Plot of Cumulative Volumes and Pond Stage vs Elapsed Time

Scenario 4 :: FDOT 8 Hour - 8 hr - 100 yr

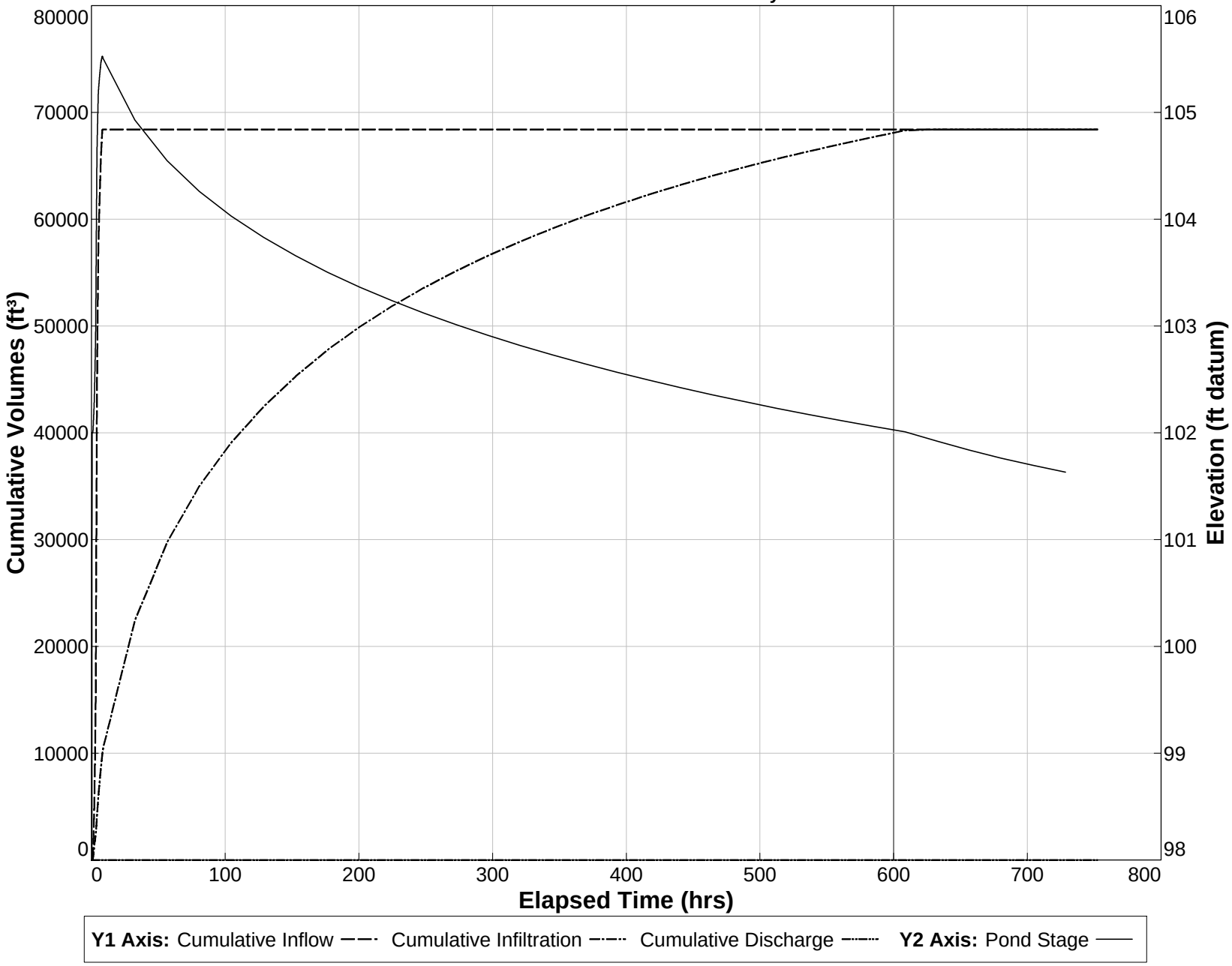

Detailed Results (cont,d.) *:: Scenario 5 :: FDOT 24 Hour - 24 hr - 100 yr*

Elapsed Time (hours)	Inflow Rate (ft³/s)	Outside Recharge (ft/day)	Stage Elevation (ft datum)	Infiltration Rate (ft³/s)	Overflow Discharge (ft³/s)	Cumulative Inflow Volume (ft³)	Cumulative Infiltration Volume (ft³)	Cumulative Discharge Volume (ft³)	Flow Type
22.516	0.3167	0.0000	106.165	0.22410	0.30201	97585.2	19330.7	5465.2	S
22.530	0.3165	0.0000	106.165	0.22381	0.30187	97601.7	19342.4	5480.9	S
22.545	0.3163	0.0000	106.164	0.22353	0.30173	97618.2	19354.1	5496.7	S
22.559	0.3162	0.0000	106.164	0.22326	0.30159	97634.7	19365.7	5512.4	S
22.574	0.3162	0.0000	106.163	0.22298	0.30145	97651.2	19377.4	5528.1	S
22.588	0.3162	0.0000	106.163	0.22272	0.30131	97667.7	19389.0	5543.8	S
22.603	0.3162	0.0000	106.162	0.22245	0.30117	97684.2	19400.6	5559.5	S
22.617	0.3162	0.0000	106.162	0.22219	0.30103	97700.7	19412.2	5575.3	S
22.632	0.3162	0.0000	106.162	0.22193	0.30089	97717.2	19423.8	5590.9	S
22.646	0.3162	0.0000	106.161	0.22167	0.30075	97733.7	19435.3	5606.6	S
22.661	0.3162	0.0000	106.161	0.22142	0.30061	97750.2	19446.9	5622.3	S
22.675	0.3162	0.0000	106.160	0.22117	0.30047	97766.7	19458.4	5638.0	S
22.690	0.3162	0.0000	106.160	0.22092	0.30033	97783.2	19470.0	5653.7	S
22.704	0.3162	0.0000	106.159	0.22067	0.30019	97799.7	19481.5	5669.3	S
22.719	0.3162	0.0000	106.159	0.22043	0.30005	97816.2	19493.0	5685.0	S
22.733	0.3162	0.0000	106.158	0.22019	0.29991	97832.7	19504.5	5700.6	S
22.748	0.3162	0.0000	106.158	0.21995	0.29978	97849.1	19516.0	5716.3	S
22.762	0.3162	0.0000	106.157	0.21971	0.29964	97865.6	19527.4	5731.9	S
22.777	0.3162	0.0000	106.157	0.21948	0.29950	97882.1	19538.9	5747.5	S
22.791	0.3162	0.0000	106.157	0.21924	0.29936	97898.6	19550.3	5763.1	S
22.806	0.3162	0.0000	106.156	0.21901	0.29923	97915.1	19561.8	5778.8	S
22.820	0.3162	0.0000	106.156	0.21878	0.29909	97931.6	19573.2	5794.4	S
22.834	0.3162	0.0000	106.155	0.21855	0.29895	97948.1	19584.6	5810.0	S
22.849	0.3163	0.0000	106.155	0.21833	0.29881	97964.6	19596.0	5825.6	S
22.863	0.3163	0.0000	106.154	0.21810	0.29868	97981.1	19607.4	5841.1	S
22.878	0.3163	0.0000	106.154	0.21788	0.29854	97997.6	19618.7	5856.7	S
22.892	0.3163	0.0000	106.153	0.21766	0.29841	98014.1	19630.1	5872.3	S
22.907	0.3163	0.0000	106.153	0.21744	0.29827	98030.6	19641.4	5887.8	S
22.921	0.3163	0.0000	106.152	0.21722	0.29813	98047.1	19652.8	5903.4	S
22.936	0.3163	0.0000	106.152	0.21701	0.29800	98063.6	19664.1	5918.9	S
22.950	0.3163	0.0000	106.152	0.21679	0.29786	98080.1	19675.4	5934.5	S
22.965	0.3163	0.0000	106.151	0.21658	0.29773	98096.6	19686.7	5950.0	S
22.979	0.3163	0.0000	106.151	0.21636	0.29759	98113.1	19698.0	5965.5	S
22.994	0.3163	0.0000	106.150	0.21615	0.29746	98129.6	19709.3	5981.1	S
23.008	0.3163	0.0000	106.150	0.21594	0.29732	98146.1	19720.5	5996.6	S
23.023	0.3163	0.0000	106.149	0.21573	0.29719	98162.6	19731.8	6012.1	S
23.037	0.3162	0.0000	106.149	0.21553	0.29705	98179.1	19743.1	6027.6	S
23.052	0.3162	0.0000	106.149	0.21532	0.29692	98195.6	19754.3	6043.1	S
23.066	0.3161	0.0000	106.148	0.21511	0.29678	98212.0	19765.5	6058.5	S
23.081	0.3160	0.0000	106.148	0.21491	0.29665	98228.5	19776.7	6074.0	S
23.095	0.3160	0.0000	106.147	0.21471	0.29652	98245.0	19787.9	6089.5	S
23.110	0.3159	0.0000	106.147	0.21450	0.29638	98261.5	19799.1	6105.0	S
23.124	0.3159	0.0000	106.146	0.21430	0.29625	98278.0	19810.3	6120.4	S
23.139	0.3158	0.0000	106.146	0.21410	0.29611	98294.4	19821.5	6135.9	S
23.153	0.3158	0.0000	106.146	0.21390	0.29598	98310.9	19832.6	6151.3	S
23.168	0.3158	0.0000	106.145	0.21371	0.29585	98327.4	19843.8	6166.7	S
23.182	0.3157	0.0000	106.145	0.21351	0.29571	98343.8	19854.9	6182.2	S
23.197	0.3157	0.0000	106.144	0.21331	0.29558	98360.3	19866.1	6197.6	S
23.211	0.3157	0.0000	106.144	0.21312	0.29545	98376.8	19877.2	6213.0	S
23.226	0.3157	0.0000	106.143	0.21293	0.29531	98393.3	19888.3	6228.4	S
23.240	0.3157	0.0000	106.143	0.21273	0.29518	98409.7	19899.4	6243.8	S
23.255	0.3157	0.0000	106.142	0.21254	0.29505	98426.2	19910.5	6259.2	S
23.269	0.3156	0.0000	106.142	0.21235	0.29492	98442.7	19921.6	6274.6	S
23.284	0.3156	0.0000	106.142	0.21216	0.29478	98459.1	19932.7	6290.0	S
23.298	0.3156	0.0000	106.141	0.21197	0.29465	98475.6	19943.7	6305.3	S
23.313	0.3156	0.0000	106.141	0.21178	0.29452	98492.0	19954.8	6320.7	S
23.327	0.3156	0.0000	106.140	0.21160	0.29439	98508.5	19965.8	6336.1	S
23.342	0.3156	0.0000	106.140	0.21141	0.29426	98525.0	19976.8	6351.4	S
23.356	0.3156	0.0000	106.140	0.21122	0.29413	98541.4	19987.9	6366.8	S
23.371	0.3156	0.0000	106.139	0.21104	0.29399	98557.9	19998.9	6382.1	S
23.385	0.3156	0.0000	106.139	0.21086	0.29386	98574.4	20009.9	6397.4	S
23.400	0.3156	0.0000	106.138	0.21067	0.29373	98590.8	20020.9	6412.8	S
23.414	0.3156	0.0000	106.138	0.21049	0.29360	98607.3	20031.9	6428.1	S
23.429	0.3156	0.0000	106.137	0.21031	0.29347	98623.7	20042.8	6443.4	S
23.443	0.3156	0.0000	106.137	0.21013	0.29334	98640.2	20053.8	6458.7	S
23.458	0.3156	0.0000	106.137	0.20995	0.29321	98656.7	20064.7	6474.0	S
23.472	0.3156	0.0000	106.136	0.20977	0.29308	98673.1	20075.7	6489.3	S
23.486	0.3156	0.0000	106.136	0.20959	0.29295	98689.6	20086.6	6504.6	S
23.501	0.3156	0.0000	106.135	0.20942	0.29282	98706.1	20097.6	6519.8	S
23.515	0.3156	0.0000	106.135	0.20924	0.29269	98722.5	20108.5	6535.1	S
23.530	0.3156	0.0000	106.134	0.20906	0.29256	98739.0	20119.4	6550.4	S
23.544	0.3156	0.0000	106.134	0.20889	0.29243	98755.4	20130.3	6565.6	S
23.559	0.3156	0.0000	106.134	0.20872	0.29230	98771.9	20141.2	6580.9	S
23.573	0.3156	0.0000	106.133	0.20854	0.29217	98788.4	20152.1	6596.1	S

Detailed Results (cont,d.) *:: Scenario 5 :: FDOT 24 Hour - 24 hr - 100 yr*

Elapsed Time (hours)	Inflow Rate (ft³/s)	Outside Recharge (ft/day)	Stage Elevation (ft datum)	Infiltration Rate (ft³/s)	Overflow Discharge (ft³/s)	Cumulative Inflow Volume (ft³)	Cumulative Infiltration Volume (ft³)	Cumulative Discharge Volume (ft³)	Flow Type
23.588	0.3156	0.0000	106.133	0.20837	0.29204	98804.8	20162.9	6611.4	S
23.602	0.3156	0.0000	106.132	0.20820	0.29191	98821.3	20173.8	6626.6	S
23.617	0.3156	0.0000	106.132	0.20802	0.29178	98837.8	20184.7	6641.8	S
23.631	0.3156	0.0000	106.132	0.20785	0.29166	98854.2	20195.5	6657.0	S
23.646	0.3156	0.0000	106.131	0.20768	0.29153	98870.7	20206.3	6672.2	S
23.660	0.3156	0.0000	106.131	0.20752	0.29140	98887.1	20217.2	6687.4	S
23.675	0.3156	0.0000	106.130	0.20735	0.29127	98903.6	20228.0	6702.6	S
23.689	0.3156	0.0000	106.130	0.20718	0.29114	98920.1	20238.8	6717.8	S
23.704	0.3156	0.0000	106.130	0.20701	0.29101	98936.5	20249.6	6733.0	S
23.718	0.3156	0.0000	106.129	0.20684	0.29089	98953.0	20260.4	6748.2	S
23.733	0.3156	0.0000	106.129	0.20668	0.29076	98969.5	20271.2	6763.3	S
23.747	0.3157	0.0000	106.128	0.20651	0.29063	98985.9	20282.0	6778.5	S
23.762	0.3157	0.0000	106.128	0.20635	0.29050	99002.4	20292.7	6793.7	S
23.776	0.3157	0.0000	106.128	0.20618	0.29038	99018.9	20303.5	6808.8	S
23.791	0.3157	0.0000	106.127	0.20602	0.29025	99035.3	20314.2	6824.0	S
23.805	0.3157	0.0000	106.127	0.20586	0.29012	99051.8	20325.0	6839.1	S
23.820	0.3157	0.0000	106.126	0.20570	0.29000	99068.2	20335.7	6854.2	S
23.834	0.3157	0.0000	106.126	0.20553	0.28987	99084.7	20346.4	6869.3	S
23.849	0.3157	0.0000	106.126	0.20537	0.28974	99101.2	20357.1	6884.5	S
23.863	0.3157	0.0000	106.125	0.20521	0.28962	99117.6	20367.9	6899.6	S
23.878	0.3157	0.0000	106.125	0.20505	0.28949	99134.1	20378.6	6914.7	S
23.892	0.3157	0.0000	106.124	0.20489	0.28936	99150.6	20389.2	6929.8	S
23.907	0.3157	0.0000	106.124	0.20474	0.28924	99167.0	20399.9	6944.9	S
23.921	0.3157	0.0000	106.124	0.20458	0.28911	99183.5	20410.6	6959.9	S
23.936	0.3157	0.0000	106.123	0.20442	0.28899	99200.0	20421.3	6975.0	S
23.950	0.3157	0.0000	106.123	0.20426	0.28886	99216.4	20431.9	6990.1	S
23.965	0.3157	0.0000	106.122	0.20411	0.28874	99232.9	20442.6	7005.2	S
23.979	0.3157	0.0000	106.122	0.20395	0.28861	99249.4	20453.2	7020.2	S
23.994	0.3157	0.0000	106.122	0.20379	0.28849	99265.8	20463.9	7035.3	S
24.008	0.3136	0.0000	106.121	0.20363	0.28836	99282.2	20474.5	7050.3	S
24.023	0.3063	0.0000	106.121	0.20346	0.28823	99298.4	20485.1	7065.3	S
24.037	0.2909	0.0000	106.120	0.20326	0.28809	99314.0	20495.7	7080.4	S
24.052	0.2656	0.0000	106.120	0.20303	0.28794	99328.5	20506.3	7095.4	S
24.066	0.2348	0.0000	106.119	0.20275	0.28777	99341.6	20516.9	7110.4	S
24.081	0.2040	0.0000	106.119	0.20244	0.28758	99353.0	20527.5	7125.4	S
24.095	0.1762	0.0000	106.118	0.20210	0.28737	99362.9	20538.0	7140.4	S
24.110	0.1524	0.0000	106.117	0.20174	0.28714	99371.5	20548.5	7155.4	S
24.124	0.1323	0.0000	106.117	0.20136	0.28689	99378.9	20559.0	7170.4	S
24.138	0.1154	0.0000	106.116	0.20098	0.28663	99385.4	20569.5	7185.3	S
24.153	0.1011	0.0000	106.115	0.20059	0.28636	99391.0	20580.0	7200.3	S
24.167	0.0888	0.0000	106.114	0.20020	0.28608	99396.0	20590.5	7215.2	S
24.182	0.0780	0.0000	106.113	0.19981	0.28579	99400.3	20600.9	7230.1	S
24.196	0.0686	0.0000	106.112	0.19942	0.28550	99404.1	20611.3	7245.0	S
24.211	0.0601	0.0000	106.111	0.19903	0.28520	99407.5	20621.7	7259.9	S
24.225	0.0525	0.0000	106.110	0.19865	0.28489	99410.4	20632.1	7274.8	S
24.240	0.0459	0.0000	106.109	0.19827	0.28458	99413.0	20642.4	7289.6	S
24.254	0.0400	0.0000	106.108	0.19789	0.28426	99415.2	20652.8	7304.4	S
24.269	0.0348	0.0000	106.107	0.19752	0.28394	99417.2	20663.1	7319.3	S
24.283	0.0301	0.0000	106.106	0.19716	0.28362	99418.9	20673.4	7334.1	S
24.298	0.0259	0.0000	106.105	0.19680	0.28329	99420.3	20683.6	7348.9	S
24.312	0.0222	0.0000	106.104	0.19644	0.28296	99421.6	20693.9	7363.6	S
24.327	0.0189	0.0000	106.103	0.19609	0.28263	99422.7	20704.1	7378.4	S
24.341	0.0159	0.0000	106.102	0.19575	0.28230	99423.6	20714.3	7393.1	S
24.356	0.0134	0.0000	106.101	0.19541	0.28196	99424.3	20724.5	7407.8	S
24.370	0.0111	0.0000	106.100	0.19508	0.28162	99425.0	20734.7	7422.5	S
24.385	0.0092	0.0000	106.099	0.19475	0.28128	99425.5	20744.9	7437.2	S
24.399	0.0075	0.0000	106.098	0.19443	0.28094	99425.9	20755.0	7451.9	S
24.414	0.0060	0.0000	106.097	0.19411	0.28060	99426.3	20765.2	7466.5	S
24.428	0.0047	0.0000	106.096	0.19379	0.28026	99426.6	20775.3	7481.1	S
24.443	0.0036	0.0000	106.095	0.19349	0.27991	99426.8	20785.4	7495.7	S
24.457	0.0027	0.0000	106.094	0.19318	0.27957	99427.0	20795.5	7510.3	S
24.472	0.0019	0.0000	106.093	0.19288	0.27923	99427.1	20805.6	7524.9	S
24.486	0.0013	0.0000	106.092	0.19259	0.27888	99427.2	20815.6	7539.5	S
24.501	0.0009	0.0000	106.091	0.19230	0.27853	99427.2	20825.6	7554.0	S
24.515	0.0005	0.0000	106.090	0.19201	0.27819	99427.3	20835.7	7568.5	S
24.530	0.0003	0.0000	106.089	0.19173	0.27784	99427.3	20845.7	7583.0	S
24.544	0.0001	0.0000	106.088	0.19145	0.27750	99427.3	20855.7	7597.5	S
24.559	0.0000	0.0000	106.087	0.19118	0.27715	99427.3	20865.6	7612.0	S
24.573	0.0000	0.0000	106.085	0.19091	0.27680	99427.3	20875.6	7626.4	S
24.588	0.0000	0.0000	106.084	0.19065	0.27646	99427.3	20885.6	7640.8	S
48.588	0.0000	0.0000	105.620	0.03446	0.00000	99427.3	19419.5	19583.7	S
72.588	0.0000	0.0000	105.272	0.07592	0.00000	99427.3	26840.8	19583.7	S
96.588	0.0000	0.0000	104.993	0.05967	0.00000	99427.3	32537.9	19583.7	S
120.588	0.0000	0.0000	104.759	0.04911	0.00000	99427.3	37151.7	19583.7	S

Detailed Results (cont,d.) *:: Scenario 5 :: FDOT 24 Hour - 24 hr - 100 yr*

Elapsed Time (hours)	Inflow Rate (ft³/s)	Outside Recharge (ft/day)	Stage Elevation (ft datum)	Infiltration Rate (ft³/s)	Overflow Discharge (ft³/s)	Cumulative Inflow Volume (ft³)	Cumulative Infiltration Volume (ft³)	Cumulative Discharge Volume (ft³)	Flow Type
144.588	0.0000	0.0000	104.556	0.04168	0.00000	99427.3	41023.6	19583.7	S
168.588	0.0000	0.0000	104.376	0.03614	0.00000	99427.3	44353.7	19583.7	S
192.588	0.0000	0.0000	104.214	0.03184	0.00000	99427.3	47269.1	19583.7	S
216.588	0.0000	0.0000	104.066	0.02840	0.00000	99427.3	49856.3	19583.7	S
240.588	0.0000	0.0000	103.931	0.02559	0.00000	99427.3	52177.1	19583.7	S
264.588	0.0000	0.0000	103.806	0.02324	0.00000	99427.3	54277.4	19583.7	S
288.588	0.0000	0.0000	103.690	0.02124	0.00000	99427.3	56192.1	19583.7	S
312.588	0.0000	0.0000	103.581	0.01953	0.00000	99427.3	57948.3	19583.7	S
336.588	0.0000	0.0000	103.479	0.01805	0.00000	99427.3	59567.4	19583.7	S
360.588	0.0000	0.0000	103.383	0.01674	0.00000	99427.3	61066.7	19583.7	S
384.588	0.0000	0.0000	103.292	0.01559	0.00000	99427.3	62460.6	19583.7	S
408.588	0.0000	0.0000	103.206	0.01456	0.00000	99427.3	63760.8	19583.7	S
432.588	0.0000	0.0000	103.124	0.01364	0.00000	99427.3	64977.2	19583.7	S
456.588	0.0000	0.0000	103.046	0.01282	0.00000	99427.3	66118.5	19583.7	S
480.588	0.0000	0.0000	102.971	0.01207	0.00000	99427.3	67191.7	19583.7	S
504.588	0.0000	0.0000	102.900	0.01139	0.00000	99427.3	68203.5	19583.7	S
528.588	0.0000	0.0000	102.832	0.01077	0.00000	99427.3	69159.3	19583.7	S
552.588	0.0000	0.0000	102.767	0.01020	0.00000	99427.3	70063.9	19583.7	S
576.588	0.0000	0.0000	102.704	0.00968	0.00000	99427.3	70921.6	19583.7	S
600.588	0.0000	0.0000	102.644	0.00920	0.00000	99427.3	71736.2	19583.7	S
624.588	0.0000	0.0000	102.586	0.00876	0.00000	99427.3	72511.1	19583.7	S
648.588	0.0000	0.0000	102.530	0.00835	0.00000	99427.3	73249.3	19583.7	S
672.588	0.0000	0.0000	102.476	0.00797	0.00000	99427.3	73953.3	19583.7	S
696.588	0.0000	0.0000	102.424	0.00761	0.00000	99427.3	74625.8	19583.7	S
720.588	0.0000	0.0000	102.374	0.00728	0.00000	99427.3	75268.7	19583.7	S
744.588	0.0000	0.0000	102.325	0.00697	0.00000	99427.3	75884.2	19583.7	S
768.588	0.0000	0.0000	102.278	----	----	99427.3	76474.0	19583.7	N.A.

Plot of Cumulative Volumes and Pond Stage vs Elapsed Time

Scenario 5 :: FDOT 24 Hour - 24 hr - 100 yr

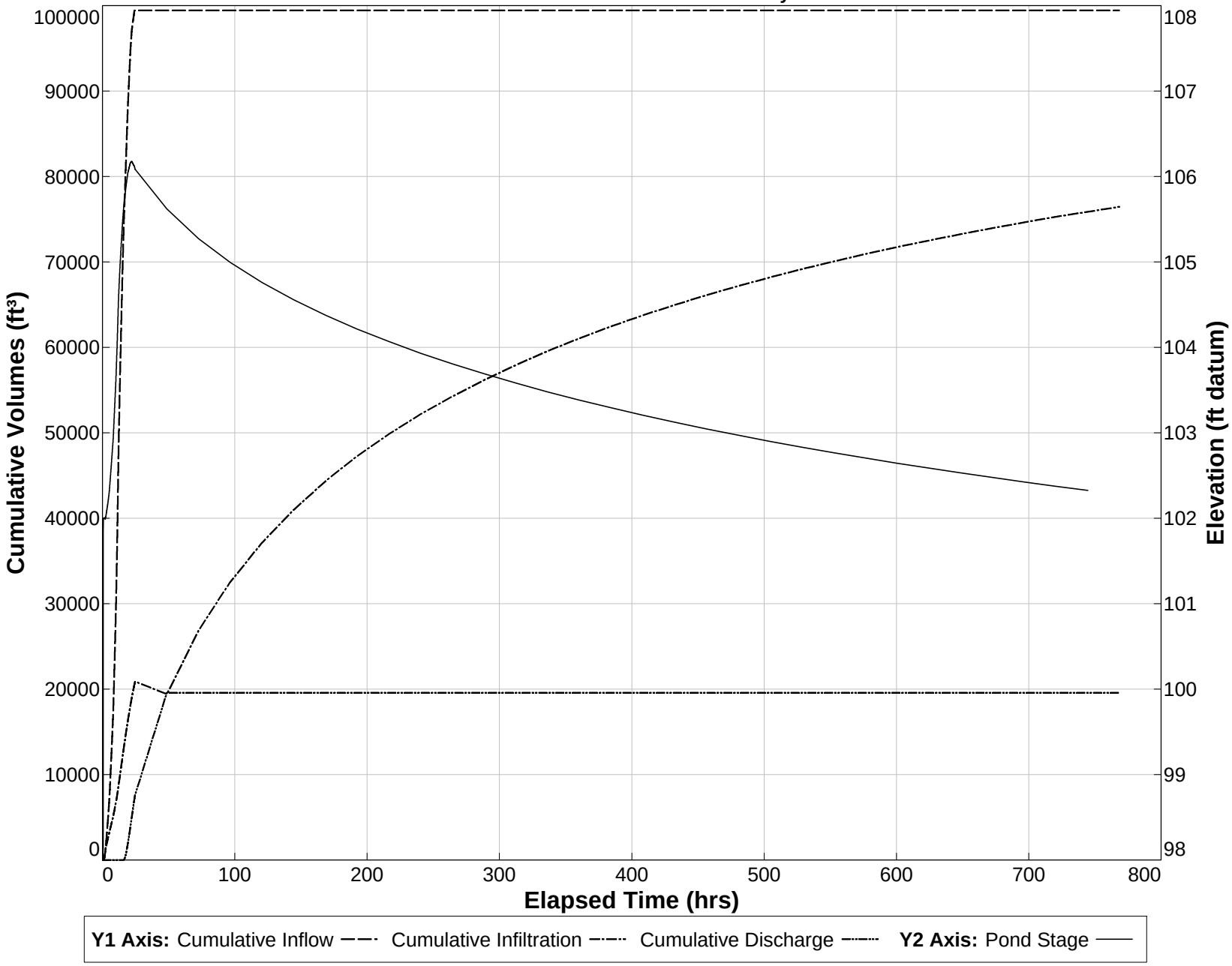

Detailed Results (cont,d.) *:: Scenario 6 :: FDOT 72 Hour - 72 hr - 100 yr*

Elapsed Time (hours)	Inflow Rate (ft³/s)	Outside Recharge (ft/day)	Stage Elevation (ft datum)	Infiltration Rate (ft³/s)	Overflow Discharge (ft³/s)	Cumulative Inflow Volume (ft³)	Cumulative Infiltration Volume (ft³)	Cumulative Discharge Volume (ft³)	Flow Type
70.764	0.1794	0.0000	106.304	0.12979	0.34148	127142.0	35405.3	15655.6	S
70.778	0.1794	0.0000	106.303	0.12971	0.34131	127151.4	35412.0	15673.4	S
70.793	0.1794	0.0000	106.303	0.12963	0.34114	127160.8	35418.8	15691.2	S
70.807	0.1794	0.0000	106.302	0.12955	0.34097	127170.1	35425.6	15709.0	S
70.822	0.1794	0.0000	106.301	0.12946	0.34080	127179.5	35432.3	15726.7	S
70.836	0.1794	0.0000	106.301	0.12938	0.34063	127188.8	35439.1	15744.5	S
70.851	0.1794	0.0000	106.300	0.12930	0.34046	127198.2	35445.8	15762.3	S
70.865	0.1794	0.0000	106.300	0.12921	0.34029	127207.6	35452.6	15780.0	S
70.880	0.1794	0.0000	106.299	0.12913	0.34012	127216.9	35459.3	15797.8	S
70.894	0.1794	0.0000	106.298	0.12906	0.33995	127226.3	35466.0	15815.5	S
70.909	0.1794	0.0000	106.298	0.12897	0.33978	127235.6	35472.8	15833.2	S
70.923	0.1794	0.0000	106.297	0.12889	0.33961	127245.0	35479.5	15851.0	S
70.938	0.1794	0.0000	106.296	0.12881	0.33944	127254.4	35486.2	15868.7	S
70.952	0.1794	0.0000	106.296	0.12873	0.33927	127263.7	35492.9	15886.4	S
70.967	0.1794	0.0000	106.295	0.12865	0.33910	127273.1	35499.6	15904.1	S
70.981	0.1794	0.0000	106.295	0.12858	0.33893	127282.4	35506.3	15921.7	S
70.996	0.1794	0.0000	106.294	0.12849	0.33876	127291.8	35513.1	15939.4	S
71.010	0.1794	0.0000	106.293	0.12841	0.33859	127301.1	35519.8	15957.1	S
71.025	0.1794	0.0000	106.293	0.12833	0.33842	127310.5	35526.5	15974.7	S
71.039	0.1794	0.0000	106.292	0.12825	0.33825	127319.9	35533.1	15992.4	S
71.054	0.1794	0.0000	106.291	0.12817	0.33808	127329.2	35539.8	16010.0	S
71.068	0.1794	0.0000	106.291	0.12809	0.33791	127338.6	35546.5	16027.7	S
71.082	0.1794	0.0000	106.290	0.12802	0.33774	127347.9	35553.2	16045.3	S
71.097	0.1794	0.0000	106.290	0.12794	0.33757	127357.3	35559.9	16062.9	S
71.111	0.1794	0.0000	106.289	0.12786	0.33740	127366.7	35566.5	16080.5	S
71.126	0.1794	0.0000	106.288	0.12778	0.33724	127376.0	35573.2	16098.1	S
71.140	0.1794	0.0000	106.288	0.12770	0.33707	127385.4	35579.9	16115.7	S
71.155	0.1794	0.0000	106.287	0.12763	0.33690	127394.7	35586.5	16133.2	S
71.169	0.1794	0.0000	106.286	0.12755	0.33673	127404.1	35593.2	16150.8	S
71.184	0.1794	0.0000	106.286	0.12747	0.33656	127413.5	35599.8	16168.4	S
71.198	0.1794	0.0000	106.285	0.12739	0.33639	127422.8	35606.5	16185.9	S
71.213	0.1794	0.0000	106.285	0.12732	0.33622	127432.2	35613.1	16203.5	S
71.227	0.1794	0.0000	106.284	0.12724	0.33605	127441.5	35619.8	16221.0	S
71.242	0.1794	0.0000	106.283	0.12716	0.33588	127450.9	35626.4	16238.5	S
71.256	0.1794	0.0000	106.283	0.12709	0.33571	127460.3	35633.0	16256.0	S
71.271	0.1794	0.0000	106.282	0.12702	0.33555	127469.6	35639.7	16273.5	S
71.285	0.1794	0.0000	106.281	0.12694	0.33538	127479.0	35646.3	16291.0	S
71.300	0.1794	0.0000	106.281	0.12686	0.33521	127488.3	35652.9	16308.5	S
71.314	0.1794	0.0000	106.280	0.12679	0.33504	127497.7	35659.5	16326.0	S
71.329	0.1794	0.0000	106.280	0.12671	0.33487	127507.1	35666.1	16343.5	S
71.343	0.1794	0.0000	106.279	0.12663	0.33470	127516.4	35672.7	16360.9	S
71.358	0.1794	0.0000	106.278	0.12656	0.33453	127525.8	35679.3	16378.4	S
71.372	0.1794	0.0000	106.278	0.12649	0.33437	127535.1	35685.9	16395.8	S
71.387	0.1794	0.0000	106.277	0.12641	0.33420	127544.5	35692.5	16413.3	S
71.401	0.1794	0.0000	106.277	0.12634	0.33403	127553.9	35699.1	16430.7	S
71.416	0.1794	0.0000	106.276	0.12626	0.33386	127563.2	35705.7	16448.1	S
71.430	0.1794	0.0000	106.275	0.12618	0.33369	127572.6	35712.3	16465.5	S
71.445	0.1794	0.0000	106.275	0.12611	0.33352	127581.9	35718.9	16482.9	S
71.459	0.1794	0.0000	106.274	0.12604	0.33336	127591.3	35725.4	16500.3	S
71.474	0.1794	0.0000	106.273	0.12596	0.33319	127600.7	35732.0	16517.7	S
71.488	0.1794	0.0000	106.273	0.12589	0.33302	127610.0	35738.6	16535.1	S
71.503	0.1794	0.0000	106.272	0.12582	0.33285	127619.4	35745.2	16552.5	S
71.517	0.1794	0.0000	106.272	0.12575	0.33268	127628.7	35751.7	16569.8	S
71.532	0.1794	0.0000	106.271	0.12567	0.33252	127638.1	35758.3	16587.2	S
71.546	0.1795	0.0000	106.270	0.12559	0.33235	127647.5	35764.8	16604.5	S
71.561	0.1795	0.0000	106.270	0.12552	0.33218	127656.8	35771.4	16621.8	S
71.575	0.1795	0.0000	106.269	0.12546	0.33201	127666.2	35777.9	16639.2	S
71.590	0.1795	0.0000	106.269	0.12538	0.33184	127675.5	35784.5	16656.5	S
71.604	0.1795	0.0000	106.268	0.12531	0.33168	127684.9	35791.0	16673.8	S
71.619	0.1795	0.0000	106.267	0.12524	0.33151	127694.3	35797.5	16691.1	S
71.633	0.1795	0.0000	106.267	0.12516	0.33134	127703.6	35804.1	16708.4	S
71.648	0.1795	0.0000	106.266	0.12508	0.33117	127713.0	35810.6	16725.6	S
71.662	0.1795	0.0000	106.266	0.12502	0.33101	127722.3	35817.1	16742.9	S
71.677	0.1795	0.0000	106.265	0.12495	0.33084	127731.7	35823.6	16760.2	S
71.691	0.1795	0.0000	106.264	0.12488	0.33067	127741.1	35830.1	16777.4	S
71.706	0.1795	0.0000	106.264	0.12480	0.33050	127750.4	35836.7	16794.7	S
71.720	0.1795	0.0000	106.263	0.12473	0.33034	127759.8	35843.2	16811.9	S
71.734	0.1795	0.0000	106.262	0.12467	0.33017	127769.1	35849.7	16829.1	S
71.749	0.1795	0.0000	106.262	0.12459	0.33000	127778.5	35856.2	16846.3	S
71.763	0.1795	0.0000	106.261	0.12452	0.32984	127787.9	35862.7	16863.5	S
71.778	0.1795	0.0000	106.261	0.12445	0.32967	127797.2	35869.2	16880.7	S
71.792	0.1795	0.0000	106.260	0.12439	0.32950	127806.6	35875.6	16897.9	S
71.807	0.1795	0.0000	106.259	0.12431	0.32933	127815.9	35882.1	16915.1	S
71.821	0.1795	0.0000	106.259	0.12424	0.32917	127825.3	35888.6	16932.3	S

Detailed Results (cont,d.) *:: Scenario 6 :: FDOT 72 Hour - 72 hr - 100 yr*

Elapsed Time (hours)	Inflow Rate (ft³/s)	Outside Recharge (ft/day)	Stage Elevation (ft datum)	Infiltration Rate (ft³/s)	Overflow Discharge (ft³/s)	Cumulative Inflow Volume (ft³)	Cumulative Infiltration Volume (ft³)	Cumulative Discharge Volume (ft³)	Flow Type
71.836	0.1795	0.0000	106.258	0.12417	0.32900	127834.7	35895.1	16949.5	S
71.850	0.1795	0.0000	106.258	0.12410	0.32883	127844.0	35901.6	16966.6	S
71.865	0.1795	0.0000	106.257	0.12403	0.32867	127853.4	35908.0	16983.8	S
71.879	0.1795	0.0000	106.256	0.12396	0.32850	127862.8	35914.5	17000.9	S
71.894	0.1795	0.0000	106.256	0.12389	0.32833	127872.1	35921.0	17018.0	S
71.908	0.1795	0.0000	106.255	0.12383	0.32817	127881.5	35927.4	17035.2	S
71.923	0.1795	0.0000	106.255	0.12376	0.32800	127890.8	35933.9	17052.3	S
71.937	0.1795	0.0000	106.254	0.12368	0.32783	127900.2	35940.3	17069.4	S
71.952	0.1795	0.0000	106.253	0.12362	0.32767	127909.5	35946.8	17086.5	S
71.966	0.1795	0.0000	106.253	0.12355	0.32750	127918.9	35953.2	17103.5	S
71.981	0.1795	0.0000	106.252	0.12348	0.32733	127928.3	35959.7	17120.6	S
71.995	0.1795	0.0000	106.252	0.12341	0.32717	127937.6	35966.1	17137.7	S
72.010	0.1780	0.0000	106.251	0.12334	0.32700	127947.0	35972.6	17154.8	S
72.024	0.1734	0.0000	106.251	0.12326	0.32683	127956.1	35979.0	17171.8	S
72.039	0.1641	0.0000	106.250	0.12317	0.32666	127964.9	35985.4	17188.9	S
72.053	0.1490	0.0000	106.249	0.12305	0.32648	127973.1	35991.8	17205.9	S
72.068	0.1314	0.0000	106.249	0.12291	0.32629	127980.4	35998.3	17222.9	S
72.082	0.1140	0.0000	106.248	0.12275	0.32609	127986.8	36004.7	17239.9	S
72.097	0.0984	0.0000	106.247	0.12257	0.32588	127992.3	36011.1	17256.9	S
72.111	0.0852	0.0000	106.246	0.12238	0.32566	127997.1	36017.4	17273.9	S
72.126	0.0740	0.0000	106.246	0.12218	0.32543	128001.3	36023.8	17290.9	S
72.140	0.0646	0.0000	106.245	0.12198	0.32520	128004.9	36030.2	17307.9	S
72.155	0.0566	0.0000	106.244	0.12178	0.32496	128008.1	36036.5	17324.8	S
72.169	0.0497	0.0000	106.243	0.12158	0.32471	128010.8	36042.9	17341.8	S
72.184	0.0437	0.0000	106.242	0.12137	0.32447	128013.3	36049.2	17358.7	S
72.198	0.0384	0.0000	106.241	0.12117	0.32422	128015.4	36055.6	17375.6	S
72.213	0.0336	0.0000	106.240	0.12097	0.32396	128017.3	36061.9	17392.5	S
72.227	0.0294	0.0000	106.239	0.12077	0.32370	128018.9	36068.2	17409.4	S
72.242	0.0257	0.0000	106.238	0.12057	0.32345	128020.4	36074.5	17426.3	S
72.256	0.0224	0.0000	106.238	0.12038	0.32318	128021.6	36080.8	17443.2	S
72.271	0.0194	0.0000	106.237	0.12019	0.32292	128022.7	36087.0	17460.0	S
72.285	0.0168	0.0000	106.236	0.12000	0.32266	128023.6	36093.3	17476.8	S
72.300	0.0145	0.0000	106.235	0.11981	0.32239	128024.5	36099.5	17493.7	S
72.314	0.0124	0.0000	106.234	0.11963	0.32212	128025.2	36105.8	17510.5	S
72.329	0.0105	0.0000	106.233	0.11945	0.32185	128025.8	36112.0	17527.3	S
72.343	0.0089	0.0000	106.232	0.11927	0.32158	128026.3	36118.3	17544.0	S
72.358	0.0074	0.0000	106.231	0.11909	0.32131	128026.7	36124.5	17560.8	S
72.372	0.0062	0.0000	106.230	0.11892	0.32104	128027.0	36130.7	17577.6	S
72.386	0.0051	0.0000	106.229	0.11876	0.32077	128027.3	36136.9	17594.3	S
72.401	0.0041	0.0000	106.228	0.11859	0.32050	128027.6	36143.1	17611.0	S
72.415	0.0033	0.0000	106.227	0.11842	0.32022	128027.8	36149.2	17627.7	S
72.430	0.0026	0.0000	106.226	0.11827	0.31995	128027.9	36155.4	17644.4	S
72.444	0.0020	0.0000	106.225	0.11811	0.31967	128028.0	36161.6	17661.1	S
72.459	0.0015	0.0000	106.224	0.11795	0.31940	128028.1	36167.7	17677.8	S
72.473	0.0011	0.0000	106.223	0.11780	0.31912	128028.2	36173.9	17694.4	S
72.488	0.0007	0.0000	106.222	0.11765	0.31885	128028.3	36180.0	17711.1	S
72.502	0.0005	0.0000	106.221	0.11750	0.31857	128028.3	36186.2	17727.7	S
72.517	0.0003	0.0000	106.220	0.11736	0.31830	128028.3	36192.3	17744.3	S
72.531	0.0001	0.0000	106.219	0.11721	0.31802	128028.3	36198.4	17760.9	S
72.546	0.0001	0.0000	106.219	0.11707	0.31775	128028.3	36204.5	17777.5	S
72.560	0.0000	0.0000	106.218	0.11693	0.31747	128028.3	36210.6	17794.0	S
72.575	0.0000	0.0000	106.217	0.11680	0.31719	128028.3	36216.7	17810.6	S
72.589	0.0000	0.0000	106.216	0.11663	0.31692	128028.3	36222.8	17827.1	S
96.589	0.0000	0.0000	105.685	-0.00325	0.05723	128028.3	32193.2	33990.4	S
120.589	0.0000	0.0000	105.410	0.04865	0.00000	128028.3	35660.4	36462.7	S
144.589	0.0000	0.0000	105.174	0.05291	0.00000	128028.3	40599.9	36462.7	S
168.589	0.0000	0.0000	104.966	0.04541	0.00000	128028.3	44802.8	36462.7	S
192.589	0.0000	0.0000	104.781	0.03965	0.00000	128028.3	48446.9	36462.7	S
216.589	0.0000	0.0000	104.613	0.03510	0.00000	128028.3	51654.7	36462.7	S
240.589	0.0000	0.0000	104.461	0.03142	0.00000	128028.3	54512.7	36462.7	S
264.589	0.0000	0.0000	104.320	0.02839	0.00000	128028.3	57084.5	36462.7	S
288.589	0.0000	0.0000	104.190	0.02584	0.00000	128028.3	59417.8	36462.7	S
312.589	0.0000	0.0000	104.068	0.02366	0.00000	128028.3	61549.0	36462.7	S
336.589	0.0000	0.0000	103.954	0.02179	0.00000	128028.3	63507.0	36462.7	S
360.589	0.0000	0.0000	103.847	0.02016	0.00000	128028.3	65314.9	36462.7	S
384.589	0.0000	0.0000	103.746	0.01873	0.00000	128028.3	66991.3	36462.7	S
408.589	0.0000	0.0000	103.650	0.01746	0.00000	128028.3	68551.5	36462.7	S
432.589	0.0000	0.0000	103.560	0.01633	0.00000	128028.3	70008.5	36462.7	S
456.589	0.0000	0.0000	103.474	0.01531	0.00000	128028.3	71373.0	36462.7	S
480.589	0.0000	0.0000	103.391	0.01440	0.00000	128028.3	72654.4	36462.7	S
504.589	0.0000	0.0000	103.313	0.01357	0.00000	128028.3	73860.6	36462.7	S
528.589	0.0000	0.0000	103.238	0.01281	0.00000	128028.3	74998.4	36462.7	S
552.589	0.0000	0.0000	103.166	0.01212	0.00000	128028.3	76074.1	36462.7	S
576.589	0.0000	0.0000	103.097	0.01149	0.00000	128028.3	77092.8	36462.7	S

Detailed Results (cont,d.) *:: Scenario 6 :: FDOT 72 Hour - 72 hr - 100 yr*

Elapsed Time (hours)	Inflow Rate (ft^3/s)	Outside Recharge (ft/day)	Stage Elevation (ft datum)	Infiltration Rate (ft^3/s)	Overflow Discharge (ft^3/s)	Cumulative Inflow Volume (ft^3)	Cumulative Infiltration Volume (ft^3)	Cumulative Discharge Volume (ft^3)	Flow Type
600.589	0.0000	0.0000	103.031	0.01091	0.00000	128028.3	78059.3	36462.7	S
624.589	0.0000	0.0000	102.967	0.01037	0.00000	128028.3	78977.7	36462.7	S
648.589	0.0000	0.0000	102.905	0.00988	0.00000	128028.3	79851.7	36462.7	S
672.589	0.0000	0.0000	102.846	0.00942	0.00000	128028.3	80684.7	36462.7	S
696.589	0.0000	0.0000	102.789	0.00900	0.00000	128028.3	81479.6	36462.7	S
720.589	0.0000	0.0000	102.734	0.00860	0.00000	128028.3	82239.2	36462.7	S
744.589	0.0000	0.0000	102.680	0.00823	0.00000	128028.3	82965.8	36462.7	S
768.589	0.0000	0.0000	102.629	0.00789	0.00000	128028.3	83661.7	36462.7	S
792.589	0.0000	0.0000	102.579	0.00756	0.00000	128028.3	84328.8	36462.7	S
816.589	0.0000	0.0000	102.530	----	----	128028.3	84968.8	36462.7	N.A.

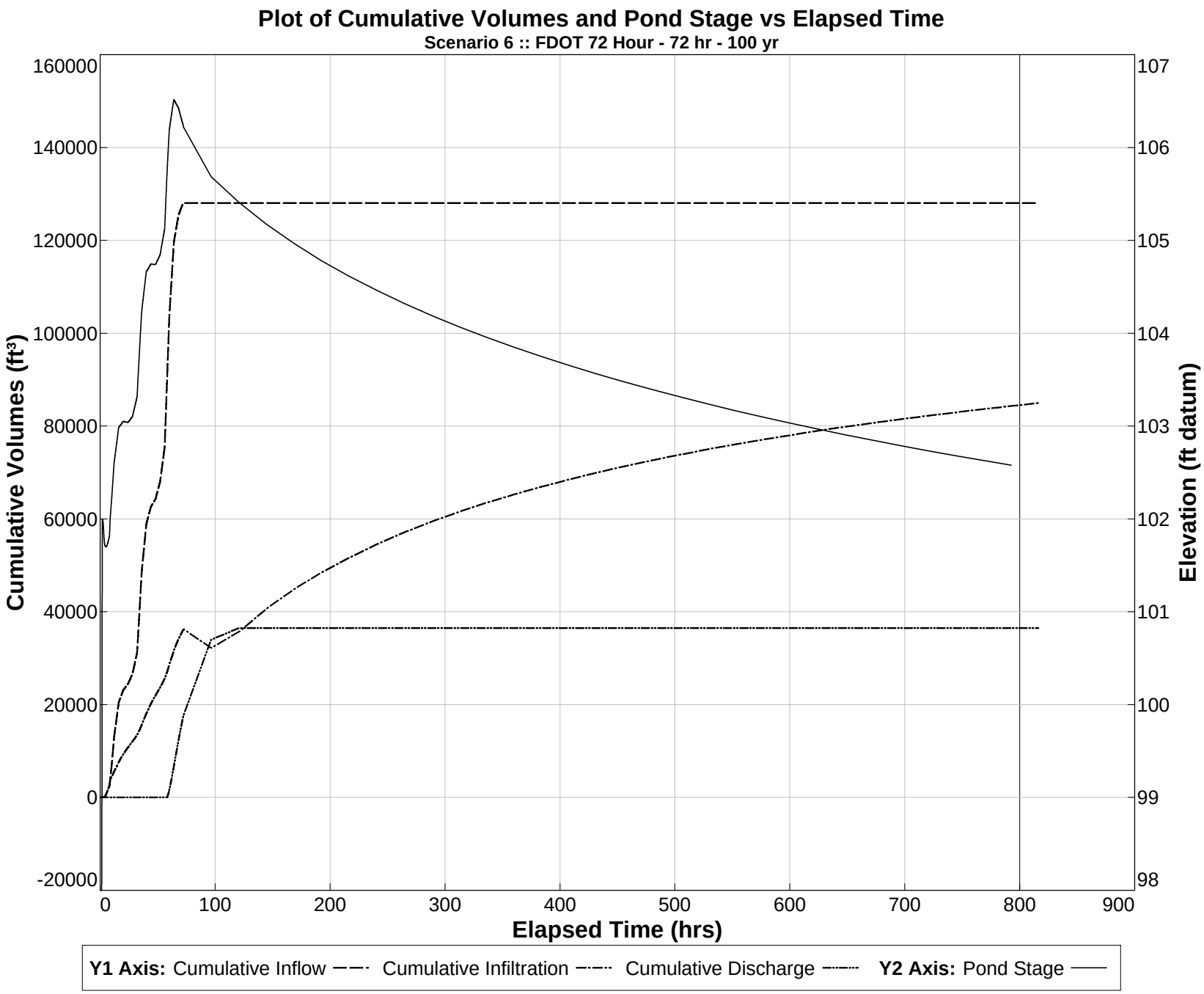

Detailed Results (cont,d.) *:: Scenario 7 :: FDOT 168 Hour - 168 hr - 100 yr*

Elapsed Time (hours)	Inflow Rate (ft³/s)	Outside Recharge (ft/day)	Stage Elevation (ft datum)	Infiltration Rate (ft³/s)	Overflow Discharge (ft³/s)	Cumulative Inflow Volume (ft³)	Cumulative Infiltration Volume (ft³)	Cumulative Discharge Volume (ft³)	Flow Type
166.188	0.2559	0.0000	106.436	0.10625	0.37525	149205.1	53151.8	16779.4	S
166.202	0.2559	0.0000	106.436	0.10619	0.37513	149218.4	53157.4	16799.0	S
166.217	0.2559	0.0000	106.435	0.10613	0.37501	149231.8	53162.9	16818.5	S
166.231	0.2559	0.0000	106.435	0.10607	0.37490	149245.1	53168.4	16838.1	S
166.246	0.2559	0.0000	106.434	0.10601	0.37478	149258.5	53174.0	16857.6	S
166.260	0.2559	0.0000	106.434	0.10595	0.37466	149271.8	53179.5	16877.2	S
166.275	0.2559	0.0000	106.433	0.10589	0.37454	149285.2	53185.0	16896.7	S
166.289	0.2559	0.0000	106.433	0.10583	0.37443	149298.5	53190.5	16916.2	S
166.304	0.2559	0.0000	106.432	0.10577	0.37431	149311.9	53196.1	16935.8	S
166.318	0.2559	0.0000	106.432	0.10571	0.37419	149325.2	53201.6	16955.3	S
166.332	0.2559	0.0000	106.431	0.10566	0.37407	149338.6	53207.1	16974.8	S
166.347	0.2559	0.0000	106.431	0.10560	0.37396	149351.9	53212.6	16994.3	S
166.361	0.2559	0.0000	106.431	0.10554	0.37384	149365.3	53218.1	17013.8	S
166.376	0.2559	0.0000	106.430	0.10548	0.37372	149378.6	53223.6	17033.3	S
166.390	0.2559	0.0000	106.430	0.10542	0.37360	149392.0	53229.1	17052.8	S
166.405	0.2559	0.0000	106.429	0.10536	0.37349	149405.3	53234.6	17072.3	S
166.419	0.2559	0.0000	106.429	0.10530	0.37337	149418.7	53240.1	17091.8	S
166.434	0.2559	0.0000	106.428	0.10525	0.37325	149432.0	53245.6	17111.2	S
166.448	0.2559	0.0000	106.428	0.10519	0.37313	149445.3	53251.1	17130.7	S
166.463	0.2559	0.0000	106.427	0.10513	0.37302	149458.7	53256.6	17150.2	S
166.477	0.2559	0.0000	106.427	0.10507	0.37290	149472.0	53262.0	17169.6	S
166.492	0.2559	0.0000	106.426	0.10501	0.37278	149485.4	53267.5	17189.1	S
166.506	0.2559	0.0000	106.426	0.10496	0.37267	149498.7	53273.0	17208.5	S
166.521	0.2559	0.0000	106.425	0.10490	0.37255	149512.1	53278.5	17227.9	S
166.535	0.2559	0.0000	106.425	0.10484	0.37243	149525.4	53283.9	17247.4	S
166.550	0.2559	0.0000	106.424	0.10478	0.37232	149538.8	53289.4	17266.8	S
166.564	0.2559	0.0000	106.424	0.10473	0.37220	149552.1	53294.9	17286.2	S
166.579	0.2559	0.0000	106.423	0.10467	0.37208	149565.5	53300.3	17305.6	S
166.593	0.2559	0.0000	106.423	0.10461	0.37197	149578.8	53305.8	17325.0	S
166.608	0.2559	0.0000	106.422	0.10456	0.37185	149592.2	53311.2	17344.4	S
166.622	0.2559	0.0000	106.422	0.10450	0.37173	149605.5	53316.7	17363.8	S
166.637	0.2559	0.0000	106.421	0.10444	0.37162	149618.9	53322.1	17383.2	S
166.651	0.2559	0.0000	106.421	0.10439	0.37150	149632.2	53327.6	17402.6	S
166.666	0.2559	0.0000	106.421	0.10433	0.37138	149645.6	53333.0	17422.0	S
166.680	0.2559	0.0000	106.420	0.10428	0.37127	149658.9	53338.5	17441.3	S
166.695	0.2559	0.0000	106.420	0.10422	0.37115	149672.3	53343.9	17460.7	S
166.709	0.2559	0.0000	106.419	0.10416	0.37104	149685.6	53349.4	17480.1	S
166.724	0.2559	0.0000	106.419	0.10411	0.37092	149699.0	53354.8	17499.4	S
166.738	0.2559	0.0000	106.418	0.10405	0.37080	149712.3	53360.2	17518.7	S
166.753	0.2559	0.0000	106.418	0.10400	0.37069	149725.7	53365.6	17538.1	S
166.767	0.2559	0.0000	106.417	0.10394	0.37057	149739.0	53371.1	17557.4	S
166.782	0.2559	0.0000	106.417	0.10389	0.37046	149752.4	53376.5	17576.7	S
166.796	0.2559	0.0000	106.416	0.10383	0.37034	149765.7	53381.9	17596.1	S
166.811	0.2559	0.0000	106.416	0.10378	0.37022	149779.1	53387.3	17615.4	S
166.825	0.2559	0.0000	106.415	0.10372	0.37011	149792.4	53392.7	17634.7	S
166.840	0.2559	0.0000	106.415	0.10367	0.36999	149805.8	53398.1	17654.0	S
166.854	0.2559	0.0000	106.414	0.10361	0.36988	149819.1	53403.5	17673.3	S
166.869	0.2559	0.0000	106.414	0.10356	0.36976	149832.5	53408.9	17692.6	S
166.883	0.2559	0.0000	106.414	0.10350	0.36965	149845.8	53414.3	17711.9	S
166.898	0.2559	0.0000	106.413	0.10345	0.36953	149859.2	53419.7	17731.1	S
166.912	0.2559	0.0000	106.413	0.10340	0.36941	149872.5	53425.1	17750.4	S
166.927	0.2559	0.0000	106.412	0.10334	0.36930	149885.8	53430.5	17769.7	S
166.941	0.2559	0.0000	106.412	0.10329	0.36918	149899.2	53435.9	17788.9	S
166.956	0.2559	0.0000	106.411	0.10323	0.36907	149912.5	53441.3	17808.2	S
166.970	0.2559	0.0000	106.411	0.10318	0.36895	149925.9	53446.7	17827.4	S
166.985	0.2559	0.0000	106.410	0.10313	0.36884	149939.3	53452.1	17846.7	S
166.999	0.2559	0.0000	106.410	0.10307	0.36872	149952.6	53457.4	17865.9	S
167.013	0.2559	0.0000	106.409	0.10302	0.36861	149965.9	53462.8	17885.1	S
167.028	0.2559	0.0000	106.409	0.10297	0.36849	149979.3	53468.2	17904.4	S
167.042	0.2559	0.0000	106.408	0.10291	0.36838	149992.6	53473.6	17923.6	S
167.057	0.2559	0.0000	106.408	0.10286	0.36826	150006.0	53478.9	17942.8	S
167.071	0.2559	0.0000	106.407	0.10281	0.36815	150019.3	53484.3	17962.0	S
167.086	0.2559	0.0000	106.407	0.10275	0.36803	150032.7	53489.6	17981.2	S
167.100	0.2559	0.0000	106.407	0.10270	0.36792	150046.0	53495.0	18000.4	S
167.115	0.2559	0.0000	106.406	0.10265	0.36780	150059.4	53500.4	18019.6	S
167.129	0.2559	0.0000	106.406	0.10260	0.36769	150072.7	53505.7	18038.8	S
167.144	0.2559	0.0000	106.405	0.10254	0.36757	150086.1	53511.1	18057.9	S
167.158	0.2559	0.0000	106.405	0.10249	0.36746	150099.4	53516.4	18077.1	S
167.173	0.2559	0.0000	106.404	0.10244	0.36734	150112.8	53521.8	18096.3	S
167.187	0.2559	0.0000	106.404	0.10239	0.36723	150126.1	53527.1	18115.4	S
167.202	0.2559	0.0000	106.403	0.10233	0.36711	150139.5	53532.4	18134.6	S
167.216	0.2559	0.0000	106.403	0.10228	0.36700	150152.8	53537.8	18153.7	S
167.231	0.2559	0.0000	106.402	0.10223	0.36689	150166.2	53543.1	18172.9	S
167.245	0.2559	0.0000	106.402	0.10218	0.36677	150179.5	53548.4	18192.0	S

Detailed Results (cont,d.) *:: Scenario 7 :: FDOT 168 Hour - 168 hr - 100 yr*

Elapsed Time (hours)	Inflow Rate (ft³/s)	Outside Recharge (ft/day)	Stage Elevation (ft datum)	Infiltration Rate (ft³/s)	Overflow Discharge (ft³/s)	Cumulative Inflow Volume (ft³)	Cumulative Infiltration Volume (ft³)	Cumulative Discharge Volume (ft³)	Flow Type
167.260	0.2559	0.0000	106.401	0.10213	0.36666	150192.9	53553.8	18211.1	S
167.274	0.2559	0.0000	106.401	0.10208	0.36654	150206.2	53559.1	18230.2	S
167.289	0.2559	0.0000	106.401	0.10203	0.36643	150219.6	53564.4	18249.4	S
167.303	0.2559	0.0000	106.400	0.10197	0.36631	150232.9	53569.7	18268.5	S
167.318	0.2559	0.0000	106.400	0.10192	0.36620	150246.3	53575.1	18287.6	S
167.332	0.2559	0.0000	106.399	0.10187	0.36609	150259.6	53580.4	18306.7	S
167.347	0.2559	0.0000	106.399	0.10182	0.36597	150273.0	53585.7	18325.8	S
167.361	0.2559	0.0000	106.398	0.10177	0.36586	150286.3	53591.0	18344.9	S
167.376	0.2559	0.0000	106.398	0.10172	0.36574	150299.7	53596.3	18363.9	S
167.390	0.2559	0.0000	106.397	0.10167	0.36563	150313.0	53601.6	18383.0	S
167.405	0.2559	0.0000	106.397	0.10162	0.36552	150326.4	53606.9	18402.1	S
167.419	0.2559	0.0000	106.396	0.10157	0.36540	150339.7	53612.2	18421.1	S
167.434	0.2559	0.0000	106.396	0.10152	0.36529	150353.1	53617.5	18440.2	S
167.448	0.2559	0.0000	106.396	0.10147	0.36517	150366.4	53622.8	18459.2	S
167.463	0.2559	0.0000	106.395	0.10142	0.36506	150379.8	53628.1	18478.3	S
167.477	0.2559	0.0000	106.395	0.10137	0.36495	150393.1	53633.4	18497.3	S
167.492	0.2559	0.0000	106.394	0.10132	0.36483	150406.5	53638.7	18516.4	S
167.506	0.2559	0.0000	106.394	0.10127	0.36472	150419.8	53643.9	18535.4	S
167.521	0.2560	0.0000	106.393	0.10122	0.36461	150433.2	53649.2	18554.4	S
167.535	0.2560	0.0000	106.393	0.10117	0.36449	150446.5	53654.5	18573.4	S
167.550	0.2560	0.0000	106.392	0.10112	0.36438	150459.9	53659.8	18592.4	S
167.564	0.2560	0.0000	106.392	0.10107	0.36427	150473.2	53665.1	18611.4	S
167.579	0.2560	0.0000	106.391	0.10102	0.36415	150486.6	53670.3	18630.4	S
167.593	0.2560	0.0000	106.391	0.10097	0.36404	150499.9	53675.6	18649.4	S
167.608	0.2560	0.0000	106.391	0.10092	0.36393	150513.3	53680.9	18668.4	S
167.622	0.2560	0.0000	106.390	0.10087	0.36381	150526.6	53686.1	18687.4	S
167.636	0.2560	0.0000	106.390	0.10082	0.36370	150540.0	53691.4	18706.4	S
167.651	0.2560	0.0000	106.389	0.10077	0.36359	150553.3	53696.6	18725.3	S
167.665	0.2560	0.0000	106.389	0.10073	0.36347	150566.7	53701.9	18744.3	S
167.680	0.2560	0.0000	106.388	0.10068	0.36336	150580.0	53707.1	18763.2	S
167.694	0.2560	0.0000	106.388	0.10063	0.36325	150593.4	53712.4	18782.2	S
167.709	0.2560	0.0000	106.387	0.10058	0.36313	150606.7	53717.6	18801.1	S
167.723	0.2560	0.0000	106.387	0.10053	0.36302	150620.1	53722.9	18820.1	S
167.738	0.2560	0.0000	106.387	0.10048	0.36291	150633.4	53728.1	18839.0	S
167.752	0.2560	0.0000	106.386	0.10043	0.36280	150646.8	53733.4	18857.9	S
167.767	0.2560	0.0000	106.386	0.10039	0.36268	150660.1	53738.6	18876.9	S
167.781	0.2560	0.0000	106.385	0.10034	0.36257	150673.5	53743.8	18895.8	S
167.796	0.2560	0.0000	106.385	0.10029	0.36246	150686.8	53749.1	18914.7	S
167.810	0.2560	0.0000	106.384	0.10024	0.36235	150700.2	53754.3	18933.6	S
167.825	0.2560	0.0000	106.384	0.10020	0.36223	150713.5	53759.5	18952.5	S
167.839	0.2560	0.0000	106.383	0.10015	0.36212	150726.9	53764.8	18971.4	S
167.854	0.2560	0.0000	106.383	0.10010	0.36201	150740.3	53770.0	18990.3	S
167.868	0.2560	0.0000	106.383	0.10005	0.36190	150753.6	53775.2	19009.1	S
167.883	0.2560	0.0000	106.382	0.10001	0.36178	150767.0	53780.4	19028.0	S
167.897	0.2560	0.0000	106.382	0.09996	0.36167	150780.3	53785.6	19046.9	S
167.912	0.2560	0.0000	106.381	0.09991	0.36156	150793.7	53790.8	19065.7	S
167.926	0.2560	0.0000	106.381	0.09986	0.36145	150807.0	53796.1	19084.6	S
167.941	0.2560	0.0000	106.380	0.09982	0.36133	150820.4	53801.3	19103.4	S
167.955	0.2560	0.0000	106.380	0.09977	0.36122	150833.7	53806.5	19122.3	S
167.970	0.2560	0.0000	106.379	0.09972	0.36111	150847.1	53811.7	19141.1	S
167.984	0.2560	0.0000	106.379	0.09968	0.36100	150860.4	53816.9	19160.0	S
167.999	0.2560	0.0000	106.379	0.09963	0.36089	150873.8	53822.1	19178.8	S
168.013	0.2532	0.0000	106.378	0.09957	0.36077	150887.0	53827.3	19197.6	S
168.028	0.2455	0.0000	106.378	0.09951	0.36066	150900.0	53832.5	19216.4	S
168.042	0.2304	0.0000	106.377	0.09941	0.36054	150912.5	53837.6	19235.2	S
168.057	0.2069	0.0000	106.377	0.09928	0.36040	150923.9	53842.8	19254.0	S
168.071	0.1814	0.0000	106.376	0.09916	0.36026	150934.0	53848.0	19272.8	S
168.086	0.1569	0.0000	106.375	0.09897	0.36010	150942.8	53853.2	19291.6	S
168.100	0.1355	0.0000	106.375	0.09876	0.35993	150950.4	53858.3	19310.4	S
168.115	0.1173	0.0000	106.374	0.09854	0.35974	150957.0	53863.5	19329.2	S
168.129	0.1020	0.0000	106.373	0.09831	0.35955	150962.8	53868.6	19347.9	S
168.144	0.0891	0.0000	106.373	0.09807	0.35935	150967.7	53873.7	19366.7	S
168.158	0.0782	0.0000	106.372	0.09783	0.35915	150972.1	53878.8	19385.4	S
168.173	0.0687	0.0000	106.371	0.09759	0.35894	150975.9	53883.9	19404.1	S
168.187	0.0604	0.0000	106.370	0.09735	0.35872	150979.3	53889.0	19422.9	S
168.202	0.0532	0.0000	106.369	0.09711	0.35850	150982.3	53894.1	19441.6	S
168.216	0.0463	0.0000	106.368	0.09687	0.35828	150984.9	53899.1	19460.3	S
168.231	0.0406	0.0000	106.367	0.09664	0.35805	150987.1	53904.2	19478.9	S
168.245	0.0354	0.0000	106.366	0.09641	0.35782	150989.1	53909.2	19497.6	S
168.260	0.0309	0.0000	106.366	0.09618	0.35759	150990.8	53914.3	19516.3	S
168.274	0.0268	0.0000	106.365	0.09596	0.35735	150992.3	53919.3	19534.9	S
168.288	0.0231	0.0000	106.364	0.09574	0.35712	150993.6	53924.3	19553.5	S
168.303	0.0199	0.0000	106.363	0.09553	0.35688	150994.8	53929.2	19572.2	S
168.317	0.0170	0.0000	106.362	0.09532	0.35664	150995.7	53934.2	19590.8	S

Detailed Results (cont,d.) *:: Scenario 7 :: FDOT 168 Hour - 168 hr - 100 yr*

Elapsed Time (hours)	Inflow Rate (ft³/s)	Outside Recharge (ft/day)	Stage Elevation (ft datum)	Infiltration Rate (ft³/s)	Overflow Discharge (ft³/s)	Cumulative Inflow Volume (ft³)	Cumulative Infiltration Volume (ft³)	Cumulative Discharge Volume (ft³)	Flow Type
168.332	0.0144	0.0000	106.361	0.09511	0.35639	150996.5	53939.2	19609.4	S
168.346	0.0121	0.0000	106.360	0.09491	0.35615	150997.2	53944.1	19627.9	S
168.361	0.0101	0.0000	106.359	0.09471	0.35591	150997.8	53949.1	19646.5	S
168.375	0.0084	0.0000	106.358	0.09451	0.35566	150998.3	53954.0	19665.1	S
168.390	0.0069	0.0000	106.357	0.09432	0.35541	150998.7	53959.0	19683.6	S
168.404	0.0056	0.0000	106.356	0.09414	0.35517	150999.0	53963.9	19702.2	S
168.419	0.0044	0.0000	106.355	0.09396	0.35492	150999.3	53968.8	19720.7	S
168.433	0.0035	0.0000	106.354	0.09378	0.35467	150999.5	53973.7	19739.2	S
168.448	0.0026	0.0000	106.353	0.09360	0.35442	150999.7	53978.6	19757.7	S
168.462	0.0019	0.0000	106.352	0.09343	0.35417	150999.8	53983.4	19776.2	S
168.477	0.0014	0.0000	106.351	0.09326	0.35392	150999.9	53988.3	19794.6	S
168.491	0.0009	0.0000	106.350	0.09310	0.35367	150999.9	53993.2	19813.1	S
168.506	0.0006	0.0000	106.349	0.09293	0.35342	151000.0	53998.0	19831.5	S
168.520	0.0003	0.0000	106.348	0.09277	0.35317	151000.0	54002.9	19849.9	S
168.535	0.0002	0.0000	106.347	0.09262	0.35292	151000.0	54007.7	19868.4	S
168.549	0.0001	0.0000	106.347	0.09247	0.35267	151000.0	54012.5	19886.8	S
168.564	0.0000	0.0000	106.346	0.09231	0.35242	151000.0	54017.3	19905.1	S
168.578	0.0000	0.0000	106.345	0.09217	0.35217	151000.0	54022.1	19923.5	S
168.593	0.0000	0.0000	106.344	0.09200	0.35192	151000.0	54027.0	19941.9	S
192.593	0.0000	0.0000	105.726	-0.02940	0.10390	151000.0	48612.6	39633.2	S
216.593	0.0000	0.0000	105.505	0.02620	0.00000	151000.0	48946.4	44121.5	S
240.593	0.0000	0.0000	105.308	0.04562	0.00000	151000.0	53139.4	44121.5	S
264.593	0.0000	0.0000	105.129	0.04037	0.00000	151000.0	56828.7	44121.5	S
288.593	0.0000	0.0000	104.966	0.03614	0.00000	151000.0	60115.3	44121.5	S
312.593	0.0000	0.0000	104.816	0.03266	0.00000	151000.0	63073.4	44121.5	S
336.593	0.0000	0.0000	104.677	0.02974	0.00000	151000.0	65758.3	44121.5	S
360.593	0.0000	0.0000	104.547	0.02725	0.00000	151000.0	68212.0	44121.5	S
384.593	0.0000	0.0000	104.426	0.02511	0.00000	151000.0	70467.6	44121.5	S
408.593	0.0000	0.0000	104.311	0.02324	0.00000	151000.0	72551.1	44121.5	S
432.593	0.0000	0.0000	104.203	0.02160	0.00000	151000.0	74483.8	44121.5	S
456.593	0.0000	0.0000	104.101	0.02014	0.00000	151000.0	76283.2	44121.5	S
480.593	0.0000	0.0000	104.004	0.01884	0.00000	151000.0	77964.1	44121.5	S
504.593	0.0000	0.0000	103.912	0.01767	0.00000	151000.0	79538.8	44121.5	S
528.593	0.0000	0.0000	103.824	0.01662	0.00000	151000.0	81018.1	44121.5	S
552.593	0.0000	0.0000	103.740	0.01567	0.00000	151000.0	82411.2	44121.5	S
576.593	0.0000	0.0000	103.659	0.01480	0.00000	151000.0	83726.0	44121.5	S
600.593	0.0000	0.0000	103.582	0.01401	0.00000	151000.0	84969.4	44121.5	S
624.593	0.0000	0.0000	103.508	0.01329	0.00000	151000.0	86147.5	44121.5	S
648.593	0.0000	0.0000	103.437	0.01262	0.00000	151000.0	87265.6	44121.5	S
672.593	0.0000	0.0000	103.368	0.01201	0.00000	151000.0	88328.4	44121.5	S
696.593	0.0000	0.0000	103.302	0.01144	0.00000	151000.0	89340.3	44121.5	S
720.593	0.0000	0.0000	103.238	0.01091	0.00000	151000.0	90304.9	44121.5	S
744.593	0.0000	0.0000	103.177	0.01042	0.00000	151000.0	91225.7	44121.5	S
768.593	0.0000	0.0000	103.117	0.00996	0.00000	151000.0	92105.6	44121.5	S
792.593	0.0000	0.0000	103.060	0.00954	0.00000	151000.0	92947.4	44121.5	S
816.593	0.0000	0.0000	103.004	0.00914	0.00000	151000.0	93753.7	44121.5	S
840.593	0.0000	0.0000	102.950	0.00877	0.00000	151000.0	94526.6	44121.5	S
864.593	0.0000	0.0000	102.898	0.00842	0.00000	151000.0	95268.4	44121.5	S
888.593	0.0000	0.0000	102.847	0.00809	0.00000	151000.0	95980.8	44121.5	S
912.593	0.0000	0.0000	102.798	----	----	151000.0	96665.6	44121.5	N.A.

Plot of Cumulative Volumes and Pond Stage vs Elapsed Time

Scenario 7 :: FDOT 168 Hour - 168 hr - 100 yr

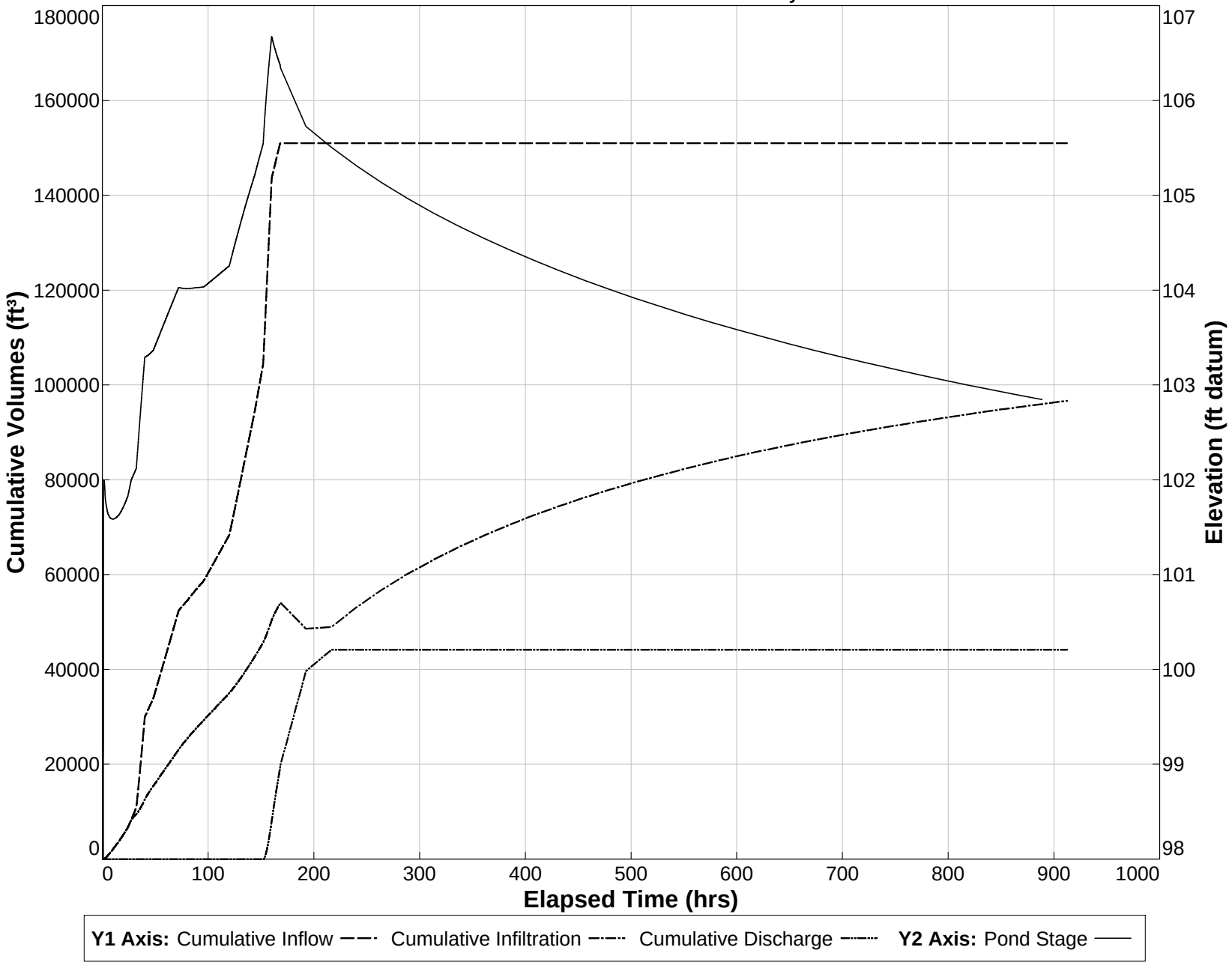

Detailed Results (cont,d.) *:: Scenario 8 :: FDOT 240 Hour - 240 hr - 100 yr*

Elapsed Time (hours)	Inflow Rate (ft³/s)	Outside Recharge (ft/day)	Stage Elevation (ft datum)	Infiltration Rate (ft³/s)	Overflow Discharge (ft³/s)	Cumulative Inflow Volume (ft³)	Cumulative Infiltration Volume (ft³)	Cumulative Discharge Volume (ft³)	Flow Type
238.024	0.0920	0.0000	105.671	0.06339	0.02866	171273.6	65355.1	44369.0	S
238.038	0.0920	0.0000	105.671	0.06338	0.02866	171278.4	65358.4	44370.5	S
238.052	0.0920	0.0000	105.671	0.06338	0.02866	171283.2	65361.7	44372.0	S
238.067	0.0920	0.0000	105.671	0.06338	0.02866	171288.0	65365.0	44373.5	S
238.081	0.0920	0.0000	105.671	0.06338	0.02866	171292.8	65368.3	44375.0	S
238.096	0.0920	0.0000	105.671	0.06338	0.02866	171297.6	65371.6	44376.5	S
238.110	0.0920	0.0000	105.671	0.06338	0.02866	171302.4	65374.9	44378.0	S
238.125	0.0920	0.0000	105.671	0.06338	0.02866	171307.2	65378.2	44379.5	S
238.139	0.0920	0.0000	105.671	0.06338	0.02866	171312.0	65381.5	44381.0	S
238.154	0.0920	0.0000	105.671	0.06338	0.02866	171316.8	65384.8	44382.5	S
238.168	0.0920	0.0000	105.671	0.06338	0.02866	171321.6	65388.1	44384.0	S
238.183	0.0920	0.0000	105.671	0.06338	0.02866	171326.4	65391.4	44385.4	S
238.197	0.0920	0.0000	105.671	0.06338	0.02866	171331.2	65394.8	44386.9	S
238.212	0.0920	0.0000	105.671	0.06338	0.02866	171336.0	65398.1	44388.4	S
238.226	0.0920	0.0000	105.671	0.06338	0.02866	171340.8	65401.4	44389.9	S
238.241	0.0920	0.0000	105.671	0.06338	0.02866	171345.6	65404.7	44391.4	S
238.255	0.0920	0.0000	105.671	0.06337	0.02866	171350.4	65408.0	44392.9	S
238.270	0.0920	0.0000	105.671	0.06337	0.02866	171355.2	65411.3	44394.4	S
238.284	0.0920	0.0000	105.671	0.06337	0.02866	171360.0	65414.6	44395.9	S
238.299	0.0920	0.0000	105.671	0.06337	0.02866	171364.8	65417.9	44397.4	S
238.313	0.0920	0.0000	105.671	0.06337	0.02866	171369.6	65421.2	44398.9	S
238.328	0.0920	0.0000	105.671	0.06337	0.02866	171374.4	65424.5	44400.4	S
238.342	0.0920	0.0000	105.671	0.06337	0.02865	171379.2	65427.8	44401.9	S
238.357	0.0920	0.0000	105.671	0.06337	0.02865	171384.0	65431.1	44403.4	S
238.371	0.0920	0.0000	105.671	0.06337	0.02865	171388.8	65434.4	44404.9	S
238.386	0.0920	0.0000	105.671	0.06337	0.02865	171393.6	65437.7	44406.4	S
238.400	0.0920	0.0000	105.671	0.06337	0.02865	171398.4	65441.0	44407.9	S
238.415	0.0920	0.0000	105.671	0.06337	0.02865	171403.2	65444.3	44409.4	S
238.429	0.0920	0.0000	105.671	0.06337	0.02865	171408.0	65447.6	44410.9	S
238.444	0.0920	0.0000	105.671	0.06337	0.02865	171412.8	65450.9	44412.3	S
238.458	0.0920	0.0000	105.671	0.06336	0.02865	171417.6	65454.3	44413.8	S
238.473	0.0920	0.0000	105.671	0.06336	0.02865	171422.4	65457.6	44415.3	S
238.487	0.0920	0.0000	105.671	0.06336	0.02865	171427.2	65460.9	44416.8	S
238.502	0.0920	0.0000	105.671	0.06336	0.02865	171432.0	65464.2	44418.3	S
238.516	0.0920	0.0000	105.671	0.06336	0.02865	171436.8	65467.5	44419.8	S
238.531	0.0920	0.0000	105.671	0.06336	0.02865	171441.6	65470.8	44421.3	S
238.545	0.0920	0.0000	105.671	0.06336	0.02865	171446.4	65474.1	44422.8	S
238.560	0.0920	0.0000	105.671	0.06336	0.02865	171451.2	65477.4	44424.3	S
238.574	0.0920	0.0000	105.671	0.06336	0.02865	171456.0	65480.7	44425.8	S
238.589	0.0920	0.0000	105.671	0.06336	0.02865	171460.8	65484.0	44427.3	S
238.603	0.0920	0.0000	105.671	0.06336	0.02865	171465.6	65487.3	44428.8	S
238.618	0.0920	0.0000	105.671	0.06336	0.02865	171470.4	65490.6	44430.3	S
238.632	0.0920	0.0000	105.671	0.06336	0.02865	171475.2	65493.9	44431.8	S
238.647	0.0920	0.0000	105.671	0.06335	0.02865	171480.0	65497.2	44433.3	S
238.661	0.0920	0.0000	105.671	0.06335	0.02865	171484.8	65500.5	44434.8	S
238.676	0.0920	0.0000	105.671	0.06335	0.02865	171489.5	65503.8	44436.3	S
238.690	0.0920	0.0000	105.671	0.06335	0.02865	171494.3	65507.1	44437.8	S
238.704	0.0920	0.0000	105.671	0.06335	0.02865	171499.2	65510.4	44439.3	S
238.719	0.0920	0.0000	105.671	0.06335	0.02865	171504.0	65513.7	44440.7	S
238.733	0.0920	0.0000	105.671	0.06335	0.02865	171508.8	65517.0	44442.2	S
238.748	0.0920	0.0000	105.671	0.06335	0.02865	171513.5	65520.3	44443.7	S
238.762	0.0920	0.0000	105.671	0.06335	0.02865	171518.3	65523.6	44445.2	S
238.777	0.0920	0.0000	105.671	0.06335	0.02865	171523.1	65527.0	44446.7	S
238.791	0.0920	0.0000	105.671	0.06335	0.02865	171527.9	65530.3	44448.2	S
238.806	0.0920	0.0000	105.671	0.06335	0.02865	171532.7	65533.6	44449.7	S
238.820	0.0920	0.0000	105.671	0.06335	0.02865	171537.5	65536.9	44451.2	S
238.835	0.0920	0.0000	105.671	0.06334	0.02865	171542.3	65540.2	44452.7	S
238.849	0.0920	0.0000	105.671	0.06334	0.02865	171547.1	65543.5	44454.2	S
238.864	0.0920	0.0000	105.671	0.06334	0.02865	171551.9	65546.8	44455.7	S
238.878	0.0920	0.0000	105.671	0.06334	0.02865	171556.7	65550.1	44457.2	S
238.893	0.0920	0.0000	105.671	0.06334	0.02865	171561.5	65553.4	44458.7	S
238.907	0.0920	0.0000	105.671	0.06334	0.02865	171566.3	65556.7	44460.2	S
238.922	0.0920	0.0000	105.671	0.06334	0.02865	171571.1	65560.0	44461.7	S
238.936	0.0920	0.0000	105.671	0.06334	0.02865	171575.9	65563.3	44463.2	S
238.951	0.0920	0.0000	105.671	0.06334	0.02865	171580.7	65566.6	44464.7	S
238.965	0.0920	0.0000	105.671	0.06334	0.02865	171585.5	65569.9	44466.1	S
238.980	0.0920	0.0000	105.671	0.06334	0.02865	171590.3	65573.2	44467.6	S
238.994	0.0920	0.0000	105.671	0.06333	0.02865	171595.1	65576.5	44469.1	S
239.009	0.0920	0.0000	105.671	0.06333	0.02865	171599.9	65579.8	44470.6	S
239.023	0.0920	0.0000	105.671	0.06333	0.02865	171604.7	65583.1	44472.1	S
239.038	0.0920	0.0000	105.671	0.06333	0.02865	171609.5	65586.4	44473.6	S
239.052	0.0920	0.0000	105.671	0.06333	0.02865	171614.3	65589.7	44475.1	S
239.067	0.0920	0.0000	105.671	0.06333	0.02865	171619.1	65593.0	44476.6	S
239.081	0.0920	0.0000	105.671	0.06333	0.02865	171623.9	65596.3	44478.1	S

Detailed Results (cont,d.) *:: Scenario 8 :: FDOT 240 Hour - 240 hr - 100 yr*

Elapsed Time (hours)	Inflow Rate (ft³/s)	Outside Recharge (ft/day)	Stage Elevation (ft datum)	Infiltration Rate (ft³/s)	Overflow Discharge (ft³/s)	Cumulative Inflow Volume (ft³)	Cumulative Infiltration Volume (ft³)	Cumulative Discharge Volume (ft³)	Flow Type
239.096	0.0920	0.0000	105.671	0.06333	0.02865	171628.7	65599.6	44479.6	S
239.110	0.0920	0.0000	105.671	0.06333	0.02865	171633.5	65602.9	44481.1	S
239.125	0.0920	0.0000	105.671	0.06333	0.02865	171638.3	65606.2	44482.6	S
239.139	0.0920	0.0000	105.671	0.06333	0.02865	171643.1	65609.5	44484.1	S
239.154	0.0920	0.0000	105.671	0.06333	0.02865	171647.9	65612.8	44485.6	S
239.168	0.0920	0.0000	105.671	0.06332	0.02865	171652.7	65616.2	44487.1	S
239.183	0.0920	0.0000	105.671	0.06332	0.02865	171657.5	65619.5	44488.6	S
239.197	0.0920	0.0000	105.671	0.06332	0.02865	171662.3	65622.8	44490.1	S
239.212	0.0920	0.0000	105.671	0.06332	0.02865	171667.1	65626.1	44491.6	S
239.226	0.0920	0.0000	105.671	0.06332	0.02865	171671.9	65629.4	44493.1	S
239.241	0.0920	0.0000	105.671	0.06332	0.02865	171676.7	65632.7	44494.5	S
239.255	0.0920	0.0000	105.671	0.06332	0.02865	171681.5	65636.0	44496.0	S
239.270	0.0920	0.0000	105.671	0.06332	0.02865	171686.3	65639.3	44497.5	S
239.284	0.0920	0.0000	105.671	0.06332	0.02865	171691.1	65642.6	44499.0	S
239.299	0.0920	0.0000	105.671	0.06332	0.02865	171695.9	65645.9	44500.5	S
239.313	0.0920	0.0000	105.671	0.06331	0.02865	171700.7	65649.2	44502.0	S
239.328	0.0920	0.0000	105.671	0.06331	0.02865	171705.5	65652.5	44503.5	S
239.342	0.0920	0.0000	105.671	0.06331	0.02865	171710.3	65655.8	44505.0	S
239.356	0.0920	0.0000	105.671	0.06331	0.02865	171715.1	65659.1	44506.5	S
239.371	0.0920	0.0000	105.671	0.06331	0.02865	171719.9	65662.4	44508.0	S
239.385	0.0920	0.0000	105.671	0.06331	0.02866	171724.7	65665.7	44509.5	S
239.400	0.0920	0.0000	105.671	0.06331	0.02866	171729.5	65669.0	44511.0	S
239.414	0.0920	0.0000	105.671	0.06331	0.02866	171734.3	65672.3	44512.5	S
239.429	0.0920	0.0000	105.671	0.06331	0.02866	171739.1	65675.6	44514.0	S
239.443	0.0920	0.0000	105.671	0.06331	0.02866	171743.9	65678.9	44515.5	S
239.458	0.0920	0.0000	105.671	0.06331	0.02866	171748.7	65682.2	44517.0	S
239.472	0.0920	0.0000	105.671	0.06330	0.02866	171753.5	65685.5	44518.5	S
239.487	0.0920	0.0000	105.671	0.06330	0.02866	171758.3	65688.8	44520.0	S
239.501	0.0920	0.0000	105.671	0.06330	0.02866	171763.1	65692.1	44521.5	S
239.516	0.0920	0.0000	105.671	0.06330	0.02866	171767.9	65695.4	44522.9	S
239.530	0.0920	0.0000	105.671	0.06330	0.02866	171772.7	65698.7	44524.4	S
239.545	0.0920	0.0000	105.671	0.06330	0.02866	171777.5	65702.0	44525.9	S
239.559	0.0920	0.0000	105.671	0.06330	0.02866	171782.3	65705.3	44527.4	S
239.574	0.0920	0.0000	105.671	0.06330	0.02866	171787.1	65708.6	44528.9	S
239.588	0.0920	0.0000	105.671	0.06330	0.02866	171791.9	65711.9	44530.4	S
239.603	0.0920	0.0000	105.671	0.06330	0.02866	171796.7	65715.2	44531.9	S
239.617	0.0920	0.0000	105.671	0.06329	0.02866	171801.5	65718.5	44533.4	S
239.632	0.0920	0.0000	105.671	0.06329	0.02866	171806.3	65721.8	44534.9	S
239.646	0.0920	0.0000	105.671	0.06329	0.02866	171811.0	65725.1	44536.4	S
239.661	0.0920	0.0000	105.671	0.06329	0.02866	171815.8	65728.4	44537.9	S
239.675	0.0920	0.0000	105.671	0.06329	0.02866	171820.6	65731.7	44539.4	S
239.690	0.0920	0.0000	105.671	0.06329	0.02866	171825.5	65735.0	44540.9	S
239.704	0.0920	0.0000	105.671	0.06329	0.02866	171830.3	65738.3	44542.4	S
239.719	0.0920	0.0000	105.671	0.06329	0.02866	171835.0	65741.6	44543.9	S
239.733	0.0920	0.0000	105.671	0.06329	0.02866	171839.8	65744.9	44545.4	S
239.748	0.0920	0.0000	105.671	0.06329	0.02866	171844.6	65748.2	44546.9	S
239.762	0.0920	0.0000	105.671	0.06328	0.02866	171849.4	65751.5	44548.4	S
239.777	0.0920	0.0000	105.671	0.06328	0.02866	171854.2	65754.8	44549.9	S
239.791	0.0920	0.0000	105.671	0.06328	0.02866	171859.0	65758.1	44551.3	S
239.806	0.0920	0.0000	105.671	0.06328	0.02866	171863.8	65761.4	44552.8	S
239.820	0.0920	0.0000	105.671	0.06328	0.02866	171868.6	65764.7	44554.3	S
239.835	0.0920	0.0000	105.671	0.06328	0.02867	171873.4	65768.0	44555.8	S
239.849	0.0920	0.0000	105.671	0.06328	0.02867	171878.2	65771.3	44557.3	S
239.864	0.0920	0.0000	105.671	0.06328	0.02867	171883.0	65774.6	44558.8	S
239.878	0.0920	0.0000	105.671	0.06328	0.02867	171887.8	65777.9	44560.3	S
239.893	0.0920	0.0000	105.671	0.06327	0.02867	171892.6	65781.2	44561.8	S
239.907	0.0920	0.0000	105.671	0.06327	0.02867	171897.4	65784.5	44563.3	S
239.922	0.0920	0.0000	105.671	0.06327	0.02867	171902.2	65787.8	44564.8	S
239.936	0.0920	0.0000	105.671	0.06327	0.02867	171907.0	65791.1	44566.3	S
239.951	0.0920	0.0000	105.671	0.06327	0.02867	171911.8	65794.4	44567.8	S
239.965	0.0920	0.0000	105.671	0.06327	0.02867	171916.6	65797.7	44569.3	S
239.980	0.0920	0.0000	105.671	0.06327	0.02867	171921.4	65801.0	44570.8	S
239.994	0.0920	0.0000	105.671	0.06327	0.02867	171926.2	65804.3	44572.3	S
240.008	0.0914	0.0000	105.671	0.06325	0.02867	171931.0	65807.6	44573.8	S
240.023	0.0892	0.0000	105.671	0.06323	0.02866	171935.7	65810.9	44575.3	S
240.037	0.0846	0.0000	105.671	0.06317	0.02862	171940.2	65814.2	44576.8	S
240.052	0.0772	0.0000	105.671	0.06313	0.02854	171944.5	65817.5	44578.3	S
240.066	0.0682	0.0000	105.671	0.06303	0.02839	171948.3	65820.8	44579.7	S
240.081	0.0592	0.0000	105.671	0.06293	0.02818	171951.6	65824.1	44581.2	S
240.095	0.0512	0.0000	105.671	0.06288	0.02791	171954.5	65827.4	44582.7	S
240.110	0.0442	0.0000	105.671	0.06279	0.02757	171956.9	65830.7	44584.1	S
240.124	0.0384	0.0000	105.671	0.06272	0.02718	171959.1	65833.9	44585.6	S
240.139	0.0335	0.0000	105.671	0.06264	0.02675	171961.0	65837.2	44587.0	S
240.153	0.0294	0.0000	105.671	0.06255	0.02628	171962.6	65840.5	44588.3	S

Detailed Results (cont,d.) *:: Scenario 8 :: FDOT 240 Hour - 240 hr - 100 yr*

Elapsed Time (hours)	Inflow Rate (ft³/s)	Outside Recharge (ft/day)	Stage Elevation (ft datum)	Infiltration Rate (ft³/s)	Overflow Discharge (ft³/s)	Cumulative Inflow Volume (ft³)	Cumulative Infiltration Volume (ft³)	Cumulative Discharge Volume (ft³)	Flow Type
240.168	0.0258	0.0000	105.670	0.06249	0.02577	171964.1	65843.7	44589.7	S
240.182	0.0227	0.0000	105.670	0.06240	0.02523	171965.3	65847.0	44591.0	S
240.197	0.0199	0.0000	105.670	0.06232	0.02466	171966.4	65850.2	44592.3	S
240.211	0.0174	0.0000	105.670	0.06224	0.02406	171967.4	65853.5	44593.6	S
240.226	0.0152	0.0000	105.670	0.06215	0.02342	171968.3	65856.7	44594.8	S
240.240	0.0133	0.0000	105.670	0.06208	0.02275	171969.0	65860.0	44596.0	S
240.255	0.0116	0.0000	105.669	0.06200	0.02206	171969.7	65863.2	44597.2	S
240.269	0.0101	0.0000	105.669	0.06192	0.02133	171970.2	65866.4	44598.3	S
240.284	0.0087	0.0000	105.669	0.06185	0.02057	171970.7	65869.7	44599.4	S
240.298	0.0075	0.0000	105.669	0.06178	0.01978	171971.1	65872.9	44600.5	S
240.313	0.0064	0.0000	105.669	0.06170	0.01895	171971.5	65876.1	44601.5	S
240.327	0.0055	0.0000	105.669	0.06163	0.01808	171971.8	65879.3	44602.5	S
240.342	0.0046	0.0000	105.668	0.06156	0.01717	171972.1	65882.5	44603.4	S
240.356	0.0039	0.0000	105.668	0.06149	0.01621	171972.3	65885.7	44604.3	S
240.371	0.0032	0.0000	105.668	0.06141	0.01519	171972.5	65889.0	44605.1	S
240.385	0.0027	0.0000	105.668	0.06133	0.01411	171972.6	65892.2	44605.8	S
240.400	0.0022	0.0000	105.668	0.06124	0.01295	171972.8	65895.4	44606.5	S
240.414	0.0017	0.0000	105.668	0.06114	0.01169	171972.9	65898.5	44607.2	S
240.429	0.0014	0.0000	105.667	0.06103	0.01030	171972.9	65901.7	44607.8	S
240.443	0.0010	0.0000	105.667	0.06086	0.00872	171973.0	65904.9	44608.3	S
240.458	0.0008	0.0000	105.667	0.06056	0.00682	171973.0	65908.1	44608.7	S
240.472	0.0006	0.0000	105.667	0.06007	0.00416	171973.1	65911.2	44609.0	S
240.487	0.0004	0.0000	105.667	0.06064	0.00036	171973.1	65914.3	44609.1	S
240.501	0.0002	0.0000	105.667	0.06157	0.00000	171973.1	65917.6	44609.1	S
240.516	0.0001	0.0000	105.666	0.06164	0.00000	171973.1	65920.8	44609.1	S
240.530	0.0001	0.0000	105.666	0.06162	0.00000	171973.1	65924.0	44609.1	S
240.545	0.0000	0.0000	105.666	0.06160	0.00000	171973.1	65927.2	44609.1	S
240.559	0.0000	0.0000	105.666	0.06158	0.00000	171973.1	65930.4	44609.1	S
240.574	0.0000	0.0000	105.666	0.06156	0.00000	171973.1	65933.6	44609.1	S
240.588	0.0000	0.0000	105.666	0.06154	0.00000	171973.1	65936.8	44609.1	S
264.588	0.0000	0.0000	105.463	0.04765	0.00000	171973.1	70338.9	44609.1	S
288.588	0.0000	0.0000	105.282	0.04188	0.00000	171973.1	74171.0	44609.1	S
312.588	0.0000	0.0000	105.116	0.03743	0.00000	171973.1	77575.8	44609.1	S
336.588	0.0000	0.0000	104.964	0.03383	0.00000	171973.1	80639.7	44609.1	S
360.588	0.0000	0.0000	104.823	0.03083	0.00000	171973.1	83422.3	44609.1	S
384.588	0.0000	0.0000	104.692	0.02828	0.00000	171973.1	85967.6	44609.1	S
408.588	0.0000	0.0000	104.568	0.02608	0.00000	171973.1	88309.3	44609.1	S
432.588	0.0000	0.0000	104.452	0.02416	0.00000	171973.1	90474.1	44609.1	S
456.588	0.0000	0.0000	104.342	0.02246	0.00000	171973.1	92483.5	44609.1	S
480.588	0.0000	0.0000	104.238	0.02096	0.00000	171973.1	94355.4	44609.1	S
504.588	0.0000	0.0000	104.139	0.01961	0.00000	171973.1	96104.9	44609.1	S
528.588	0.0000	0.0000	104.045	0.01841	0.00000	171973.1	97744.5	44609.1	S
552.588	0.0000	0.0000	103.955	0.01732	0.00000	171973.1	99285.3	44609.1	S
576.588	0.0000	0.0000	103.870	0.01633	0.00000	171973.1	100736.6	44609.1	S
600.588	0.0000	0.0000	103.787	0.01543	0.00000	171973.1	102106.7	44609.1	S
624.588	0.0000	0.0000	103.709	0.01461	0.00000	171973.1	103402.7	44609.1	S
648.588	0.0000	0.0000	103.633	0.01385	0.00000	171973.1	104630.9	44609.1	S
672.588	0.0000	0.0000	103.560	0.01316	0.00000	171973.1	105796.8	44609.1	S
696.588	0.0000	0.0000	103.490	0.01252	0.00000	171973.1	106905.4	44609.1	S
720.588	0.0000	0.0000	103.423	0.01193	0.00000	171973.1	107960.9	44609.1	S
744.588	0.0000	0.0000	103.358	0.01138	0.00000	171973.1	108967.2	44609.1	S
768.588	0.0000	0.0000	103.295	0.01087	0.00000	171973.1	109928.0	44609.1	S
792.588	0.0000	0.0000	103.235	0.01040	0.00000	171973.1	110846.3	44609.1	S
816.588	0.0000	0.0000	103.176	0.00995	0.00000	171973.1	111724.9	44609.1	S
840.588	0.0000	0.0000	103.119	0.00954	0.00000	171973.1	112566.5	44609.1	S
864.588	0.0000	0.0000	103.064	0.00915	0.00000	171973.1	113373.3	44609.1	S
888.588	0.0000	0.0000	103.011	0.00878	0.00000	171973.1	114147.6	44609.1	S
912.588	0.0000	0.0000	102.959	0.00844	0.00000	171973.1	114891.3	44609.1	S
936.588	0.0000	0.0000	102.908	0.00812	0.00000	171973.1	115606.1	44609.1	S
960.588	0.0000	0.0000	102.860	0.00781	0.00000	171973.1	116293.9	44609.1	S
984.588	0.0000	0.0000	102.812	----	----	171973.1	116956.2	44609.1	N.A.

Plot of Cumulative Volumes and Pond Stage vs Elapsed Time

Scenario 8 :: FDOT 240 Hour - 240 hr - 100 yr

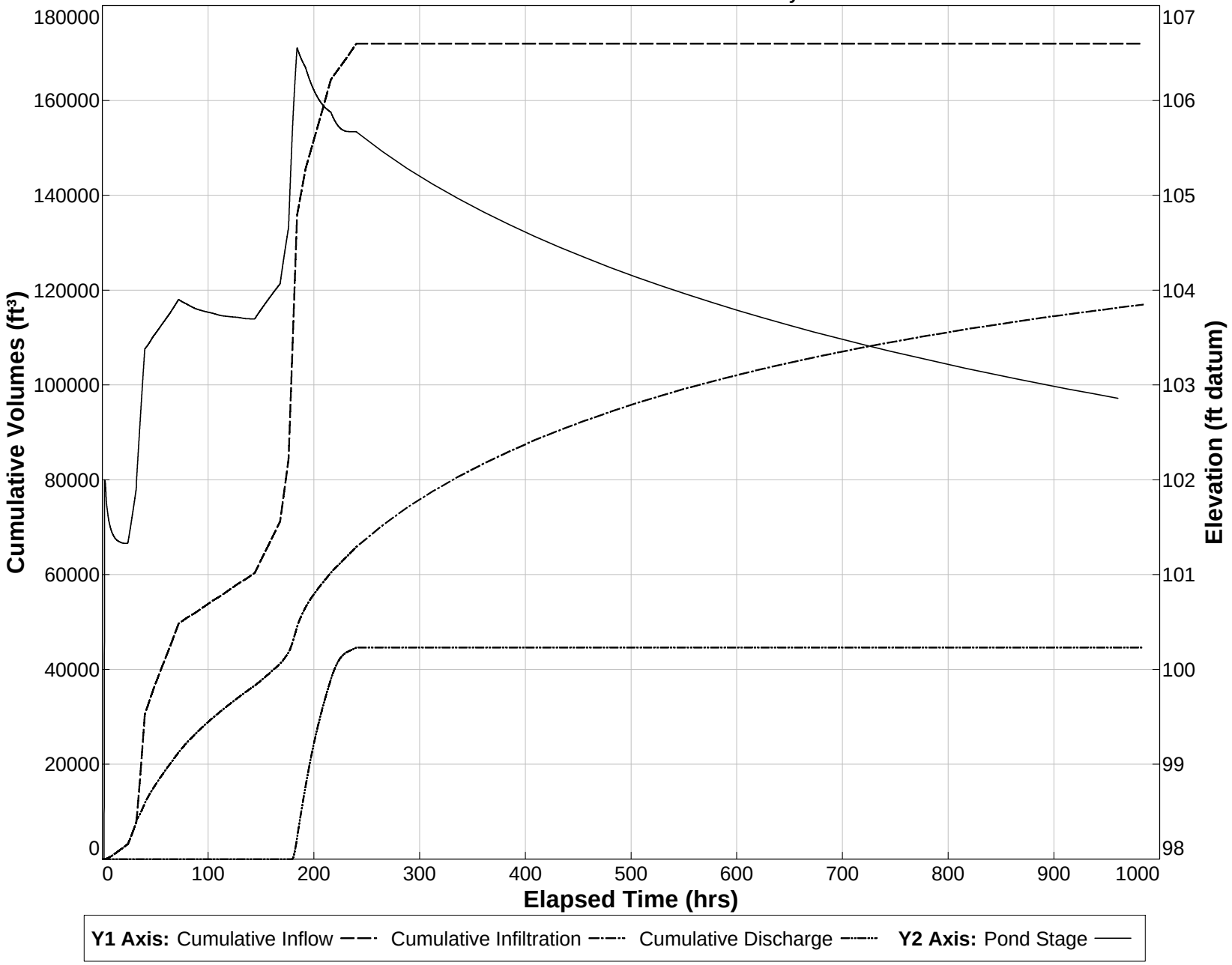

PONDS Version 3.2.0239
Retention Pond Recovery - Refined Method
Copyright 2011
Devo Seereeram, Ph.D., P.E.

Project Data

Project Name:	Holiday Inn Alachua
Simulation Description:	Back to Back for 100yr-24hr Storm
Project Number:	
Engineer :	
Supervising Engineer:	
Date:	12-05-2016

Aquifer Data

Base Of Aquifer Elevation, [B] (ft datum):	97.95
Water Table Elevation, [WT] (ft datum):	98.00
Horizontal Saturated Hydraulic Conductivity, [Kh] (ft/day):	10.00
Fillable Porosity, [n] (%):	25.00
Unsaturated Vertical Infiltration Rate, [Iv] (ft/day):	22995.16
Maximum Area For Unsaturated Infiltration, [Av] (ft^2):	7.5

Geometry Data

Equivalent Pond Length, [L] (ft):	345.3
Equivalent Pond Width, [W] (ft):	57.0

Ground water mound is expected to intersect the pond bottom

Stage vs Area Data

Stage (ft datum)	Area (ft^2)
102.33	11735.6
103.00	14396.1
103.02	14451.3
104.00	17160.8
105.00	20027.7
106.00	22995.2
107.00	26062.9
108.00	29230.9

Scenario Input Data

Scenario 1 :: FDOT 24 Hour - 24 hr - 100 yr

Hydrograph Type:	Inline SCS
Modflow Routing:	Routed with infiltration
Repetitions:	1

Basin Area (acres)	2.930
Time Of Concentration (minutes)	6.5
DCIA (%)	57.0
Curve Number	71.4
Design Rainfall Depth (inches)	11.0
Design Rainfall Duration (hours)	24.0
Shape Factor	UHG 323
Rainfall Distribution	FDOT 24 Hour

Initial ground water level (ft datum) 98.00 (default)

Time After Storm Event (days)	Time After Storm Event (days)	Time After Storm Event (days)	Time After Storm Event (days)	Time After Storm Event (days)
1.000	8.000	15.000	22.000	29.000
2.000	9.000	16.000	23.000	30.000
3.000	10.000	17.000	24.000	31.000
4.000	11.000	18.000	25.000	
5.000	12.000	19.000	26.000	
6.000	13.000	20.000	27.000	
7.000	14.000	21.000	28.000	

Worst Case Scenarios

Selection Criteria: <default - All scenarios with valid results>

Maximum Stage = 106.5435 ft datum

For scenario 1 at Time = 24.06604 hours
Scenario Description: FDOT 24 Hour - 24 hr - 100 yr

Scenarios considered: 1 to 1

Summary of Results *:: Scenario 1 :: FDOT 24 Hour - 24 hr - 100 yr*

	Time (hours)	Stage (ft datum)	Rate (ft^3/s)	Volume (ft^3)
Stage				
Minimum	0.000	98.00		
Maximum	24.066	106.54		
Inflow				
Rate - Maximum - Positive	11.997		2.9890	
Rate - Maximum - Negative	None		None	
Cumulative Volume - Maximum Positive	24.544			99427.3
Cumulative Volume - Maximum Negative	None			None
Cumulative Volume - End of Simulation	768.588			99427.3
Infiltration				
Rate - Maximum - Positive	2.463		0.4932	
Rate - Maximum - Negative	None		None	
Cumulative Volume - Maximum Positive	768.588			96851.9
Cumulative Volume - Maximum Negative	None			None
Cumulative Volume - End of Simulation	768.588			96851.9
Combined Discharge				
Rate - Maximum - Positive	None		None	
Rate - Maximum - Negative	None		None	
Cumulative Volume - Maximum Positive	None			None
Cumulative Volume - Maximum Negative	None			None
Cumulative Volume - End of Simulation	768.588			0.0
Discharge Structure 1 - simple weir				
Rate - Maximum - Positive	None		None	
Rate - Maximum - Negative	None		None	
Cumulative Volume - Maximum Positive	None			None
Cumulative Volume - Maximum Negative	None			None
Cumulative Volume - End of Simulation	768.588			0.0
Discharge Structure 2 - inactive				
Rate - Maximum - Positive	disabled		disabled	
Rate - Maximum - Negative	disabled		disabled	
Cumulative Volume - Maximum Positive	disabled			disabled
Cumulative Volume - Maximum Negative	disabled			disabled
Cumulative Volume - End of Simulation	disabled			disabled
Discharge Structure 3 - inactive				
Rate - Maximum - Positive	disabled		disabled	
Rate - Maximum - Negative	disabled		disabled	
Cumulative Volume - Maximum Positive	disabled			disabled
Cumulative Volume - Maximum Negative	disabled			disabled
Cumulative Volume - End of Simulation	disabled			disabled
Pollution Abatement:				
36 Hour Stage and Infiltration Volume	N.A.	N.A.		N.A.
72 Hour Stage and Infiltration Volume	N.A.	N.A.		N.A.

PONDS Version 3.2.0239
Retention Pond Recovery - Refined Method
Copyright 2011
Devo Seereeram, Ph.D., P.E.

Project Data

Project Name:	Holiday Inn Alachua
Simulation Description:	Back to Back for 100yr-72hr Storm
Project Number:	
Engineer :	
Supervising Engineer:	
Date:	12-05-2016

Aquifer Data

Base Of Aquifer Elevation, [B] (ft datum):	97.95
Water Table Elevation, [WT] (ft datum):	98.00
Horizontal Saturated Hydraulic Conductivity, [Kh] (ft/day):	10.00
Fillable Porosity, [n] (%):	25.00
Unsaturated Vertical Infiltration Rate, [Iv] (ft/day):	22995.16
Maximum Area For Unsaturated Infiltration, [Av] (ft^2):	7.5

Geometry Data

Equivalent Pond Length, [L] (ft):	345.3
Equivalent Pond Width, [W] (ft):	57.0

Ground water mound is expected to intersect the pond bottom

Stage vs Area Data

Stage (ft datum)	Area (ft^2)
102.58	11735.6
103.00	14396.1
103.02	14451.3
104.00	17160.8
105.00	20027.7
106.00	22995.2
107.00	26062.9
108.00	29230.9

Scenario Input Data

Scenario 2 :: FDOT 72 Hour - 72 hr - 100 yr

Hydrograph Type:	Inline SCS
Modflow Routing:	Routed with infiltration
Repetitions:	1

Basin Area (acres)	2.930
Time Of Concentration (minutes)	6.5
DCIA (%)	57.0
Curve Number	71.4
Design Rainfall Depth (inches)	13.8
Design Rainfall Duration (hours)	72.0
Shape Factor	UHG 323
Rainfall Distribution	FDOT 72 Hour

Initial ground water level (ft datum) 98.00 (default)

Time After Storm Event (days)	Time After Storm Event (days)	Time After Storm Event (days)	Time After Storm Event (days)	Time After Storm Event (days)
1.000	8.000	15.000	22.000	29.000
2.000	9.000	16.000	23.000	30.000
3.000	10.000	17.000	24.000	31.000
4.000	11.000	18.000	25.000	
5.000	12.000	19.000	26.000	
6.000	13.000	20.000	27.000	
7.000	14.000	21.000	28.000	

Worst Case Scenarios

Selection Criteria: <default - All scenarios with valid results>

Maximum Stage = 106.9146 ft datum

For scenario 2 at Time = 64.11333 hours
Scenario Description: FDOT 72 Hour - 72 hr - 100 yr

Scenarios considered: 2 to 2

Summary of Results *:: Scenario 2 :: FDOT 72 Hour - 72 hr - 100 yr*

	Time (hours)	Stage (ft datum)	Rate (ft^3/s)	Volume (ft^3)
Stage				
Minimum	0.000	98.00		
Maximum	64.113	106.91		
Inflow				
Rate - Maximum - Positive	59.984		1.9598	
Rate - Maximum - Negative	None		None	
Cumulative Volume - Maximum Positive	72.546			128028.3
Cumulative Volume - Maximum Negative	None			None
Cumulative Volume - End of Simulation	816.589			128028.3
Infiltration				
Rate - Maximum - Positive	9.085		0.6603	
Rate - Maximum - Negative	None		None	
Cumulative Volume - Maximum Positive	816.589			112385.6
Cumulative Volume - Maximum Negative	None			None
Cumulative Volume - End of Simulation	816.589			112385.6
Combined Discharge				
Rate - Maximum - Positive	64.113		0.5227	
Rate - Maximum - Negative	None		None	
Cumulative Volume - Maximum Positive	96.589			10182.5
Cumulative Volume - Maximum Negative	None			None
Cumulative Volume - End of Simulation	816.589			10182.5
Discharge Structure 1 - simple weir				
Rate - Maximum - Positive	64.113		0.5227	
Rate - Maximum - Negative	None		None	
Cumulative Volume - Maximum Positive	96.589			10182.5
Cumulative Volume - Maximum Negative	None			None
Cumulative Volume - End of Simulation	816.589			10182.5
Discharge Structure 2 - inactive				
Rate - Maximum - Positive	disabled		disabled	
Rate - Maximum - Negative	disabled		disabled	
Cumulative Volume - Maximum Positive	disabled			disabled
Cumulative Volume - Maximum Negative	disabled			disabled
Cumulative Volume - End of Simulation	disabled			disabled
Discharge Structure 3 - inactive				
Rate - Maximum - Positive	disabled		disabled	
Rate - Maximum - Negative	disabled		disabled	
Cumulative Volume - Maximum Positive	disabled			disabled
Cumulative Volume - Maximum Negative	disabled			disabled
Cumulative Volume - End of Simulation	disabled			disabled
Pollution Abatement:				
36 Hour Stage and Infiltration Volume	N.A.	N.A.		N.A.
72 Hour Stage and Infiltration Volume	N.A.	N.A.		N.A.

PONDS Version 3.2.0239
Retention Pond Recovery - Refined Method
Copyright 2011
Devo Seereeram, Ph.D., P.E.

Project Data

Project Name:	Holiday Inn Alachua
Simulation Description:	Back to Back for 100yr-168hr Storm
Project Number:	
Engineer :	
Supervising Engineer:	
Date:	12-05-2016

Aquifer Data

Base Of Aquifer Elevation, [B] (ft datum):	97.95
Water Table Elevation, [WT] (ft datum):	98.00
Horizontal Saturated Hydraulic Conductivity, [Kh] (ft/day):	10.00
Fillable Porosity, [n] (%):	25.00
Unsaturated Vertical Infiltration Rate, [Iv] (ft/day):	22995.16
Maximum Area For Unsaturated Infiltration, [Av] (ft^2):	7.5

Geometry Data

Equivalent Pond Length, [L] (ft):	345.3
Equivalent Pond Width, [W] (ft):	57.0

Ground water mound is expected to intersect the pond bottom

Stage vs Area Data

Stage (ft datum)	Area (ft^2)
102.85	11735.6
103.00	14396.1
103.02	14451.3
104.00	17160.8
105.00	20027.7
106.00	22995.2
107.00	26062.9
108.00	29230.9

Scenario Input Data

Scenario 3 :: FDOT 168 Hour - 168 hr - 100 yr

Hydrograph Type:	Inline SCS
Modflow Routing:	Routed with infiltration
Repetitions:	1

Basin Area (acres)	2.930
Time Of Concentration (minutes)	6.5
DCIA (%)	57.0
Curve Number	71.4
Design Rainfall Depth (inches)	16.0
Design Rainfall Duration (hours)	168.0
Shape Factor	UHG 323
Rainfall Distribution	FDOT 168 Hour

Initial ground water level (ft datum) 98.00 (default)

Time After Storm Event (days)	Time After Storm Event (days)	Time After Storm Event (days)	Time After Storm Event (days)	Time After Storm Event (days)
1.000	8.000	15.000	22.000	29.000
2.000	9.000	16.000	23.000	30.000
3.000	10.000	17.000	24.000	31.000
4.000	11.000	18.000	25.000	
5.000	12.000	19.000	26.000	
6.000	13.000	20.000	27.000	
7.000	14.000	21.000	28.000	

Worst Case Scenarios

Selection Criteria: <default - All scenarios with valid results>

Maximum Stage = 107.0011 ft datum

For scenario 3 at Time = 160.0588 hours
Scenario Description: FDOT 168 Hour - 168 hr - 100 yr

Scenarios considered: 3 to 3

Summary of Results *:: Scenario 3 :: FDOT 168 Hour - 168 hr - 100 yr*

	Time (hours)	Stage (ft datum)	Rate (ft^3/s)	Volume (ft^3)
Stage				
Minimum	0.000	98.00		
Maximum	160.059	107.00		
Inflow				
Rate - Maximum - Positive	160.001		1.3649	
Rate - Maximum - Negative	None		None	
Cumulative Volume - Maximum Positive	168.549			151000.0
Cumulative Volume - Maximum Negative	None			None
Cumulative Volume - End of Simulation	912.593			151000.0
Infiltration				
Rate - Maximum - Positive	32.513		0.6012	
Rate - Maximum - Negative	None		None	
Cumulative Volume - Maximum Positive	912.593			125474.6
Cumulative Volume - Maximum Negative	None			None
Cumulative Volume - End of Simulation	912.593			125474.6
Combined Discharge				
Rate - Maximum - Positive	160.059		0.9840	
Rate - Maximum - Negative	None		None	
Cumulative Volume - Maximum Positive	192.593			18951.2
Cumulative Volume - Maximum Negative	None			None
Cumulative Volume - End of Simulation	912.593			18951.2
Discharge Structure 1 - simple weir				
Rate - Maximum - Positive	160.059		0.9840	
Rate - Maximum - Negative	None		None	
Cumulative Volume - Maximum Positive	192.593			18951.2
Cumulative Volume - Maximum Negative	None			None
Cumulative Volume - End of Simulation	912.593			18951.2
Discharge Structure 2 - inactive				
Rate - Maximum - Positive	disabled		disabled	
Rate - Maximum - Negative	disabled		disabled	
Cumulative Volume - Maximum Positive	disabled			disabled
Cumulative Volume - Maximum Negative	disabled			disabled
Cumulative Volume - End of Simulation	disabled			disabled
Discharge Structure 3 - inactive				
Rate - Maximum - Positive	disabled		disabled	
Rate - Maximum - Negative	disabled		disabled	
Cumulative Volume - Maximum Positive	disabled			disabled
Cumulative Volume - Maximum Negative	disabled			disabled
Cumulative Volume - End of Simulation	disabled			disabled
Pollution Abatement:				
36 Hour Stage and Infiltration Volume	N.A.	N.A.		N.A.
72 Hour Stage and Infiltration Volume	N.A.	N.A.		N.A.

PONDS Version 3.2.0239
Retention Pond Recovery - Refined Method
Copyright 2011
Devo Seereeram, Ph.D., P.E.

Project Data

Project Name:	Holiday Inn Alachua
Simulation Description:	Back to Back for 100yr-240hr Storm
Project Number:	
Engineer :	
Supervising Engineer:	
Date:	12-05-2016

Aquifer Data

Base Of Aquifer Elevation, [B] (ft datum):	97.95
Water Table Elevation, [WT] (ft datum):	98.00
Horizontal Saturated Hydraulic Conductivity, [Kh] (ft/day):	10.00
Fillable Porosity, [n] (%):	25.00
Unsaturated Vertical Infiltration Rate, [Iv] (ft/day):	22995.16
Maximum Area For Unsaturated Infiltration, [Av] (ft^2):	7.5

Geometry Data

Equivalent Pond Length, [L] (ft):	345.3
Equivalent Pond Width, [W] (ft):	57.0

Ground water mound is expected to intersect the pond bottom

Stage vs Area Data

Stage (ft datum)	Area (ft^2)
102.86	11735.6
103.00	14396.1
103.02	14451.3
104.00	17160.8
105.00	20027.7
106.00	22995.2
107.00	26062.9
108.00	29230.9

Scenario Input Data

Scenario 4 :: FDOT 240 Hour - 240 hr - 100 yr

Hydrograph Type:	Inline SCS
Modflow Routing:	Routed with infiltration
Repetitions:	1

Basin Area (acres)	2.930
Time Of Concentration (minutes)	6.5
DCIA (%)	57.0
Curve Number	71.4
Design Rainfall Depth (inches)	18.0
Design Rainfall Duration (hours)	240.0
Shape Factor	UHG 323
Rainfall Distribution	FDOT 240 Hour

Initial ground water level (ft datum) 98.00 (default)

Time After Storm Event (days)	Time After Storm Event (days)	Time After Storm Event (days)	Time After Storm Event (days)	Time After Storm Event (days)
1.000	8.000	15.000	22.000	29.000
2.000	9.000	16.000	23.000	30.000
3.000	10.000	17.000	24.000	31.000
4.000	11.000	18.000	25.000	
5.000	12.000	19.000	26.000	
6.000	13.000	20.000	27.000	
7.000	14.000	21.000	28.000	

Worst Case Scenarios

Selection Criteria: <default - All scenarios with valid results>

Maximum Stage = 106.9297 ft datum

For scenario 4 at Time = 184.1538 hours
Scenario Description: FDOT 240 Hour - 240 hr - 100 yr

Scenarios considered: 4 to 4

Summary of Results *:: Scenario 4 :: FDOT 240 Hour - 240 hr - 100 yr*

	Time (hours)	Stage (ft datum)	Rate (ft^3/s)	Volume (ft^3)
Stage				
Minimum	0.000	98.00		
Maximum	184.154	106.93		
Inflow				
Rate - Maximum - Positive	183.994		1.7957	
Rate - Maximum - Negative	None		None	
Cumulative Volume - Maximum Positive	240.516			171973.1
Cumulative Volume - Maximum Negative	None			None
Cumulative Volume - End of Simulation	984.588			171973.1
Infiltration				
Rate - Maximum - Positive	33.281		0.7152	
Rate - Maximum - Negative	None		None	
Cumulative Volume - Maximum Positive	984.588			142407.7
Cumulative Volume - Maximum Negative	None			None
Cumulative Volume - End of Simulation	984.588			142407.7
Combined Discharge				
Rate - Maximum - Positive	184.154		0.5956	
Rate - Maximum - Negative	None		None	
Cumulative Volume - Maximum Positive	264.588			19962.0
Cumulative Volume - Maximum Negative	None			None
Cumulative Volume - End of Simulation	984.588			19962.0
Discharge Structure 1 - simple weir				
Rate - Maximum - Positive	184.154		0.5956	
Rate - Maximum - Negative	None		None	
Cumulative Volume - Maximum Positive	264.588			19962.0
Cumulative Volume - Maximum Negative	None			None
Cumulative Volume - End of Simulation	984.588			19962.0
Discharge Structure 2 - inactive				
Rate - Maximum - Positive	disabled		disabled	
Rate - Maximum - Negative	disabled		disabled	
Cumulative Volume - Maximum Positive	disabled			disabled
Cumulative Volume - Maximum Negative	disabled			disabled
Cumulative Volume - End of Simulation	disabled			disabled
Discharge Structure 3 - inactive				
Rate - Maximum - Positive	disabled		disabled	
Rate - Maximum - Negative	disabled		disabled	
Cumulative Volume - Maximum Positive	disabled			disabled
Cumulative Volume - Maximum Negative	disabled			disabled
Cumulative Volume - End of Simulation	disabled			disabled
Pollution Abatement:				
36 Hour Stage and Infiltration Volume	N.A.	N.A.		N.A.
72 Hour Stage and Infiltration Volume	N.A.	N.A.		N.A.

Attachment E

Soils Map

Hydrologic Soil Group—Alachua County, Florida

MAP LEGEND

Area of Interest (AOI)

Area of Interest (AOI)

Soils

Soil Rating Polygons

- A
- A/D
- B
- B/D
- C
- C/D
- D
- Not rated or not available

Soil Rating Lines

- A
- A/D
- B
- B/D
- C
- C/D
- D
- Not rated or not available

Soil Rating Points

- A
- A/D
- B
- B/D
- C
- C/D
- D
- Not rated or not available

Water Features

Streams and Canals

Transportation

- Rails
- Interstate Highways
- US Routes
- Major Roads
- Local Roads

Background

Aerial Photography

MAP INFORMATION

The soil surveys that comprise your AOI were mapped at 1:15,800.

Warning: Soil Map may not be valid at this scale.

Enlargement of maps beyond the scale of mapping can cause misunderstanding of the detail of mapping and accuracy of soil line placement. The maps do not show the small areas of contrasting soils that could have been shown at a more detailed scale.

Please rely on the bar scale on each map sheet for map measurements.

Source of Map: Natural Resources Conservation Service
Web Soil Survey URL: http://websoilsurvey.nrcs.usda.gov
Coordinate System: Web Mercator (EPSG:3857)

Maps from the Web Soil Survey are based on the Web Mercator projection, which preserves direction and shape but distorts distance and area. A projection that preserves area, such as the Albers equal-area conic projection, should be used if more accurate calculations of distance or area are required.

This product is generated from the USDA-NRCS certified data as of the version date(s) listed below.

Soil Survey Area: Alachua County, Florida
Survey Area Data: Version 16, Nov 19, 2015

Soil map units are labeled (as space allows) for map scales 1:50,000 or larger.

Date(s) aerial images were photographed: Dec 29, 2010—Jan 22, 2011

The orthophoto or other base map on which the soil lines were compiled and digitized probably differs from the background imagery displayed on these maps. As a result, some minor shifting of map unit boundaries may be evident.

Hydrologic Soil Group

Hydrologic Soil Group— Summary by Map Unit — Alachua County, Florida (FL001)				
Map unit symbol	**Map unit name**	**Rating**	**Acres in AOI**	**Percent of AOI**
73	Kendrick sand, 5 to 8 percent slopes	B	2.7	55.7%
76	Bivans sand, 5 to 8 percent slopes	C/D	2.2	44.3%
Totals for Area of Interest			**4.9**	**100.0%**

Description

Hydrologic soil groups are based on estimates of runoff potential. Soils are assigned to one of four groups according to the rate of water infiltration when the soils are not protected by vegetation, are thoroughly wet, and receive precipitation from long-duration storms.

The soils in the United States are assigned to four groups (A, B, C, and D) and three dual classes (A/D, B/D, and C/D). The groups are defined as follows:

Group A. Soils having a high infiltration rate (low runoff potential) when thoroughly wet. These consist mainly of deep, well drained to excessively drained sands or gravelly sands. These soils have a high rate of water transmission.

Group B. Soils having a moderate infiltration rate when thoroughly wet. These consist chiefly of moderately deep or deep, moderately well drained or well drained soils that have moderately fine texture to moderately coarse texture. These soils have a moderate rate of water transmission.

Group C. Soils having a slow infiltration rate when thoroughly wet. These consist chiefly of soils having a layer that impedes the downward movement of water or soils of moderately fine texture or fine texture. These soils have a slow rate of water transmission.

Group D. Soils having a very slow infiltration rate (high runoff potential) when thoroughly wet. These consist chiefly of clays that have a high shrink-swell potential, soils that have a high water table, soils that have a claypan or clay layer at or near the surface, and soils that are shallow over nearly impervious material. These soils have a very slow rate of water transmission.

If a soil is assigned to a dual hydrologic group (A/D, B/D, or C/D), the first letter is for drained areas and the second is for undrained areas. Only the soils that in their natural condition are in group D are assigned to dual classes.

Rating Options

Aggregation Method: Dominant Condition

Component Percent Cutoff: *None Specified*

Tie-break Rule: Higher

Attachment F

Pipe Sizing

PIPE SIZE CALCULATIONS

RUNOFFF COEFFICIENT

Holiday Inn Alachua

Drainage Area	Total Area S.F.	Total Area AC.	Impervious Area C = 0.95	Open Area C = 0.20	C
S1	7,907.19	0.18	5,139.67	2,767.52	0.69
S2	4,854.18	0.11	4,562.93	291.25	0.91
S3	4,446.45	0.10	4,446.45	0.00	0.95
S4	4,705.81	0.11	4,705.81	0.00	0.95
S5	6,420.23	0.15	5,874.51	545.72	0.89
S6	7,019.10	0.16	6,878.72	140.38	0.94
S7	16,833.43	0.39	13,466.74	3,366.69	0.80
S8	10,441.69	0.24	9,501.94	939.75	0.88
S9	6,056.40	0.14	5,602.17	454.23	0.89
S10	5,333.76	0.12	5,173.75	160.01	0.93
S11			Manhole		
STCO-1	0.00	0.00	0.00	0.00	0.00
STCO-2	7,059.32	0.16	7,059.32	0.00	0.95
STCO-3	3,575.03	0.08	3,575.03	0.00	0.95
STCO-4	0.00	0.00	0.00	0.00	0.00

Hydraflow Storm Sewers Extension for Autodesk® AutoCAD® Civil 3D® Plan

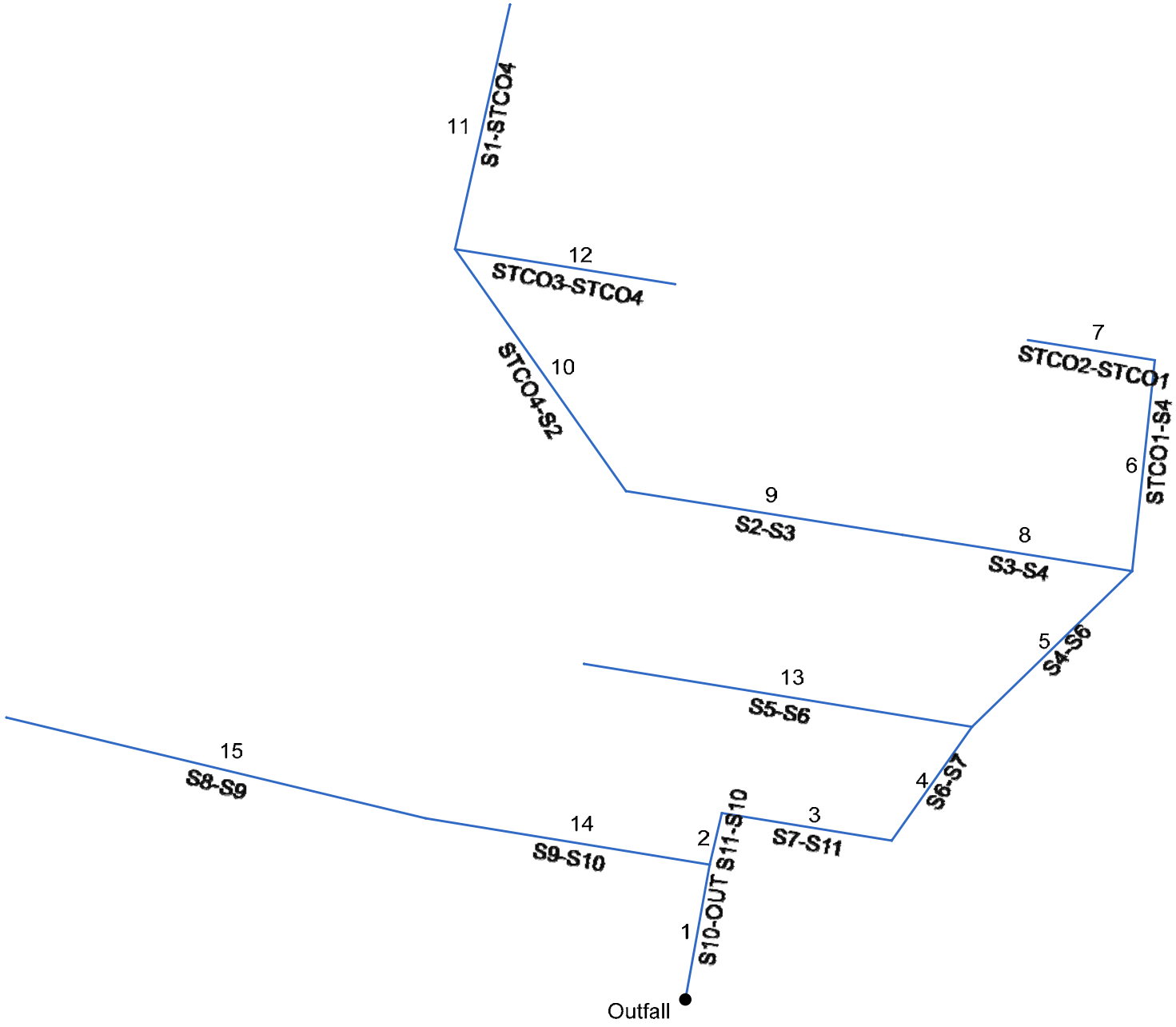

Project File: with model run.stm	Number of lines: 15	Date: 9/29/2016

Storm Sewers v10.30

Storm Sewer Summary Report

Line No.	Line ID	Flow rate (cfs)	Line Size (in)	Line shape	Line length (ft)	Invert EL Dn (ft)	Invert EL Up (ft)	Line Slope (%)	HGL Down (ft)	HGL Up (ft)	Minor loss (ft)	HGL Junct (ft)	Dns Line No.	Junction Type
1	S10-OUT	9.27	18	Cir	52.624	102.00	103.28	2.432	102.81	104.46	n/a	104.46	End	Grate
2	S11-S10	6.84	18	Cir	20.251	103.28	103.69	2.025	104.46	104.70	n/a	104.70 j	1	Manhole
3	S7-S11	6.88	18	Cir	54.057	103.69	104.77	1.998	104.70	105.78	n/a	105.78	2	Grate
4	S6-S7	5.19	15	Cir	50.565	104.77	106.29	3.006	105.78	107.21	n/a	107.21 j	3	Grate
5	S4-S6	3.67	15	Cir	78.178	106.29	109.81	4.503	107.21	110.58	n/a	110.58 j	4	Grate
6	STCO1-S4	0.94	6	Cir	81.756	111.41	117.99	8.048	111.67	118.46	n/a	118.46	5	None
7	STCO2-STCO1	0.94	6	Cir	40.308	118.35	119.68	3.300	118.71	120.15	0.38	120.15	6	None
8	S3-S4	2.27	15	Cir	73.004	109.81	111.82	2.753	110.58	112.42	n/a	112.42 j	5	Grate
9	S2-S3	1.78	15	Cir	87.931	111.82	114.24	2.752	112.42	114.77	n/a	114.77 j	8	Grate
10	STCO4-S2	1.21	8	Cir	107.561	114.24	116.82	2.399	114.77	117.34	n/a	117.61 j	9	None
11	S1-STCO4	0.77	8	Cir	96.000	116.82	118.28	1.521	117.34	118.69	n/a	118.69 j	10	Grate
12	STCO3-STCO4	0.47	6	Cir	70.007	116.82	119.41	3.700	117.61	119.76	n/a	119.76 j	10	None
13	S5-S6	0.83	15	Cir	123.486	106.29	109.38	2.502	107.21	109.74	n/a	109.74 j	4	Grate
14	S9-S10	1.94	18	Cir	90.386	103.28	104.86	1.748	104.46	105.38	n/a	105.38 j	1	Grate
15	S8-S9	1.31	15	Cir	136.532	104.86	107.59	2.000	105.38	108.04	n/a	108.04 j	14	Grate

Project File: with model run.stm | Number of lines: 15 | Run Date: 9/29/2016

NOTES: Return period = 3 Yrs. ; j - Line contains hyd. jump.

FL-DOT Report

Line No	To Line	Type of struc	n - Value	Len (ft)	Drainage Area C1 = 0.2 C2 = 0.5 C3 = 0.9 Increment (ac)	Sub-Total (ac)	Sum CA	Time of conc (min)	Time of Flow in sect (min)	Inten (I) (in/hr)	Total CA	Add Q Total Flow Q (cfs)	Inlet elev (ft)	Elev of HGL / Elev of Crown / Elev of Invert Up (ft)	Down (ft)	Fall (ft)	Rise / Span Size (in)	HGL / Pipe Slope (%)	ADD / Full Flow Vel (ft/s)	Cap (cfs)	Date: 9/29/2016 / Frequency: 3 yrs / Proj: with model run.stm Line description
1	End	Grate	0.013	52.624	0.00	0.00	0.00	13.82	0.16	5.47	1.70	0.00	112.81	104.46	102.81	1.65	18	3.13	7.89	9.27	S10-OUT
					0.00	0.00	0.00					9.27		104.78	103.50		18	2.43	9.27	16.38	
					0.00	0.00	0.00							103.28	102.00	1.28	Cir				
2	1	MH	0.013	20.251	0.00	0.00	0.00	13.73	0.09	5.48	1.25	0.00	112.41	104.70	104.46	0.25	18	1.21	5.00	6.84	S11-S10
					0.00	0.00	0.00					6.84		105.19	104.78		18	2.02	8.46	14.94	
					0.00	0.00	0.00							103.69	103.28	0.41	Cir				
3	2	Grate	0.013	54.057	0.00	0.00	0.00	13.51	0.23	5.52	1.25	0.00	110.53	105.78	104.70	1.08	18	2.00	5.42	6.88	S7-S11
					0.00	0.00	0.00					6.88		106.27	105.19		18	2.00	8.40	14.84	
					0.00	0.00	0.00							104.77	103.69	1.08	Cir				
4	3	Grate	0.013	50.565	0.00	0.00	0.00	13.31	0.19	5.55	0.94	0.00	114.90	107.21	105.78	1.43	15	2.82	5.11	5.19	S6-S7
					0.00	0.00	0.00					5.19		107.54	106.02		15	3.01	9.12	11.20	
					0.00	0.00	0.00							106.29	104.77	1.52	Cir				
5	4	Grate	0.013	78.178	0.00	0.00	0.00	12.89	0.42	5.62	0.65	0.00	117.94	110.58	107.21	3.37	15	4.31	4.19	3.67	S4-S6
					0.00	0.00	0.00					3.67		111.06	107.54		15	4.50	11.17	13.70	
					0.00	0.00	0.00							109.81	106.29	3.52	Cir				
6	5	None	0.012	81.756	0.00	0.00	0.00	10.14	0.29	6.17	0.15	0.00	121.96	118.46	111.67	6.78	6	8.30	6.94	0.94	STCO1-S4
					0.00	0.00	0.00					0.94		118.49	111.91		6	8.05	8.78	1.72	
					0.00	0.00	0.00							117.99	111.41	6.58	Cir				
7	6	None	0.012	40.308	0.00	0.00	0.00	10.00	0.14	6.20	0.15	0.00	123.10	120.15	118.71	1.44	6	3.57	5.63	0.94	STCO2-STCO1
					0.00	0.00	0.00					0.94		120.18	118.85		6	3.30	5.62	1.10	
					0.00	0.00	0.00							119.68	118.35	1.33	Cir				
8	5	Grate	0.013	73.004	0.00	0.00	0.00	12.24	0.64	5.74	0.40	0.00	119.99	112.42	110.58	1.84	15	2.52	3.37	2.27	S3-S4
					0.00	0.00	0.00					2.27		113.07	111.06		15	2.75	8.73	10.71	
					0.00	0.00	0.00							111.82	109.81	2.01	Cir				
9	8	Grate	0.013	87.931	0.00	0.00	0.00	11.24	1.00	5.94	0.30	0.00	119.16	114.77	112.42	2.35	15	2.67	3.33	1.78	S2-S3
					0.00	0.00	0.00					1.78		115.49	113.07		15	2.75	8.73	10.71	
					0.00	0.00	0.00							114.24	111.82	2.42	Cir				
10	9	None	0.012	107.561	0.00	0.00	0.00	10.72	0.51	6.04	0.20	0.00	123.07	117.34	114.77	2.57	8	2.39	4.10	1.21	STCO4-S2
					0.00	0.00	0.00					1.21		117.49	114.91		8	2.40	5.81	2.03	
					0.00	0.00	0.00							116.82	114.24	2.58	Cir				

NOTES: Intensity = 39.96 / (Inlet time + 7.70) ^ 0.65 (in/hr) ; Time of flow in section is based on full flow.

Project File: with model run.stm

FL-DOT Report

Line No	To Line	Type of struc	n - Value	Len (ft)	Drainage Area C1 = 0.2 C2 = 0.5 C3 = 0.9 Increment (ac)	Sub-Total (ac)	Sum CA	Time of conc (min)	Time of Flow in sect (min)	Inten (I) (in/hr)	Total CA	Add Q Total Flow Q (cfs)	Inlet elev (ft)	Elev of HGL / Elev of Crown / Elev of Invert Up (ft)	Down (ft)	Fall (ft)	Rise / Span Size (in)	HGL / Pipe Slope (%)	ADD / Full Flow Vel (ft/s)	Cap (cfs)	Date: 9/29/2016 / Frequency: 3 yrs / Proj: with model run.stm Line description
11	10	Grate	0.012	96.000	0.00	0.00	0.00	10.00	0.72	6.20	0.12	0.00	122.95	118.69	117.34	1.35	8	1.41	3.01	0.77	S1-STCO4
					0.00	0.00	0.00					0.77		118.95	117.49		8	1.52	4.62	1.61	
					0.00	0.00	0.00							118.28	116.82	1.46	Cir				
12	10	None	0.012	70.007	0.00	0.00	0.00	10.00	0.49	6.20	0.08	0.00	119.95	119.76	117.61	2.15	6	3.08	2.81	0.47	STCO3-STCO4
					0.00	0.00	0.00					0.47		119.91	117.32		6	3.70	5.95	1.17	
					0.00	0.00	0.00							119.41	116.82	2.59	Cir				
13	4	Grate	0.013	123.486	0.00	0.00	0.00	10.00	3.05	6.20	0.13	0.00	115.90	109.74	107.21	2.52	15	2.04	1.86	0.83	S5-S6
					0.00	0.00	0.00					0.83		110.63	107.54		15	2.50	8.32	10.21	
					0.00	0.00	0.00							109.38	106.29	3.09	Cir				
14	1	Grate	0.013	90.386	0.00	0.00	0.00	12.13	1.31	5.76	0.34	0.00	112.48	105.38	104.46	0.93	18	1.03	2.41	1.94	S9-S10
					0.00	0.00	0.00					1.94		106.36	104.78		18	1.75	7.86	13.88	
					0.00	0.00	0.00							104.86	103.28	1.58	Cir				
15	14	Grate	0.013	136.532	0.00	0.00	0.00	10.00	2.13	6.20	0.21	0.00	111.84	108.04	105.38	2.66	15	1.95	2.98	1.31	S8-S9
					0.00	0.00	0.00					1.31		108.84	106.11		15	2.00	7.44	9.13	
					0.00	0.00	0.00							107.59	104.86	2.73	Cir				

NOTES: Intensity = 39.96 / (Inlet time + 7.70) ^ 0.65 (in/hr) ; Time of flow in section is based on full flow.

Project File: with model run.stm

HOLIDAY INN ALACHUA

CITY OF ALACHUA, FLORIDA

DEVELOPMENT INFORMATION

1.	NAME OF PROJECT:	HOLIDAY INN ALACHUA
2.	PROJECT DEVELOPER:	MPH HOTELS 100 2ND AVENUE SOUTH, SUITE 1103–5 ST. PETERSBURG, FL 33701 (727) 914–8885 RANDY GIBBSON
3.	LAND OWNER:	HIPP INVESTMENTS LLC 14610 NW 129TH TERRACE ALACHUA, FL 32615
4.	PROJECT DESCRIPTION:	CONSTRUCTION OF A HOTEL WITH ASSOCIATED PARKING, UTILITIES AND STORMWATER FACILITIES. ACCOMMODATIONS INCLUDE: – 92 GUESTROOMS (35,477 S.F.) – 24 SEAT MEETING ROOM (720 S.F.) – FITNESS CENTER (665 S.F.) – LOBBY (3,030 S.F.)
5.	PROJECT ADDRESS:	16139 N.W. US HIGHWAY 441
6.	TAX PARCEL NUMBER:	A PORTION OF 03053–001–001
7.	SECTION/TOWNSHIP/RANGE:	SECTION 09, TOWNSHIP 08 SOUTH, RANGE 18 EAST
8.	ZONING:	COMMERCIAL INTENSIVE
9.	FUTURE LAND DESIGNATION:	COMMERCIAL
10.	UTILITY SERVICE PROVIDERS:	WATER/WASTE WATER: CITY OF ALACHUA PUBLIC SERVICES ELECTRIC: CITY OF ALACHUA PUBLIC SERVICES GAS: GAINESVILLE REGIONAL UTILITIES (CITY OF ALACHUA) CABLE: COX COMMUNICATION TELEPHONE: WINDSTREAM

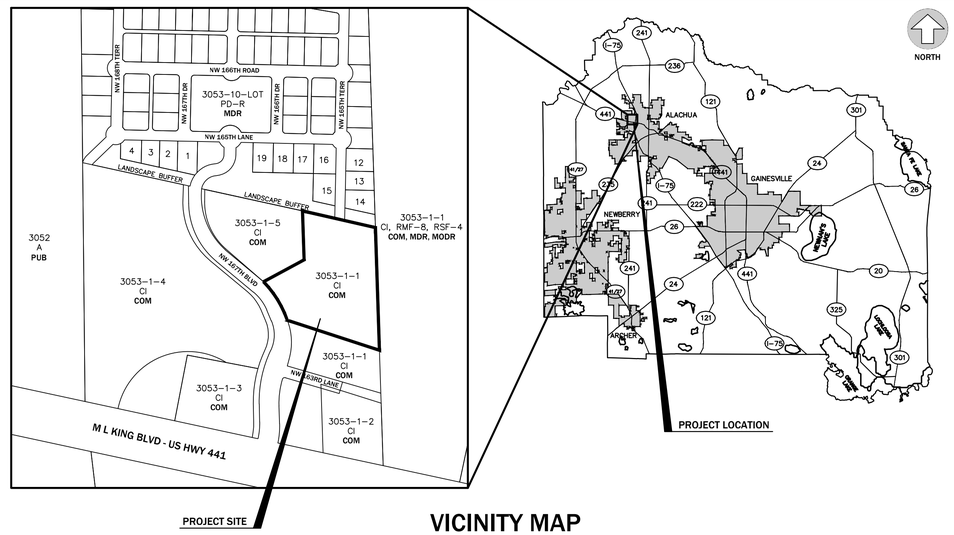

VICINITY MAP

ALACHUA COUNTY, FLORIDA

NOT TO SCALE

LEGEND

ZONING:

A – AGRICULTURE
CI – COMMERCIAL INTENSIVE
PD–R – PLANNED DEVELOPMENT
RSF–4 – RESIDENTIAL SINGLE FAMILY
RMF–8 – RESIDENTIAL MULTI–FAMILY

FUTURE LAND USE:

COM – COMMERCIAL
MDR – MEDIUM DENSITY RESIDENTIAL
MODR – MODERATE DENSITY RESIDENTIAL
PUB – PUBLIC

LEGAL DESCRIPTION

A PORTION OF 03053–001–001:

A PORTION OF FRACTIONAL SECTION 9, TOWNSHIP 8 SOUTH, RANGE 18 EAST, ALACHUA COUNTY, FLORIDA; BEING MORE PARTICULARLY DESCRIBED AS FOLLOWS:

COMMENCE AT THE NORTHWEST CORNER OF FRACTIONAL SECTION 9, TOWNSHIP 8 SOUTH, RANGE 18 EAST, ALACHUA COUNTY, FLORIDA AND RUN THENCE SOUTH 01°49'00" EAST, ALONG THE WEST BOUNDARY OF SAID SECTION, 1576.08 FEET; THENCE NORTH 88°33'13" EAST, 1300.20 FEET TO THE NORTHWEST CORNER OF THAT CERTAIN TRACT OF LAND AS DESCRIBED IN OFFICIAL RECORDS BOOK 503, PAGE 107 OF THE PUBLIC RECORDS OF ALACHUA COUNTY, FLORIDA; THENCE SOUTH 01°49'00" EAST, ALONG THE WEST LINE OF SAID CERTAIN TRACT OF LAND, 1347.88 FEET TO A 4" X 4" CONCRETE MONUMENT (STAMPED "LB 5091 BARRINEAU") AS DEPICTED ON 'HERITAGE OAKS PHASE I', A SUBDIVISION AS PER PLAT THEREOF, RECORDED IN PLAT BOOK 24, PAGE 79 OF SAID PUBLIC RECORDS; THENCE SOUTH 78°52'28" EAST, ALONG THE SOUTH BOUNDARY OF SAID HERITAGE OAKS PHASE I, A DISTANCE OF 933.22 FEET TO THE POINT OF BEGINNING; THENCE CONTINUE SOUTH 78°52'28" EAST, ALONG SAID SOUTH BOUNDARY, 324.76 FEET TO THE SOUTHEAST CORNER OF SAID HERITAGE OAKS PHASE I AND TO A POINT ON THE EAST LINE OF THAT CERTAIN TRACT OF LAND AS DESCRIBED IN OFFICIAL RECORDS BOOK 27, PAGE 296 OF SAID PUBLIC RECORDS; THENCE SOUTH 03°06'22" EAST, ALONG SAID EAST LINE, 514.31 FEET; THENCE NORTH 73°46'22" WEST, 416.85 FEET TO A POINT ON THE EAST LINE OF AN INGRESS AND EGRESS, ROAD IMPROVEMENTS, AND PUBLIC UTILITIES EASEMENT AGREEMENT RECORDED IN OFFICIAL RECORDS BOOK 4400, PAGE 2104 OF SAID PUBLIC RECORDS, SAID POINT LYING ON THE ARC OF A CURVE, CONCAVE SOUTHWESTERLY, HAVING A RADIUS OF 301.00 FEET; THENCE NORTHWESTERLY, ALONG THE EAST LINE OF SAID INGRESS AND EGRESS, ROAD IMPROVEMENTS AND PUBLIC UTILITIES EASEMENT AGREEMENT, THROUGH THE FOLLOWING THREE (3) COURSES: (1) RUN THENCE NORTHWESTERLY ALONG THE ARC OF SAID CURVE THROUGH A CENTRAL ANGLE OF 19°31'14", AN ARC DISTANCE OF 102.55 FEET TO THE END OF SAID CURVE, SAID ARC BEING SUBTENDED BY A CHORD HAVING A BEARING AND DISTANCE OF NORTH 27°02'33" WEST, 102.06 FEET, (2) NORTH 36°48'10" WEST, 46.40 FEET TO THE BEGINNING OF A CURVE, CONCAVE SOUTHWESTERLY, HAVING A RADIUS OF 201.00 FEET, (3) THENCE NORTHWESTERLY, ALONG THE ARC OF SAID CURVE, THROUGH A CENTRAL ANGLE OF 12°08'02", AN ARC DISTANCE OF 42.57 FEET, SAID ARC BEING SUBTENDED BY A CHORD HAVING A BEARING AND DISTANCE OF NORTH 42°52'11" WEST, 42.49 FEET; THENCE NORTH 60°21'17" EAST, 193.23 FEET; THENCE NORTH 03°06'22" WEST, 205.27 FEET TO THE POINT OF BEGINNING.

TOGETHER WITH RIGHTS OF INGRESS AND EGRESS OVER AND ACROSS THE RIGHT–OF–WAY DESCRIBED IN THE AMENDMENT TO INGRESS–EGRESS ROAD IMPROVEMENTS RECORDED IN O.R. BOOK 4400, PAGE 2104, PUBLIC RECORDS OF ALACHUA COUNTY, FLORIDA.

PARKING CALCULATIONS

DESCRIPTION	CRITERIA	REQUIRED	PROVIDED
VEHICULAR PARKING	1 PER SLEEPING ROOM 2 FOR OWNER/MANAGER	92 ROOMS X 1 SPACE/ROOM + 2 SPACES = 94	100 SPACES INCLUDING 5 HANDICAP SPACES
BICYCLE PARKING	1 PER 10 REQUIRED VEHICLE SPACES	94 VEHICLE SPACES X 10% = 9.4 SPACES	10 SPACES 5 U–RACK
HANDICAP PARKING	ADA REQUIREMENTS	BETWEEN 76–100 SPACES = 4 H.C. SPACES	5 H.C. SPACES

TRIP GENERATION

PER I.T.E. MANUAL, 9TH EDITION
LAND USE: (310 - HOTEL)
PROPOSED = 92 ROOMS

1. AVERAGE DAILY TRIPS: 8.17 TRIPS / ROOMS x 92 = 752 TRIPS
   50% ENTERING, 50% EXITING
2. A.M. PEAK: 0.53 TRIPS / ROOM x 92 = 48 TRIPS
   54% ENTERING, 46% EXITING
3. P.M. PEAK: 0.60 TRIPS / ROOMS x 92 = 56 TRIPS
   58% ENTERING, 42% EXITING

IMPERVIOUS AREA CALCULATIONS

#	DESCRIPTION	SQUARE FOOTAGE	ACREAGE	PERCENTAGE
1.	TOTAL SITE AREA:	185,177 S.F.	4.25 Ac.	100%
2.	PROPOSED BUILDING COVERAGE:	13,600 S.F.	0.31 Ac.	7.3%
3.	PAVEMENT AND SIDEWALK AREA:	60,159 S.F.	1.38 Ac.	32.5%
4.	TOTAL IMPERVIOUS AREA:	73,759 S.F.	1.69 Ac.	39.8%
5.	OPEN AREA:	115,741 S.F.	2.65 Ac.	62.4%
6.	FLOOR TO AREA RATIO:	53,792 BUILDING SF : 185,1777 SITE SF = 0.29		

DRAWING INDEX

Sheet Number	Sheet Title
C0.00	COVER SHEET
C0.10	LEGEND, SYMBOLS AND NOTES
C0.20	DEVELOPMENT PLAN
C0.30	DEMOLITION PLAN
C1.00	DIMENSION PLAN
C2.00	PAVING, GRADING AND DRAINAGE PLAN
C2.10	PAVING, GRADING AND DRAINAGE DETAILS AND NOTES
C2.20	BASIN DETAILS
C3.00	STORMWATER POLLUTION PREVENTION PLAN
C3.10	EROSION AND SEDIMENTATION CONTROL PLAN
C3.20	EROSION DETAILS AND NOTES
C4.00	UTILITY PLAN
C4.10	UTILITY DETAILS AND NOTES
V–001	BOUNDARY AND TOPOGRAPHIC SURVEY
E–1	PHOTOMETRIC PLAN (BY OTHERS)
L1–L4	LANDSCAPE PLAN (BY OTHERS)
A	ARCHITECTURAL PLAN (BY OTHERS)

No.	Date	Comment

NORTH

SCALE:
AS SHOWN

eda years
engineers • surveyors • planners
EB 2389
2404 N.W. 43rd ST. GAINESVILLE, FLORIDA 32606-6402
TEL: (352)373-3541 FAX: (352)373-7249
www.eda.fl.com mail@eda.fl.com

Project: HOLIDAY INN ALACHUA
CITY OF ALACHUA, FLORIDA

Sheet title: COVER SHEET

Project phase: CITY OF ALACHUA RESUBMITTAL

Designed: SERGIO J. MARTINEZ Checked: TAR

Project No. 16-243 Date: 12/19/2016

Professional Engineer of Record:
STATE OF FLORIDA
PROFESSIONAL ENGINEER
Sergio J. Martinez
Engineer Certificate No. 67311

Sheet No.:

C0.00

EXISTING SYMBOLS & ABBREVIATIONS

C/L	=	CENTERLINE
cmp	=	CORRUGATED METAL PIPE
CONC	=	CONCRETE
COR	=	CORNER
D	=	DELTA (CENTRAL) ANGLE
R	=	RADIUS
A	=	ARC
T	=	TANGENT
CB	=	CHORD BEARING
CD	=	CHORD DISTANCE
dip	=	DUCTILE IRON PIPE
ELEV	=	ELEVATION
ecmp	=	ELLIPTICAL CORRUGATED METAL PIPE
ercp	=	ELLIPTICAL REINFORCED CONCRETE PIPE
ID.	=	IDENTIFICATION
inv	=	INVERT
F.D.O.T.	=	FLORIDA DEPARTMENT OF TRANSPORTATION
F.F.	=	FINISHED FLOOR
M.E.S.	=	MITERED END SECTION
No.	=	NUMBER
O.R.	=	OFFICIAL RECORDS BOOK
PGS.	=	PAGES
PVC	=	POLY-VINYL CHLORIDE
RCP	=	REINFORCED CONCRETE PIPE
R/W	=	RIGHT OF WAY
SEC 28-9-19	=	SECTION 28, TOWNSHIP 9 SOUTH, RANGE 19 EAST
TRAN	=	ELECTRICAL TRANSFORMER PAD
TW	=	TOP OF WALL
w/	=	WITH
ANCH ⟵	=	GUY ANCHOR
○ BO	=	WATER BLOW OFF
○ CO	=	SANITARY CLEAN-OUT
■	=	FOUND CONCRETE MONUMENT (size, ID)
●	=	FOUND DRILL HOLE
⬢	=	FOUND IRON PIPE (size, ID)
⊕	=	FOUND NAIL & DISK (ID)
●	=	FOUND REBAR & CAP (size, ID)
▲	=	FOUND SPIKE
⊞ GM	=	GAS METER
⋈ GV	=	GAS VALVE
○ GP	=	GUY POLE
(HH)	=	ELECTRICAL HANDHOLE
FH	=	FIRE HYDRANT
⋈ IRRIG VLV	=	IRRIGATION VALVE
LT PL	=	LIGHT POLE
◊ MBOX	=	MAIL BOX
◯	=	MANHOLE
○ PP	=	POWER POLE
○	=	SET 5/8" REBAR & CAP (LB 2389)
□	=	SET CONCRETE MONUMENT (PRM LB 2389)
⊙	=	SET NAIL & DISC (PRM LB 2389)
△	=	SET SPIKE
	=	SHRUB
	=	SIGN
[T] TELBX	=	TELEPHONE RISER
[T] TVBOX	=	CABLE TELEVISION RISER
⊞ WM	=	WATER METER
⋈ WV	=	WATER VALVE
80	=	ELEVATION CONTOUR LINE
—X—X—	=	FENCE LINE
—OHGW—	=	OVERHEAD GUY WIRE
—OHPL—	=	OVERHEAD POWER LINE
—OHTL—	=	OVERHEAD TELEPHONE LINE
—OHTV—	=	OVERHEAD TELEVISION LINE
—SS—	=	SANITARY SEWER LINE
—UGE—	=	UNDERGROUND ELECTRIC LINE
—GAS—	=	UNDERGROUND GAS LINE
—UGT—	=	UNDERGROUND TELEPHONE LINE
—UGTV—	=	UNDERGROUND CABLE TELEVISION LINE
—WL—	=	UNDERGROUND WATER LINE
88.95 ×	=	SPOT ELEVATION

TREE LEGEND

THE ONLY TREES LOCATED FOR THIS SURVEY WERE HARDWOODS 8" AND GREATER AND PINES 12" AND GREATER (DIAMETER MEASURED AT BREAST HEIGHT)

LOCATION / SPECIES / DIAMETER AT BREAST HEIGHT IN INCHES

			SIZE/COMMON NAME
•	ba10.	=	10" BAY
•	cb11.	=	11" CHINABERRY
•	ce11.	=	11" CEDAR
•	ch12.	=	12" CHERRY
•	cht10.	=	10" CHINESE TALLOW
•	hi11.	=	11" HICKORY
•	lao12.	=	12" LAUREL OAK
•	lo15.	=	15" LIVE OAK
•	mb12.	=	12" MULBERRY
•	mg18.	=	18" MAGNOLIA
•	pa18.	=	18" PALM
•	pi14.	=	14" PINE
•	po9.	=	9" POST OAK
•	sb11.	=	11" SUGARBERRY
•	sg17.	=	17" SWEETGUM
•	tko11.	=	11" TURKEY OAK
•	tree18.	=	18" UNIDENTIFIED TREE
•	wo14.	=	14" WATER OAK

LEGEND

—○—○—○—	TREE BARRICADE
—//—//—	SILT FENCE
(TBR)	EXISTING FEATURES TO BE REMOVED (TBR)
▨	LIMITS OF EXISTING ASPHALT PAVEMENT, CONCRETE AND/OR BUILDING TO BE REMOVED
▒	LIMITS OF ASPHALT PAVEMENT
░	LIMITS OF CONCRETE PAVEMENT AND SIDEWALKS
▦	PEDESTRIAN WALKWAY (SEE SHEET C2.10 FOR DETAILS, MATERIAL AND INSTALLATION)
• pi20	EXISTING TREE TO REMAIN
× pi20	EXISTING TREE TO BE REMOVED
×180.00	EXISTING SPOT ELEVATION
180.00	PROPOSED SPOT ELEVATION
—183.25—	PROPOSED CONTOUR ELEVATION
—183—	EXISTING CONTOUR ELEVATION

PROPOSED UTILITY SYMBOLS

—WM—	WATER MAIN, PROPOSED
—WM—	WATER MAIN, EXISTING
—WW—	WASTEWATER GRAVITY MAIN, PROPOSED
	PLUG END AND CAP
	BLOW-OFF ASSEMBLY
	GATE VALVE & BOX
	BUTTERFLY VALVE
	PLUG VALVE
	SWING CHECK VALVE
	BACK FLOW PREVENTER
RP	REDUCED PRESSURE ZONE BFP
DC	DOUBLE CHECK BFP
	DUAL CHECK VALVE
ARV	AIR RELEASE VALVE
	REDUCER FITTING
(R)	PRESSURE REGULATOR
	POST INDICATOR VALVE
	CLEAN OUT OR ROOF DRAIN LATERAL
	FITTING W/ THRUST BLOCK
	FIRE HYDRANT W/ THRUST BLOCK
	FIRE HYDRANT ASSEMBLY
■	POTABLE WATER METER
	SINGLE SERVICE WATER METER
	DUAL SERVICE WATER METER
	GANG WATER METER ASSEMBLY
TX	ELECTRIC TRANSFORMER
◆	RECLAIMED WATER METER ASSEMBLY
—RCW—	RECLAIMED WATER MAIN, PROPOSED
—RCW—	PLUG END AND CAP
—RCW—	BLOW-OFF ASSEMBLY
RCW	GATE VALVE & BOX
RCW	REDUCER FITTING
—FM—	WASTEWATER (PRESSURE) MAIN, PROPOSED
—SS—	SANITARY SEWER MAIN, PROPOSED
—SS—	SANITARY SEWER MAIN, EXISTING
● SS	SANITARY SEWER MANHOLE, PROPOSED
○ SS	SANITARY SEWER MANHOLE, EXISTING
	SANITARY SEWER PLUG
	PLUG VALVE
	SEWER LATERAL, SINGLE SERVICE
	GATE VALVE
	CHECK VALVE
A. R.	AIR RELEASE VALVE

GENERAL NOTES

1. LOCATIONS, ELEVATIONS, AND DIMENSIONS OF EXISTING UTILITIES, STRUCTURES AND OTHER FEATURES ARE SHOWN ACCORDING TO THE BEST INFORMATION AVAILABLE AT THE TIME OF PREPARATION OF THESE PLANS. THE CONTRACTOR SHALL VERIFY THE LOCATIONS, ELEVATIONS, AND DIMENSIONS OF ALL EXISTING UTILITIES, STRUCTURES AND OTHER FEATURES, AFFECTING THIS WORK, PRIOR TO CONSTRUCTION.
2. PRIOR TO THE INITIATION OF SITE CONSTRUCTION, THE CONTRACTOR SHALL VERIFY ANY EXISTING UTILITIES INCLUDING GAS, WATER, ELECTRIC, CABLE TV, COMMUNICATIONS, SANITARY SEWERS AND STORM DRAINAGE SYSTEMS, ON AND/OR ADJACENT TO THE SITE. REMOVE OR CAP AS NECESSARY. CONTACT ENGINEER OF RECORD IMMEDIATELY WITH ANY DISCREPANCIES.
3. THE CONTRACTOR IS RESPONSIBLE FOR REPAIRING ANY DAMAGE TO EXISTING FACILITIES, ABOVE OR BELOW GROUND, THAT MAY OCCUR AS A RESULT OF THE WORK PERFORMED, BY THE CONTRACTOR OR SUB-CONTRACTORS, AS CALLED FOR IN THESE CONTRACT DOCUMENTS.
4. CONTRACTOR TO COORDINATE WITH UTILITY COMPANIES FOR THE RELOCATION OF EXISTING UTILITIES. UTILITIES NEEDING TO BE REMOVED OR RELOCATED SHALL BE COORDINATED WITH THE AFFECTED UTILITY COMPANY. ADEQUATE TIME SHALL BE PROVIDED FOR RELOCATION, AND CLOSE COORDINATION WITH THE UTILITY COMPANY IS NECESSARY TO PROVIDE A SMOOTH TRANSITION IN UTILITY SERVICE. THE CONTRACTOR SHALL COORDINATE WITH THE UTILITY COMPANY CONCERNING PORTIONS OF THE WORK WHICH MAY BE PERFORMED BY THE UTILITY COMPANY'S FORCES AND ANY FEES WHICH ARE TO BE PAID TO THE UTILITY COMPANY FOR THEIR SERVICES. THE CONTRACTOR IS RESPONSIBLE FOR PAYING ALL FEES AND CHARGES.
5. IT IS THE CONTRACTOR'S RESPONSIBILITY TO BECOME FAMILIAR WITH THE PERMIT AND INSPECTION REQUIREMENTS SPECIFIED BY THE VARIOUS GOVERNMENTAL AGENCIES AND THE ENGINEER. THE CONTRACTOR SHALL OBTAIN ALL NECESSARY PERMITS PRIOR TO CONSTRUCTION, AND SCHEDULE INSPECTIONS ACCORDING TO AGENCY INSTRUCTION/REQUIREMENTS.
6. THE CONTRACTOR SHALL SUBMIT SHOP DRAWINGS, ON ALL PRECAST AND MANUFACTURED ITEMS, TO THE OWNER'S ENGINEER FOR REVIEW. FAILURE TO OBTAIN APPROVAL BEFORE INSTALLATION MAY RESULT IN REMOVAL AND REPLACEMENT AT THE CONTRACTOR'S EXPENSE.
7. SAFETY:
    A. DURING THE CONSTRUCTION AND/OR MAINTENANCE OF THIS PROJECT, ALL SAFETY REGULATIONS ARE TO BE ENFORCED. THE CONTRACTOR OR HIS REPRESENTATIVE SHALL BE RESPONSIBLE FOR THE CONTROL AND SAFETY OF THE TRAVELING PUBLIC AND THE SAFETY OF HIS/HER PERSONNEL.
    B. LABOR SAFETY REGULATIONS SHALL CONFORM TO THE PROVISIONS SET FORTH BY OSHA.
    C. THE MINIMUM STANDARDS AS SET FORTH IN THE CURRENT EDITION OF "THE STATE OF FLORIDA, MANUAL ON TRAFFIC CONTROL AND SAFE PRACTICES FOR STREET AND HIGHWAY CONSTRUCTION, MAINTENANCE AND UTILITY OPERATIONS" SHALL BE FOLLOWED IN THE DESIGN, APPLICATION, INSTALLATION, MAINTENANCE AND REMOVAL OF ALL TRAFFIC CONTROL DEVICES, WARNING DEVICES AND BARRIERS NECESSARY TO PROTECT THE PUBLIC AND CONSTRUCTION PERSONNEL FROM HAZARDS WITHIN THE PROJECT LIMITS.
    D. ALL TRAFFIC CONTROL MARKINGS AND DEVICES SHALL CONFORM TO THE PROVISIONS SET FORTH IN THE MANUAL ON UNIFORM TRAFFIC CONTROL DEVICES PREPARED BY THE U.S. DEPARTMENT OF TRANSPORTATION FEDERAL HIGHWAY ADMINISTRATION.
    E. ALL SUBSURFACE CONSTRUCTION SHALL COMPLY WITH THE "TRENCH SAFETY ACT". THE CONTRACTOR SHALL INSURE THAT THE METHOD OF TRENCH PROTECTION AND CONSTRUCTION IS IN COMPLIANCE WITH THE OCCUPATIONAL SAFETY AND HEALTH ADMINISTRATION (OSHA) REGULATIONS.
    F. IT SHALL BE THE SOLE RESPONSIBILITY OF THE CONTRACTOR TO COMPLY AND ENFORCE ALL APPLICABLE SAFETY REGULATIONS. THE ABOVE INFORMATION HAS BEEN PROVIDED FOR THE CONTRACTOR'S INFORMATION ONLY AND DOES NOT IMPLY THAT THE OWNER OR ENGINEER WILL INSPECT AND/OR ENFORCE SAFETY REGULATIONS.
8. ALL UNDERGROUND UTILITIES MUST BE IN-PLACE, TESTED AND INSPECTED PRIOR TO BASE AND SURFACE CONSTRUCTION.
9. CONTRACTOR IS REQUIRED TO SECURE A FLORIDA DEPARTMENT OF ENVIRONMENTAL PROTECTION (FDEP) "NATIONAL POLLUTANT DISCHARGE ELIMINATION SYSTEM" (NPDES) PERMIT BEFORE BEGINNING CONSTRUCTION.
10. A COMPLETE SET OF PERMITTED DRAWINGS AND SPECIFICATIONS MUST BE MAINTAINED ON SITE AT ALL TIMES THAT THE CONTRACTOR IS PERFORMING WORK. THESE DRAWINGS SHALL BE MADE AVAILABLE UPON REQUEST.
11. ALL EROSION AND SEDIMENT CONTROL DEVICES SHALL BE CONSTRUCTED SIMULTANEOUSLY WITH THE DISTURBANCE OF THE LAND AND SHALL REMAIN FUNCTIONAL UNTIL THE CONTRIBUTING DISTURBED AREAS ARE STABILIZED. SILT BARRIERS WILL BE INSTALLED AS NECESSARY TO PREVENT EXCESSIVE SEDIMENTATION OF DOWNSTREAM AREAS.
12. CONTRACTOR SHALL PROVIDE CITY AS-BUILT PLANS (IF REQUIRED BY THE CITY AND/OR ANY OTHER AGENCY), SIGNED AND SEALED BY A FLORIDA REGISTERED ENGINEER OR SURVEYOR AND A CERTIFIED PAPER COPY WITH ELECTRONIC COPY IN AUTOCAD FORMAT PRIOR TO FINAL ACCEPTANCE.
13. THE CONTRACTOR SHALL CONSTRUCT GRAVITY SEWER LATERALS, MANHOLES GRAVITY SEWER LINES AND DOMESTIC WATER AND FIRE PROTECTION SYSTEM AS SHOWN ON THESE PLANS. THE CONTRACTOR SHALL FURNISH ALL NECESSARY MATERIALS, EQUIPMENT, MACHINERY, TOOLS, MEANS OF TRANSPORTATION AND LABOR NECESSARY TO COMPLETE THE WORK IN FULL AND COMPLETE ACCORDANCE WITH THE SHOWN, DESCRIBED AND REASONABLY INTENDED REQUIREMENTS OF THE CONTRACT DOCUMENTS AND JURISDICTIONAL AGENCY REQUIREMENTS. IN THE EVENT THAT THE CONTRACT DOCUMENTS AND THE JURISDICTIONAL AGENCY REQUIREMENTS ARE NOT IN AGREEMENT, THE MOST STRINGENT SHALL GOVERN.

DEMOLITION NOTES

1. ALL MATERIAL REMOVED FROM THIS SITE BY THE CONTRACTOR SHALL BE DISPOSED OF BY THE CONTRACTOR IN A LEGAL MANNER.
2. REFER TO THE TOPOGRAPHIC SURVEY FOR ADDITIONAL DETAILS OF EXISTING STRUCTURES, ETC., LOCATED WITHIN THE PROJECT SITE. UNLESS OTHERWISE NOTED, ALL EXISTING BUILDINGS, STRUCTURES, SLABS, CONCRETE, ASPHALT, DEBRIS PILES, SIGNS, AND ALL APPURTENANCES ARE TO BE REMOVED FROM THE SITE BY THE CONTRACTOR AND PROPERLY DISPOSED OF IN A LEGAL MANNER AS PART OF THIS CONTRACT. SOME ITEMS TO BE REMOVED MAY NOT BE DEPICTED ON THE TOPOGRAPHIC SURVEY. IT IS THE CONTRACTOR'S RESPONSIBILITY TO VISIT THE SITE AND DETERMINE THE FULL EXTENT OF ITEMS TO BE REMOVED. IF ANY ITEMS ARE IN QUESTION, THE CONTRACTOR SHALL CONTACT THE OWNER PRIOR TO REMOVAL OF SAID ITEMS.
3. THE CONTRACTOR SHALL REFER TO THE DEMOLITION PLAN FOR DEMOLITION / PRESERVATION OF EXISTING TREES. ALL TREES NOT SPECIFICALLY SHOWN TO BE PRESERVED OR RELOCATED SHALL BE REMOVED AS A PART OF THIS CONTRACT. TREE PROTECTION FENCING SHALL BE INSTALLED PRIOR TO ANY DEMOLITION.
4. CONTRACTOR SHALL SUBMIT DEMOLITION SCHEDULE TO OWNER PRIOR TO PROCEEDING WITH DEMOLITION ACTIVITIES.
5. CONDUCT SITE DEMOLITION OPERATIONS TO ENSURE MINIMUM INTERFERENCE WITH ROADS, STREETS, WALKS, AND OTHER ADJACENT OCCUPIED OR USED FACILITIES. DO NOT CLOSE OR OBSTRUCT STREETS, WALKS, OR OTHER OCCUPIED OR USED FACILITIES WITHOUT PERMISSION FROM AUTHORITIES HAVING JURISDICTION. CLOSURE OF THESE FACILITIES MAY REQUIRE A MAINTENANCE OF TRAFFIC PLAN PREPARED BY A REGISTERED PROFESSIONAL AT THE CONTRACTORS EXPENSE.
6. PROVIDE PROTECTION AS NECESSARY TO PREVENT DAMAGE TO EXISTING IMPROVEMENTS SHOWN IN THE PLANS TO REMAIN.
7. LOCATE EXISTING ABOVE GROUND AND UNDERGROUND UTILITIES IN AREAS OF WORK. IF UTILITIES ARE TO REMAIN IN PLACE, PROVIDE ADEQUATE MEANS OF SUPPORT AND PROTECTION DURING DEMOLITION AND CONSTRUCTION OPERATIONS.
8. CONTRACTOR SHALL COORDINATE WITH APPLICABLE UTILITY COMPANIES FOR THE TERMINATION, CAPPING-OFF AND REMOVAL OF ALL EXISTING UNDERGROUND AND ABOVE GROUND UTILITY SERVICES UNLESS DIRECTED TO OTHERWISE.

CONSTRUCTION NOTES

1. SIGNS AND BARRICADES SHALL BE IN ACCORDANCE WITH THE U.S. DEPARTMENT OF TRANSPORTATION'S "MANUAL OF UNIFORM TRAFFIC CONTROL DEVICES", AND THE FLORIDA DEPARTMENT OF TRANSPORTATION'S "ROADWAY AND TRAFFIC DESIGN STANDARDS" INDEXES 600 THROUGH 685 (LATEST EDITIONS).
2. SAFE PEDESTRIAN TRAFFIC IS TO BE MAINTAINED AT ALL TIMES.
3. ANY SIDEWALK WHICH BECOMES UNDERMINED MUST BE REMOVED AND REPLACED. SIDEWALKS ARE TO BE RECONSTRUCTED WITHIN THREE (3) DAYS AFTER REMOVAL. WHEN EXISTING SIDEWALK IS REMOVED, IT IS TO BE REMOVED TO THE NEAREST JOINT.
4. DISTURBED AREA WITHIN THE R-O-W WILL BE COMPACTED TO 98% OF MAXIMUM DENSITY AND SODDED.
5. STOCKPILING OF MATERIAL IS NOT ALLOWED ON ROADWAYS OR SIDEWALKS. ALL DIRT AND DEBRIS WILL BE REMOVED FROM JOB SITE DAILY. ROADS AND SIDEWALKS ARE TO BE SWEPT DAILY AS PART OF DAILY CLEANUP.
6. ANY PORTION OF ROADWAYS OR SIDEWALKS THAT SUSTAIN EXCESSIVE CONSTRUCTION RELATED DAMAGE, IN THE OPINION OF APPLICABLE AGENCIES, SHALL BE REPAIRED AT CONTRACTOR EXPENSE IN A MANNER SPECIFIED BY THAT PARTICULAR AGENCY.
7. CONSTRUCTION MUST BE PER THE APPROVED SITE PLAN OF THE DRC (OR EQUIVALENT). DEVIATIONS IN ROADWAY, UTILITY OR DRAINAGE CONSTRUCTION WILL REQUIRE PRIOR WRITTEN APPROVAL OF THE CITY ENGINEER OR THE DIRECTOR OF PUBLIC SERVICES (OR EQUIVALENT). NOTE: SIGNIFICANT CHANGES FROM THE DRC APPROVED PLAN MAY REQUIRE THE OWNER/DEVELOPER TO SUBMIT A REVISED SITE PLAN FOR REVIEW THROUGH THE DRC AND MAY CAUSE PROJECT DELAYS.
8. OFF-SITE OR ROADWAY R-O-W CONSTRUCTION SHALL BE IN ACCORDANCE WITH ALL CONDITIONS OF THE APPROVED R-O-W PERMIT(S). A COPY OF THE APPROVED R-O-W PERMIT MUST BE KEPT ON-SITE AND READILY AVAILABLE DURING ALL CONSTRUCTION ACTIVITIES WITHIN THE R-O-W.
9. DURING THE CONSTRUCTION AND/OR MAINTENANCE OF THIS PROJECT, ALL SAFETY REGULATIONS ARE TO BE ENFORCED. THE CONTRACTOR OR HIS REPRESENTATIVE SHALL BE RESPONSIBLE FOR THE CONTROL AND SAFETY OF THE TRAVELING PUBLIC AND THE SAFETY OF HIS/HER PERSONNEL.
10. ALL CONSTRUCTION, MATERIALS AND WORKMANSHIP ARE TO BE IN ACCORDANCE WITH FLORIDA DEPARTMENT OF TRANSPORTATION SPECIFICATIONS AND STANDARDS.
11. CONTRACTOR IS RESPONSIBLE FOR CHECKING ACTUAL SITE CONDITIONS BEFORE STARTING CONSTRUCTION.
12. ANY DISCREPANCIES ON THE DRAWINGS SHALL BE BROUGHT TO THE ATTENTION OF THE ENGINEER BEFORE COMMENCING WORK.
13. THE CONTRACTOR SHALL BE RESPONSIBLE FOR OBTAINING ALL REQUIRED CONSTRUCTION PERMITS AND BONDS IF REQUIRED PRIOR TO CONSTRUCTION.
14. THE CONTRACTOR SHALL BE RESPONSIBLE FOR SUBMITTING TO THE ENGINEER A CERTIFIED RECORD SURVEY SIGNED AND SEALED BY A PROFESSIONAL LAND SURVEYOR REGISTERED IN THE STATE OF FLORIDA DEPICTING THE ACTUAL FIELD LOCATION OF ALL CONSTRUCTED IMPROVEMENTS THAT ARE REQUIRED BY THE JURISDICTIONAL AGENCIES FOR THE CERTIFICATION PROCESS. ALL SURVEY COSTS WILL BE THE CONTRACTORS RESPONSIBILITY. BOTH PAPER AND AUTOCAD FILES SHALL BE PROVIDED.
15. THE CONTRACTOR SHALL BE RESPONSIBLE FOR DOCUMENTING AND MAINTAINING AS-BUILT INFORMATION WHICH SHALL BE RECORDED AS CONSTRUCTION PROGRESSES OR AT THE COMPLETION OF APPROPRIATE CONSTRUCTION INTERVALS AND SHALL BE RESPONSIBLE FOR PROVIDING AS-BUILT DRAWINGS TO THE OWNER FOR THE PURPOSE OF CERTIFICATION TO JURISDICTIONAL AGENCIES AS REQUIRED. BOTH PAPER AND AUTOCAD SHALL BE PROVIDED.

EROSION CONTROL NOTES

1. THE STORM WATER POLLUTION PREVENTION PLAN (SWPPP) IS COMPRISED OF THE EROSION CONTROL PLAN, THE STANDARD DETAILS, THE PLAN NARRATIVE, ATTACHMENTS REFERENCED BY THE SWPPP, PLUS THE PERMIT AND ALL SUBSEQUENT REPORTS AND RELATED DOCUMENTS.
2. ALL CONTRACTORS AND SUBCONTRACTORS INVOLVED WITH STORM WATER POLLUTION PREVENTION SHALL OBTAIN A COPY OF THE STORM WATER POLLUTION PREVENTION PLAN AND THE STATE OF FLORIDA NATIONAL POLLUTANT DISCHARGE ELIMINATION SYSTEM GENERAL PERMIT (NPDES PERMIT) AND BECOME FAMILIAR WITH THEIR CONTENTS.
3. THE CONTRACTOR SHALL IMPLEMENT BEST MANAGEMENT PRACTICES AS REQUIRED BY THE SWPPP. ADDITIONAL BEST MANAGEMENT PRACTICES SHALL BE IMPLEMENTED AS DICTATED BY CONDITIONS AT NO ADDITIONAL COST TO THE OWNER THROUGHOUT ALL PHASES OF CONSTRUCTION.
4. PERMITS FOR ANY CONSTRUCTION ACTIVITY IMPACTING STATE WATERS OR REGULATED WETLANDS MUST BE MAINTAINED ON SITE AT ALL TIMES.
5. ALL WASH WATER (CONCRETE TRUCKS, VEHICLE CLEANING, EQUIPMENT CLEANING, ETC.) SHALL BE DETAINED AND PROPERLY TREATED OR DISPOSED.
6. SUFFICIENT OIL AND GREASE ABSORBING MATERIALS AND FLOTATION BOOMS SHALL BE MAINTAINED ON SITE OR READILY AVAILABLE TO CONTAIN AND CLEAN-UP FUEL OR CHEMICAL SPILLS AND LEAKS.
7. THE CONTRACTOR SHALL BE RESPONSIBLE FOR DUST CONTROL ON SITE. THE USE OF MOTOR OILS AND OTHER PETROLEUM BASED OR TOXIC LIQUIDS FOR DUST SUPPRESSION OPERATIONS IS PROHIBITED.
8. RUBBISH, TRASH, GARBAGE, LITTER, OR OTHER SUCH MATERIALS SHALL BE DEPOSITED INTO SEALED CONTAINERS. MATERIALS SHALL BE PREVENTED FROM LEAVING THE PREMISES THROUGH THE ACTION OF WIND OR STORM WATER RUNOFF.
9. ALL STORM WATER POLLUTION PREVENTION MEASURES PRESENTED ON THE PLAN SHALL BE INITIATED AS SOON AS PRACTICABLE.
10. DISTURBED PORTIONS OF THE SITE WHERE CONSTRUCTION ACTIVITY HAS PERMANENTLY STOPPED SHALL BE PERMANENTLY SEEDED. THESE AREAS SHALL BE SEEDED NO LATER THAN 7 DAYS AFTER THE LAST CONSTRUCTION ACTIVITY OCCURRED IN THESE AREAS.
11. THE CONTRACTOR SHALL BE RESPONSIBLE FOR REMOVING SEDIMENT IN THE DETENTION POND AND ANY SEDIMENT THAT MAY HAVE COLLECTED IN THE STORM DRAINS IN CONJUNCTION WITH THE STABILIZATION OF THE SITE.
12. ON-SITE & OFF SITE SOIL STOCKPILE AND BORROW AREAS SHALL BE PROTECTED FROM EROSION AND SEDIMENTATION THROUGH IMPLEMENTATION OF BEST MANAGEMENT PRACTICES. STOCKPILE AND BORROW AREA LOCATIONS SHALL BE NOTED ON THE EROSION CONTROL PLAN BY THE CONTRACTOR AND PERMITTED IN ACCORDANCE WITH GENERAL PERMIT REQUIREMENTS.
13. THE CONTRACTOR SHALL BE RESPONSIBLE FOR ADJUSTING THE EROSION CONTROL MEASURES (SILT FENCES, STABILIZATION, SEDIMENT BASINS, ETC.) AS NEEDED FOR EACH STAGE OF SITE WORK / GRADING.
14. NO GRADING, CUTTING, OR FILLING SHALL COMMENCE UNTIL SUCH TIME AS APPROPRIATE EROSION AND SEDIMENTATION CONTROL DEVICES HAVE BEEN INSTALLED BETWEEN ALL DISTURBED AREAS AND WATER BODIES, WATERCOURSES OR WETLANDS AND ANY CONVEYANCES SUCH AS DRAINAGE DITCHES, STORM DRAINS, AND INLETS.
15. ALL EROSION AND SEDIMENT CONTROL DEVICES SHALL BE INSTALLED PRECEEDING ANY DISTURBANCE OF THE LAND AND SHALL REMAIN FUNCTIONAL UNTIL THE CONTRIBUTING DISTURBED AREAS ARE STABILIZED. THE CONTRACTOR SHALL INSTALL ALL EROSION AND PREVENTION STRUCTURES SHOWN ON THE PLANS AT A MINIMUM AND IN FULL CONFORMANCE WITH ALL APPLICABLE WATER MANAGEMENT DISTRICT PERMITS AND REGULATIONS.
16. ALL CONTROL STRUCTURE AND OUTFALL CULVERT INSTALLATIONS SHALL BE PROTECTED WITH SEDIMENT BARRIERS AT A MINIMUM.
17. ALL DISTURBED AREAS (ABOVE NORMAL WATER LEVELS) UNLESS OTHERWISE NOTED HEREIN, SHALL BE SEEDED AND MULCHED WITHIN 7 DAYS OF FINAL GRADING. UNLESS OTHERWISE NOTED, ALL SLOPES STEEPER THAN 4:1 SHALL BE SODDED.

PAVING, GRADING, AND DRAINAGE NOTES

1. TRAFFIC CONTROL ON ALL FDOT, LOCAL AND COUNTY RIGHTS-OF-WAY SHALL MEET THE REQUIREMENTS OF THE MANUAL OF UNIFORM TRAFFIC CONTROL DEVICES (U.S. DOT/FHA) AND THE REQUIREMENTS OF THE STATE AND ANY LOCAL AGENCY HAVING JURISDICTION. IN THE EVENT THAT THE CONTRACT DOCUMENTS AND THE JURISDICTIONAL AGENCY REQUIREMENTS ARE NOT IN AGREEMENT, THE MOST STRINGENT SHALL GOVERN.
2. ALL OPEN AREAS WITHIN THE PROJECT SITE SHALL BE SODDED UNLESS INDICATED OTHERWISE ON THE LANDSCAPE PLAN.
3. THE CONTRACTOR SHALL INSTALL FILTER FABRIC OVER ALL DRAINAGE STRUCTURES FOR THE DURATION OF CONSTRUCTION AND UNTIL ACCEPTANCE OF THE PROJECT BY THE OWNER. ALL DRAINAGE STRUCTURES SHALL BE CLEANED OF DEBRIS AS REQUIRED DURING AND AT THE END OF CONSTRUCTION TO PROVIDE POSITIVE DRAINAGE FLOWS.
4. IF DEWATERING IS REQUIRED, THE CONTRACTOR SHALL OBTAIN ANY APPLICABLE REQUIRED PERMITS. THE CONTRACTOR IS TO COORDINATE WITH THE OWNER AND THE DESIGN ENGINEER PRIOR TO ANY EXCAVATION.
5. THE CONTRACTOR MUST REVIEW AND MAINTAIN A COPY OF THE ENVIRONMENTAL RESOURCE PERMIT COMPLETE WITH ALL CONDITIONS, ATTACHMENTS, EXHIBITS, AND PERMIT MODIFICATIONS IN GOOD CONDITION AT THE CONSTRUCTION SITE. THE COMPLETE PERMIT MUST BE AVAILABLE FOR REVIEW UPON REQUEST BY WATER MANAGEMENT DISTRICT REPRESENTATIVES.
6. THE CONTRACTOR SHALL ENSURE THAT ISLAND PLANTING AREAS AND OTHER PLANTING AREAS ARE NOT COMPACTED AND DO NOT CONTAIN ROAD BASE MATERIALS. THE CONTRACTOR SHALL ALSO EXCAVATE AND REMOVE ALL UNDESIRABLE MATERIAL FROM ALL AREAS ON THE SITE TO BE PLANTED AND PROPERLY DISPOSED OF IN A LEGAL MANNER.
7. THE CONTRACTOR SHALL BE RESPONSIBLE FOR PROTECTING EXCAVATIONS AGAINST COLLAPSE AND WILL PROVIDE BRACING, SHEETING OR SHORING AS NECESSARY. DE-WATERING METHODS SHALL BE USED AS REQUIRED TO KEEP TRENCHES DRY WHILE PIPE AND APPURTENANCES ARE BEING PLACED.
8. THE CONTRACTOR WILL STABILIZE BY SEED AND MULCH, SOD, OR OTHER APPROVED MATERIALS ANY DISTURBED AREAS WITHIN ONE WEEK FOLLOWING CONSTRUCTION OF THE UTILITY SYSTEMS AND PAVEMENT AREAS. CONTRACTOR SHALL MAINTAIN SUCH AREAS UNTIL FINAL ACCEPTANCE BY OWNER. CONTRACTOR TO COORDINATE WITH OWNER REGARDING TYPE OF MATERIAL, LANDSCAPING AND IRRIGATION IMPROVEMENTS TO FOLLOW.
9. SITE GRADING, PAVING AND DRAINAGE MATERIALS AND CONSTRUCTION SHALL CONFORM TO FDOT STANDARD SPECIFICATIONS FOR ROAD AND BRIDGE CONSTRUCTION.
10. IMMEDIATELY AT ONSET OF CONSTRUCTION, CONTRACTOR SHALL FIELD VERIFY HORIZONTAL AND VERTICAL LOCATIONS OF ALL EXISTING UTILITIES CRITICAL TO COMPLETING THE PROJECT (INCLUDING WATER, SEWER, POWER, TELEPHONE, GAS, AND CABLE TV) AND SHALL EVALUATE POTENTIAL CONFLICTS. ALL SUCH CONFLICTS SHALL BE REPORTED TO ENGINEER/OWNER IMMEDIATELY UPON DISCOVERY.
11. PRIOR TO CONSTRUCTION, CONTRACTOR SHALL FIELD STAKE AND ROPE OFF CONSERVATION AREA LINES. OWNER RESERVES THE RIGHTS TO CHECK THE STAKING AND ROPING AND REQUIRE IT TO BE RELOCATED IF NECESSARY. IT SHALL REMAIN IN PLACE UNTIL ADJACENT CONSTRUCTION IS COMPLETE.
12. CONTRACTOR SHALL BE EXTREMELY CAUTIOUS WHEN WORKING NEAR TREES WHICH ARE TO BE SAVED, WHETHER SHOWN IN THE PLANS OR DESIGNATED IN THE FIELD.
13. ALL SIGNAGE, PAVEMENT MARKING AND TRAFFIC CONTROL DEVICES SHALL BE IN ACCORDANCE WITH FDOT "ROADWAY AND TRAFFIC DESIGN STANDARDS" AND FHWA "MANUAL OF UNIFORM TRAFFIC CONTROL DEVICES".
14. REGULATORY SIGNS (STOP, ETC.) SHALL BE PAID FOR BY THE CONTRACTOR AND IN PLACE PRIOR TO FINAL INSPECTION OF PAVING AND DRAINAGE IMPROVEMENTS.
15. BLUE REFLECTIVE PAVEMENT MARKERS SHALL BE PLACED OPPOSITE FIRE HYDRANTS IN THE CENTER OF THE NEAREST TRAVELED LANE TO MARK THEIR LOCATIONS.
16. CONTRACTOR IS RESPONSIBLE FOR GRADING ALL PAVEMENTS TO DRAIN POSITIVELY. INTERSECTIONS SHALL BE TRANSITIONED TO PROVIDE SMOOTH DRIVING SURFACE WHILE MAINTAINING POSITIVE DRAINAGE. SHOULD AREAS OF POOR DRAINAGE BE OBSERVED, CONTRACTOR SHALL NOTIFY THE ENGINEER PRIOR TO PLACEMENT OF CURBS OR PAVEMENT COURSES, SO THAT RECOMMENDATIONS FOR CORRECTION MAY BE MADE.
17. PROPOSED AND EXISTING SIDEWALKS SHALL BE RAMPED FLUSH WITH PAVEMENT. RAMPS SHALL NOT EXCEED SLOPES OF 14 HORIZONTAL TO 1 VERTICAL.
18. FINISHED FLOOR ELEVATIONS ARE MINIMUM ELEVATIONS REQUIRED TO SATISFY DRAINAGE AND/OR 100-FLOODPLAING REQUIREMENTS. PAD ELEVATIONS, IMMEDIATELY OUTSIDE OF BUILDING WALLS, SHALL BE NO MORE THAN 8 INCHES BELOW THE FINISHED FLOOR ELEVATIONS SHOWN.
19. CONTRACTOR IS RESPONSIBLE FOR IDENTIFYING AND DISPOSING ALL WASTE MATERIALS CONSISTENT WITH ALL RULES AND REGULATIONS APPLICABLE TO THE SPECIFIC MATERIAL FOUND. ALL DELETERIOUS SUBSURFACE MATERIAL (I.E. MUCK, PEAT, BURIED DEBRIS, ETC.) IS TO BE EXCAVATED AND REPLACED WITH SUITABLE/COMPACTED SOILS, AS DIRECTED BY THE OWNER, THE OWNERS ENGINEERS, OR OWNERS SOILS TESTING COMPANY. DELETERIOUS MATERIAL IS TO BE STOCKPILED OR REMOVED FROM THE SITE AS DIRECTED BY THE OWNER. EXCAVATED AREAS ARE TO BE BACKFILLED WITH APPROVED MATERIALS AND COMPACTED AS SHOWN ON THESE PLANS. CONTRACTOR IS RESPONSIBLE FOR ACQUIRING ANY PERMITS THAT ARE NECESSARY FOR REMOVING DELETERIOUS MATERIAL FROM THE SITE.
20. ALL NECESSARY FILL AND EMBANKMENT THAT IS PLACED DURING CONSTRUCTION SHALL CONSIST OF MATERIAL SPECIFIED BY THE OWNER'S SOILS TESTING COMPANY OR ENGINEER AND BE PLACED AND COMPACTED ACCORDING TO THESE PLANS.
21. PROPOSED SPOT ELEVATIONS REPRESENT FINISHED PAVEMENT, SIDEWALK, OR GROUND SURFACE GRADES, UNLESS OTHERWISE NOTED.
22. CURBING SHALL BE PLACED AT THE EDGES OF ALL PAVEMENT, UNLESS OTHERWISE NOTED. REFER TO THE LATEST EDITION OF F.D.O.T. "ROADWAY AND TRAFFIC DESIGN STANDARDS" FOR DETAILS AND SPECIFICATIONS OF ALL FDOT TYPE CURB AND GUTTERS CALLED FOR IN THESE PLANS.
23. THE CONTRACTOR SHALL RESTORE OFF-SITE CONSTRUCTION AREAS TO EQUAL AND/OR BETTER CONDITION THAN EXISTING PRIOR TO START OF CONSTRUCTION.
24. UNLESS OTHERWISE NOTED, GRADE TO MEET EXISTING ELEVATION AT PROPERTY LINES.
25. SURVEY MONUMENTS OR BENCHMARKS, WHICH HAVE TO BE DISTURBED BY THIS WORK, SHALL BE REPLACED UPON COMPLETION OF WORK BY A REGISTERED LAND SURVEYOR. ALL SURVEY COSTS WILL BE CONTRACTORS RESPONSIBILITY.
26. FINAL GRADES SHOWN INCLUDE SOD HEIGHT. ALL AREAS SHALL BE GRADED TO DRAIN AWAY FROM THE BUILDINGS.
27. IF WORK IS SUSPENDED OR DELAYED FOR 14 DAYS, THE CONTRACTOR SHALL TEMPORARILY STABILIZE THE DISTURBED AREAS AT NO ADDITIONAL COST TO THE OWNER.
28. STORM DRAINS SHALL BE REINFORCED CONCRETE PIPE, PER ASTM C-76 CLASS III, UNLESS OTHERWISE SPECIFIED. LIFTING HOLES ARE PROHIBITED.
29. ALL STORM STRUCTURES SHALL CONFORM WITH FDOT STANDARD INDEX DRAWINGS AND SPECIFICATIONS EXCEPT THAT DITCH BOTTOM INLETS IN PAVED AREAS SHALL HAVE TRAVERSABLE, TRAFFIC BEARING, GRATES SUPPORTED BY STEEL ANGLE SEATS OR SUPPORTED ON FOUR SIDES. GRATES SHALL BE CAST IRON UNLESS OTHERWISE SPECIFIED OR APPROVED.
30. ALL CONCRETE CURBS, SIDEWALKS, INLET TOPS, ETC. SHALL BE 3000 PSI MINIMUM, UNLESS OTHERWISE SPECIFIED.
31. THE CONTRACTOR IS RESPONSIBLE FOR COORDINATING APPLICABLE TESTING WITH THE SOILS ENGINEER. TESTS WILL BE REQUIRED PURSUANT WITH THE SOILS REPORT. UPON COMPLETION OF WORK THE SOILS ENGINEER WILL SUBMIT CERTIFICATIONS TO THE OWNER AND OWNER'S ENGINEER STATING THAT ALL REQUIREMENTS HAVE BEEN MET.
32. A QUALIFIED TESTING LABORATORY SHALL PERFORM ALL TESTING NECESSARY TO ASSURE COMPLIANCE OF THE IN-PLACE MATERIALS AS REQUIRED BY THESE PLANS, THE VARIOUS AGENCIES AND PERMIT CONDITIONS. SHOULD ANY RETESTING BE REQUIRED DUE TO THE FAILURE OF ANY TESTS TO MEET THE REQUIREMENTS, THE CONTRACTOR WILL BEAR ALL COSTS OF SAID RETESTING
33. THE STORM DRAINAGE PIPING SYSTEM SHALL BE SUBJECT TO A VISUAL INSPECTION BY THE OWNER'S ENGINEER PRIOR TO THE PLACEMENT OF BACKFILL. CONTRACTOR TO NOTIFY THE ENGINEER 48 HOURS IN ADVANCE TO SCHEDULE INSPECTION.
34. THE CONTRACTOR SHALL MAINTAIN AND PROTECT FROM MUD, DIRT, DEBRIS, ETC. THE STORM DRAINAGE SYSTEM UNTIL FINAL ACCEPTANCE OF THE PROJECT. THE STORM SYSTEM WILL BE RE-INSPECTED BY THE OWNER'S ENGINEER PRIOR TO APPROVAL FOR CERTIFICATE OF OCCUPANCY PURPOSES. THE CONTRACTOR MAY BE REQUIRED TO RE-CLEAN PIPES AND INLETS FOR THESE PURPOSES.

811
Know what's **below.**
Call before you dig.

No.	Date	Comment

SCALES:
AS SHOWN

eda 40 years
engineers • surveyors • planners
EB 2389
2404 N.W. 43rd ST, GAINESVILLE, FLORIDA 32606-6602
TEL. (352) 373-3541 FAX. (352) 373-7249
www.edafl.com mail@edafl.com

Project:
HOLIDAY INN ALACHUA
CITY OF ALACHUA, FLORIDA

Sheet title:
LEGEND, SYMBOLS AND NOTES

Project phase: CITY OF ALACHUA RESUBMITTAL
Designed: SJR Drawn: MAB Checked: TAR
Project No. 16-233 Date: 12/19/2016
Professional Engineer of Record:
Sergio J. Reyes, P.E. 47311
Engineer Certificate No.

SERGIO J. REYES LICENSE No. 47311 STATE OF FLORIDA PROFESSIONAL ENGINEER

Sheet No.:
C0.10

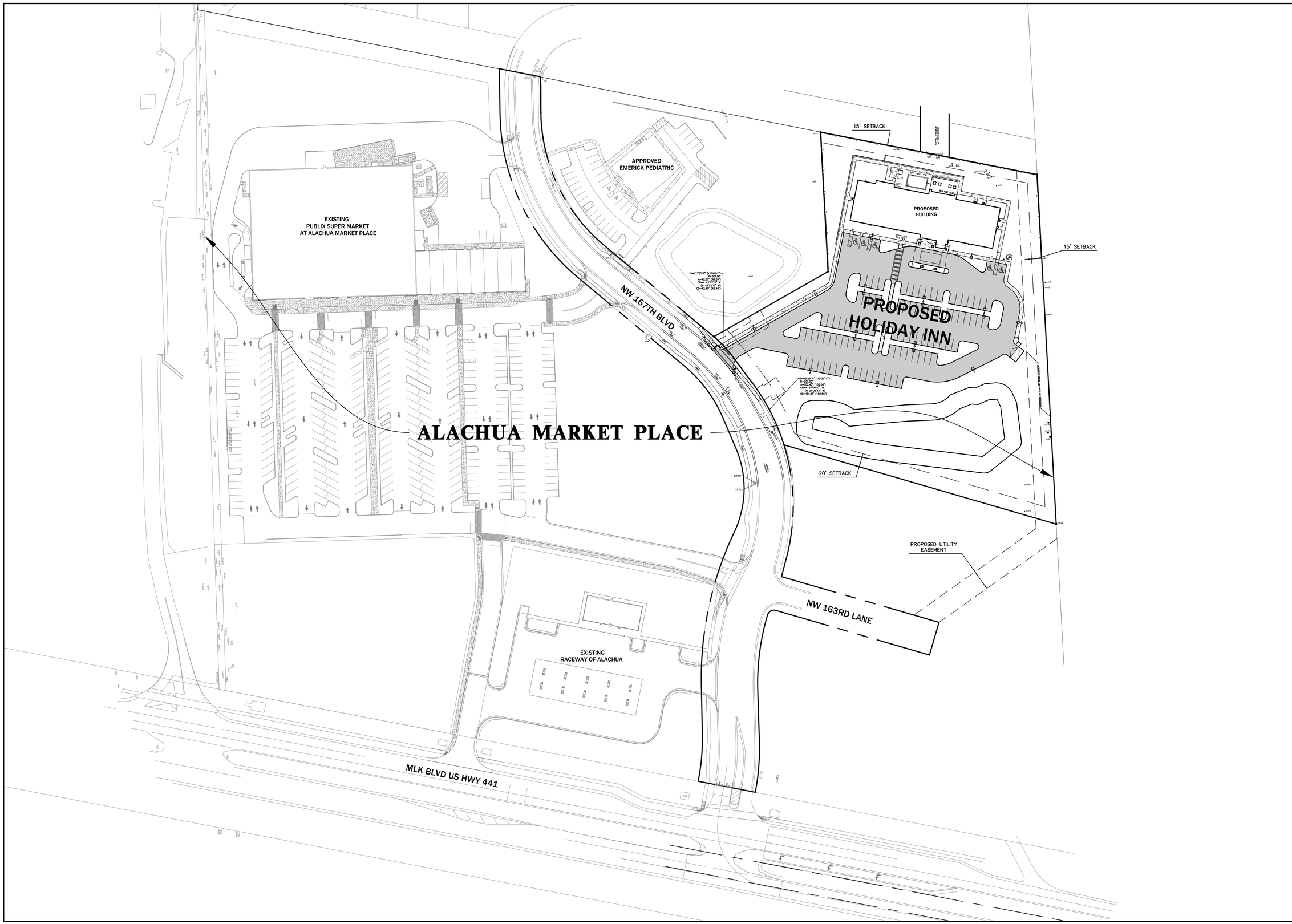

NORTH

SCALE: 1"= 60'

0 30 60 120

GRAPHIC SCALE

No.	Date	Comment

eda 70 years

engineers • surveyors • planners

EB-2389

2404 N.W. 43rd ST, GAINESVILLE, FLORIDA 32606-6402

TEL: (352) 373-3541 FAX: (352) 373-7268

www.edafl.com mail@edafl.com

Project:

HOLIDAY INN ALACHUA
CITY OF ALACHUA, FLORIDA

Sheet title:

DEVELOPMENT PLAN

Project phase:

CITY OF ALACHUA RESUBMITTAL

Designed: SJM Drawn: JMB Checked: TAR

Project No. 16-283 Date: 12/19/2016

Professional Engineer of Record:

STATE OF FLORIDA PROFESSIONAL ENGINEER

Sergio J. Manzano, P.E.

Engineer's Certificate No. 67311

Sheet No.:

C0.20

\\server3\engprojects\Holiday Inn - Alachua\Plans\Current DWG\H162331.dwg, C0.20 - DEV PLAN, 12/19/2016 3:11:23 PM, TAR

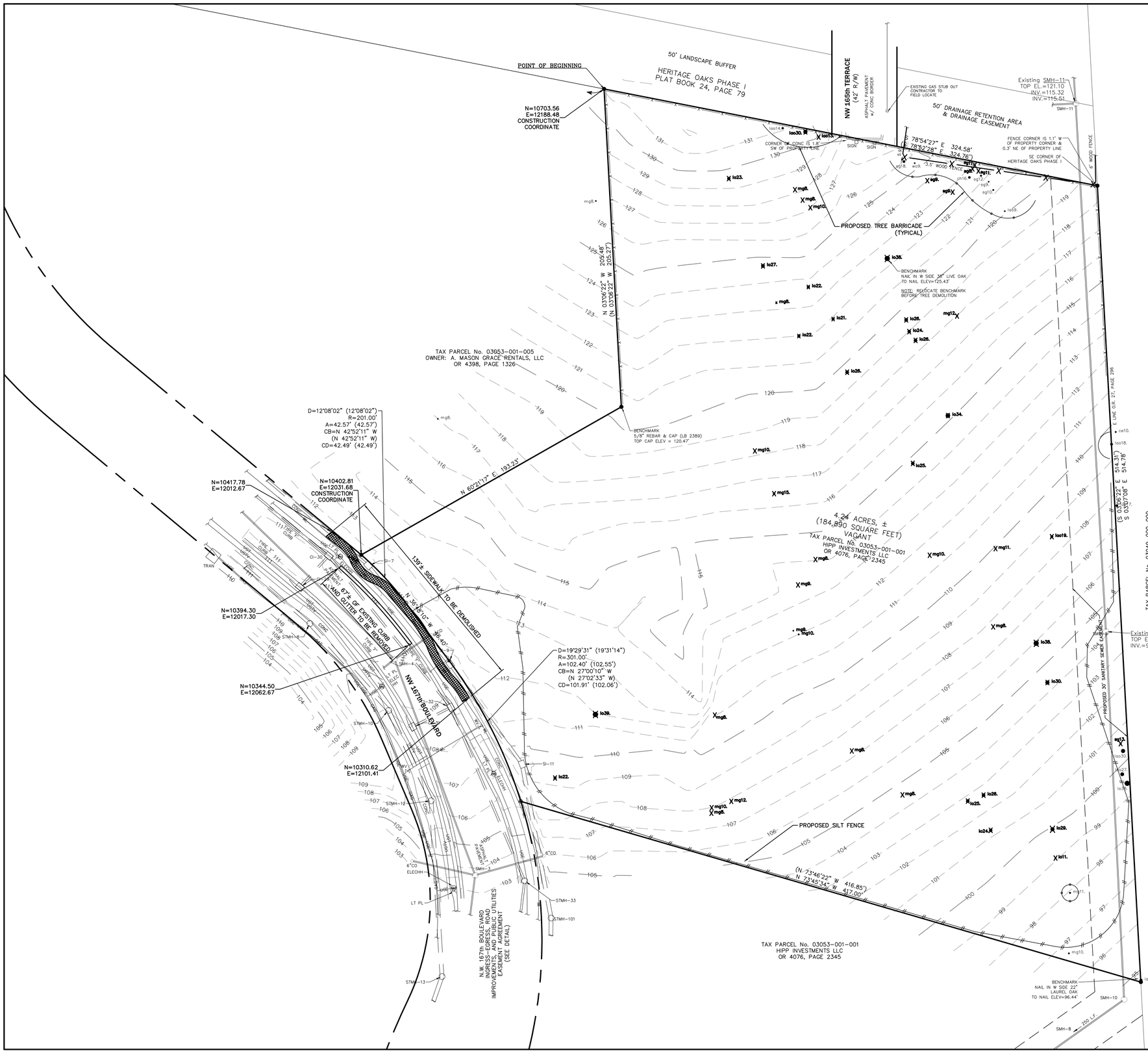

DEMOLITION NOTES

1. EROSION CONTROLS ARE TO BE INSTALLED AND INSPECTED PRIOR TO BEGINNING DEMOLITION WORK.
2. IN AREAS WHERE PROPOSED CURBING IS TO BE PLACED, THE ASPHALT PAVEMENT SHALL BE REMOVED TO THE FACE OF CURB TO ALLOW PLACEMENT OF 6" STANDARD CONCRETE CURBING.
3. IN AREAS OF PROPOSED LANDSCAPE AREA THE PAVEMENT, LIMEROCK BASE AND 12" OF THE STABILIZED SUBGRADE SHALL BE REMOVED. COORDINATE WITH LANDSCAPE ARCHITECT TO DETERMINE IF ADDITIONAL REMOVAL IS REQUIRED TO MAKE AREA SUITABLE FOR LANDSCAPE PURPOSES. THE REMOVED LIMEROCK BASE SHALL NOT BE USED IN THE BASE FOR THE NEW PAVEMENT (PER FDOT SECTION 200), BUT THE REMOVED BASE CAN BE USED IN THE STABILIZATION OF SUBGRADE. SEE GRADING PLAN FOR BACKFILL REQUIREMENTS.
4. ALL CONSTRUCTION DEBRIS, LIMEROCK, EXCESS OF BUILDER'S SAND, CONCRETE AND MORTAR DEBRIS, EXISTING WEEDS AND GRASSES, ALL FOREIGN MATERIALS IN THE PLANTING BED AND SOD AREAS SHALL BE REMOVED AND 36" OF CLEAN FILL OF PH 5.5 – 6.5 SHALL BE INSTALLED PRIOR TO ANY INSTALLATION OF PLANTS OR TREES.
5. SEE DIMENSION PLAN FOR DIMENSIONING OF PROPOSED LANDSCAPE AREAS.
6. CONTRACTOR IS RESPONSIBLE FOR PROTECTION OF EXISTING UTILITIES TO REMAIN AS SHOWN IN THE UTILITY PLAN. ANY EXISTING UTILITIES TO BE REMOVED SHALL BE COORDINATED WITH THE ASSOCIATED UTILITY COMPANY, AND PERFORMED IN ACCORDANCE WITH ALL APPLICABLE REGULATIONS.
7. SEE ELECTRICAL AND IRRIGATION PLANS FOR COORDINATION OF PAVEMENT CUTS FOR ASSOCIATED CONDUITS.

NOTE:

CONTRACTOR SHALL HAVE EROSION & SEDIMENTATION CONTROL DEVICES FOUND ON THE EROSION AND SEDIMENTATION CONTROL PLAN (SHEET C3.10) IN PLACE BEFORE BEGINNING ANY DEMOLITION OR CLEARING WORK.

No.	Date	Comment

NORTH

SCALE: 1"= 20'

0 10 20 40

GRAPHIC SCALE

edsa 70 years
engineers • surveyors • planners
EB 2389
2404 N.W. 43rd ST. GAINESVILLE, FLORIDA 32606-6452
TEL.(352) 373-3541 FAX: (352) 373-7268
www.edsafl.com mail@edsafl.com

Project:

HOLIDAY INN ALACHUA
CITY OF ALACHUA, FLORIDA

Sheet title:

DEMOLITION PLAN

Project phases:

CITY OF ALACHUA RESUBMITTAL

Designed: S.J.P. Drawn: J.M.R. Checked: TAR

Project No. 2015-0261 Date: 12/19/2016

Professional Engineer of Record:

STATE OF FLORIDA PROFESSIONAL ENGINEER Sergio J. Pantano, P.E. No. 73311

Engineer of Record Certificate No.

Sheet No.:

C0.30

\\server3\engprojects\Holiday Inn - Alachua\Plans\Current DWG\H162331L.dwg, C0.30 - DEMO, 12/19/2016 3:11:28 PM, TAR

POINT OF BEGINNING

N=10703.56
E=12188.48
CONSTRUCTION
COORDINATE

50' LANDSCAPE BUFFER

HERITAGE OAKS PHASE I
PLAT BOOK 24, PAGE 79

NW 165th TERRACE
(42' R/W)

ASPHALT PAVEMENT
w/ CONC BORDER

50' DRAINAGE RETENTION AREA
& DRAINAGE EASEMENT

15' SETBACK

25' BUFFER

S 78°54'27" E 324.58'
(S 78°52'28" E 324.76')

PROPOSED 6 FT.
PRIVACY FENCE
(SEE SHEET C2.10
FOR DETAIL)

PROPOSED
RETAINING WALL
(TO BE DESIGNED
BY OTHERS)

PROPOSED 6 FT.
PRIVACY FENCE
(SEE SHEET C2.10
FOR DETAIL)

PROPOSED POOL
EQUIPMENT AREA

N=10632.89
E=12243.62

166'

51.56'

51.55'

133'

5'

56.59'

N=10591.88
E=12453.00

N=10573.42
E=12231.97

36.37'

N 03°06'22" W 205.48'
(N 03°06'22" W 205.27')

**PROPOSED
BUILDING**

N=10564.71
E=12500.38

MH-1

HANDICAPPED
PARKING SIGN
(TYP. OF 3)

10 BICYCLE SPACES
(5 RACKS)

15'

7'

N=10532.41
E=12441.36

5' CONC. SIDEWALK

LOADING AREA

22'

8'

52'

24'

R50'

R4'

R5'

R12'

R24'

R36'

9'

12'

5'

20'

16.96'

18'

10'

22.83'

10.34'

25.1'

9' (TYP.)

TX

N=10508.26
E=12462.10

N=10475.36
E=12463.85

N=10467.85
E=12450.26

N=10456.28
E=12446.25

N=10437.38
E=12480.98

N=10413.35
E=12437.84

N=10397.14
E=12457.52

N=10381.73
E=12487.65

N=10379.95
E=12438.50

N=10365.81
E=12475.55

N=10343.92
E=12393.37

N=10338.17
E=12362.30

N=10337.46
E=12346.00

N=10328.91
E=12305.50

N=10326.67
E=12307.46

N=10512.05
E=12224.59

PROPOSED 10'
PEDESTRIAN
CROSSWALK

N=10496.06
E=12243.81

4 SPACES @ 9'=36'

N=10473.09
E=12279.36

4 SPACES @ 9'=36'

7 SPACES @ 9'=63'

N=10456.21
E=12365.65

7 SPACES @ 9'=63'

N=10442.22
E=12437.01

7 SPACES @ 9'=63'

N=10450.77
E=12183.69

N=10469.28
E=12216.22

N=10437.81
E=12181.13

N=10416.69
E=12160.01

9 SPACES @ 9'=81'

N=10406.43
E=12266.25

12 SPACES @ 9'=108'

11 SPACES @ 9'=99'

N=10382.11
E=12387.32

N=10396.65
E=12397.60

N=10377.28
E=12361.19

N=10360.25
E=12364.34

8 SPACES @ 9'=72'

9 SPACES @ 9'=81'

9 SPACES @ 9'=81'

N=10412.03
E=12135.84

N=10385.72
E=12086.03

N=10399.22
E=12093.11

N=10377.93
E=12055.79

N=10378.35
E=12137.22

N=10359.73
E=12138.67

N=10346.79
E=12216.90

STANDARD 6"
CURB (TYP.)

PROPOSED LIGHT POLE (TYP)
(SEE PHOTOMETRIC)

4.24 ACRES, ±
(184,890 SQUARE FEET)
VACANT

TAX PARCEL No. 03053-001-001
HIPP INVESTMENTS LLC
OR 4076, PAGE 2345

TAX PARCEL No. 03053-001-005
OWNER: A. MASON GRACE RENTALS, LLC
OR 4398, PAGE 1326

D=12°08'02" (12°08'02")
R=201.00'
A=42.57' (42.57')
CB=N 42°52'11" W
(N 42°52'11" W)
CD=42.49' (42.49')

5' SIDEWALK

N 60°21'17" E 193.23'

PROPOSED UTILITY
EASEMENT FOR
FIRE HYDRANT

N=10402.81
E=12031.68
CONSTRUCTION
COORDINATE

STOP
SIGN

HANDICAPPED RAMP
PER FDOT INDEX
304 (CR-L)

ASPHALT
PAVEMENT

N=10387.56
E=12024.68

R20'

24" WHITE
STOP BAR

N=10370.09
E=12041.92

12" WHITE
CROSSWALK
(TYP.)

HANDICAPPED RAMP
PER FDOT INDEX
304 (CR-R)

N 60°48'10" W

46.40'

5' SIDE WALK

20'
SETBACK

N=10344.50
E=12062.67

MATCH EXISTING
SIDEWALK

NW 167th BOULEVARD

PROPOSED
UTILITY
EASEMENT FOR
WATER SERVICE

D=19°29'31" (19°31'14")
R=301.00'
A=102.40' (102.55')
CB=N 27°00'10" W
(N 27°02'33" W)
CD=101.91' (102.06')

TAX PARCEL No. 03049-000-000
MEGAHEE ENTERPRISES, LTD
OR 2209, PAGES 2644-2652

(S 03°06'22" E 514.31')
S 03°07'08" E 514.78'

PROPOSED 30' SANITARY SEWER EASEMENT

FLUSH

10' X 20' CONC.
DUMPSTER PAD
WITH SCREENING

108.00

102.00

NORTH
SCALE: 1"= 20'
0 10 20 40
GRAPHIC SCALE

No.	Date	Comment

eda 70 years
engineers • surveyors • planners
EB 2389
2404 NW 43rd ST, GAINESVILLE, FLORIDA 32606-6602
TEL (352) 373-3541 FAX: (352) 373-7268
www.edafl.com mail@edafl.com

Project:
HOLIDAY INN ALACHUA
CITY OF ALACHUA, FLORIDA

Sheet title:
DIMENSION PLAN

Project phases:
CITY OF ALACHUA RESUBMITTAL

Designed: S.J.P. Drawn: J.MAR Checked: TAR
Project No. 2016-283 Date: 12/19/2016

Professional Engineer of Record:
STATE OF FLORIDA
Sergio J. Parapar, P.E.
Engineer No. 73311
Certificate No.

Sheet No.:
C1.00

\\server3\engprojects\Holiday Inn - Alachua\Plans\Current DWG\H16233\1.dwg, C1.00 - DIM, 12/19/2016 3:11:33 PM, TAR

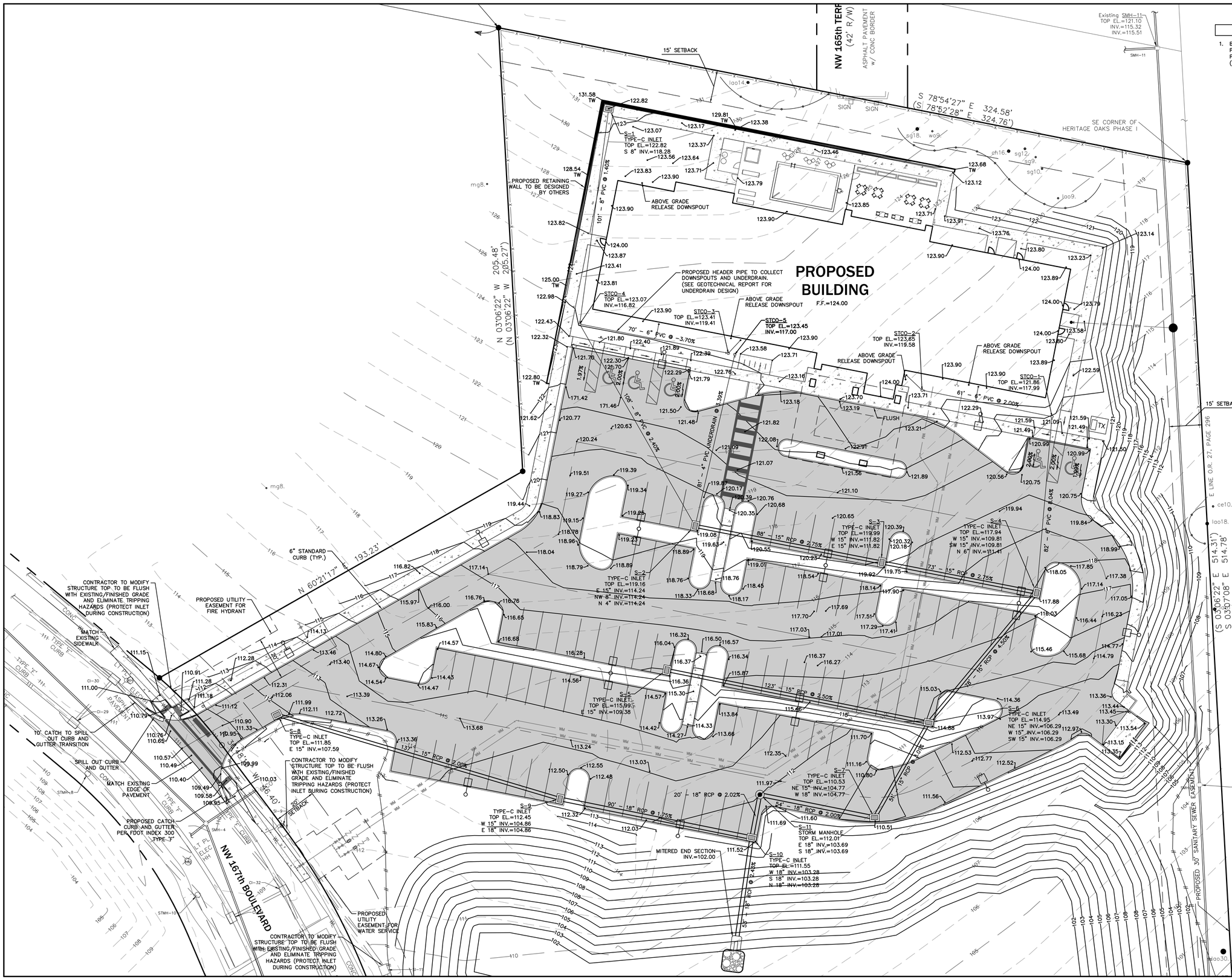

GENERAL NOTES

1. BUILDING UNDERDRAIN SHALL BE INSTALLED PER GEOTECHNICAL SITE EXPLORATION (GSE PROJECT #12872) AND FOUNDATION PLANS (BY OTHERS).

No.	Date	Comment

eda 40 years
engineers • surveyors • planners
EB 2399
2404 NW 43rd ST, GAINESVILLE, FLORIDA 32606-6402
TEL (352)373-3541 FAX: (352)373-7545
www.eda-fl.com mail@eda-fl.com

Project: HOLIDAY INN ALACHUA
CITY OF ALACHUA, FLORIDA

Sheet title: PAVING, GRADING AND DRAINAGE PLAN

Project phase: CITY OF ALACHUA RESUBMITTAL

Designed: S.J.P. Drawn: J.M.R. Checked: TAR

Project No. 16-283 Date: 12/19/2016

Professional Engineer of Record: STATE OF FLORIDA PROFESSIONAL ENGINEER Sergio J. Pinto, P.E. No. 47311 Engineer Certificate No.

Sheet No.: C2.00

\\server3\engprojects\Holiday Inn - Alachua\Plans\Current DWG\H1623331.dwg, C2.00 - PGD, 12/19/2016 3:45:02 PM, TAR

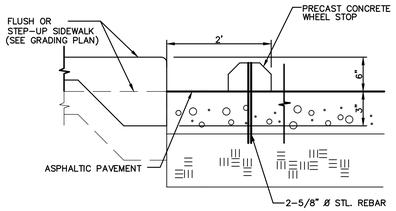

SIDEWALK W/ PREFAB WHEEL STOP

N.T.S.

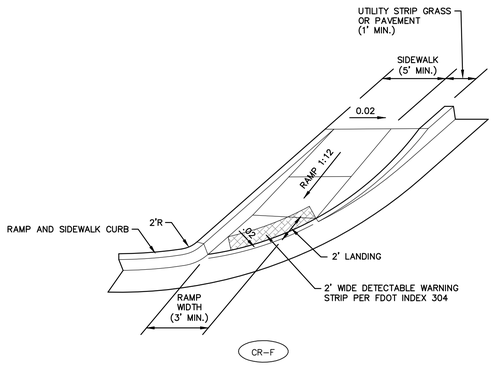

SIDEWALK CURB RAMPS-FDOT INDEX 304

N.T.S.

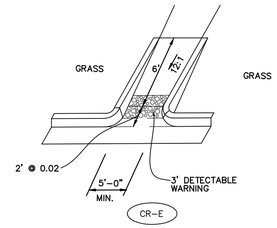

CURB RAMP (TYP.)

N.T.S.

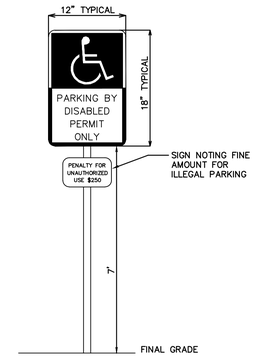

SIGN NOTES:

1. SIGN TO BE MADE OF 0.063" STEEL PAINTED WITH TRAFFIC PAINT
2. HANDICAP SIGN TO BE AS SHOWN ABOVE OR AS REQUIRED BY LOCAL CODE PAINT SIGN BLUE AND WHITE

HANDICAP PARKING SIGN DETAIL

N.T.S.

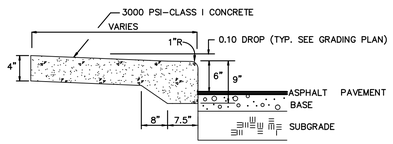

TYPICAL STEPUP SIDEWALK

N.T.S.

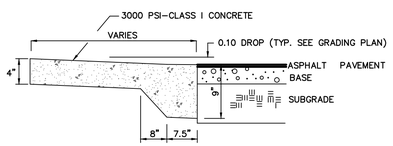

TYPICAL FLUSH SIDEWALK DETAIL

N.T.S.

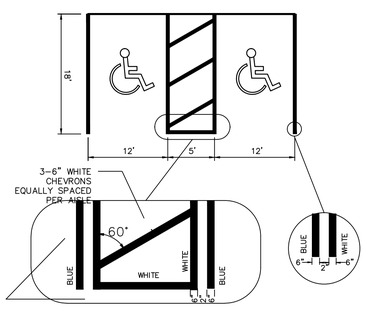

HANDICAP STRIPING DETAIL

N.T.S.

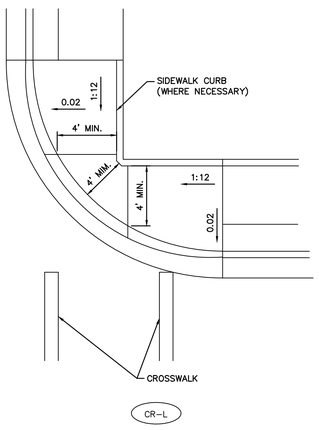

SIDEWALK CURB RAMPS-FDOT INDEX 304

N.T.S.

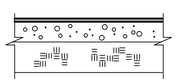

1-1/4" TYPE SP-9.5, ASPHALTIC CONCRETE

6" LIMEROCK BASE, COMPACTED TO 98% OF MODIFIED PROCTOR DENSITY

12" SUBGRADE, LBR 40, COMP. TO 98% MODIFIED PROCTOR DENSITY

TYPICAL ASPHALT PAVEMENT DETAIL

N.T.S.

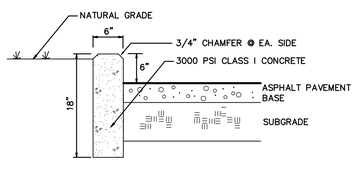

6" STANDARD CURB DETAIL

N.T.S.

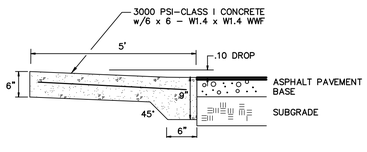

CONCRETE DUMPSTER PAD DETAIL

N.T.S.

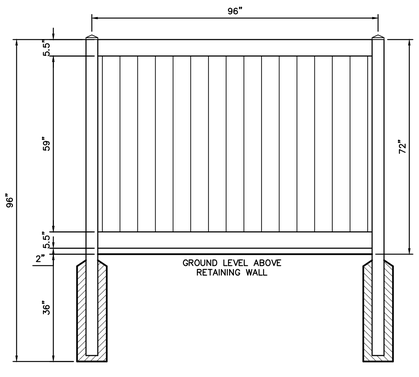

FENCE DETAIL

N.T.S.

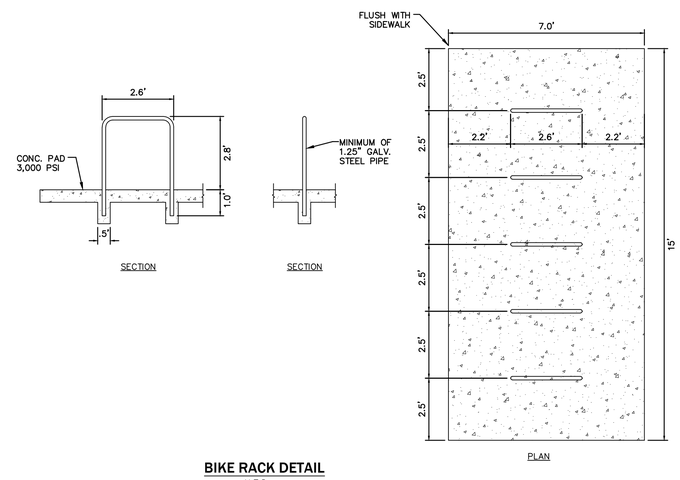

BIKE RACK DETAIL

N.T.S.

PAVING, GRADING AND DRAINAGE SPECIFICATIONS

1. GENERAL: ALL ROADWAY AND DRAINAGE CONSTRUCTION, INCLUDING MATERIALS, CONSTRUCTION TECHNIQUES, AND TECHNICAL STANDARDS, SHALL BE IN ACCORDANCE WITH THE LATEST F.D.O.T. STANDARD SPECIFICATIONS FOR ROAD AND BRIDGE CONSTRUCTION, AND THE LATEST F.D.O.T. ROADWAY AND TRAFFIC DESIGN STANDARDS.

2. ALL AREAS OF NEW CONSTRUCTION SHALL BE PREPARED AFTER SITE DEMOLITION. TOP SOIL REMAINING ONSITE MAY BE STOCKPILED FOR FINE GRADING IN LANDSCAPED AREAS, IF SUITABLE. THE CONTRACTOR SHALL FURNISH ALL FILL REQUIRED AND DISPOSE OF ALL EXCESS OR UNSUITABLE MATERIAL OFFSITE IN ACCORDANCE WITH ALL REGULATORY REQUIREMENTS.

3. ALL NEW ASPHALT PAVEMENT CONSTRUCTION SHALL CONFORM TO THE FOLLOWING SPECIFICATIONS:

   A. EARTHWORK: FILL MATERIALS SHALL CONFORM TO AASHTO SOIL GROUPS A-1, A-3, OR A-2-4 AND SHALL BE PLACED IN 6"-12" LOOSE LIFTS AND COMPACTED TO 98% DENSITY USING MODIFIED PROCTOR METHOD (AASHTO T-180).

   B. SUBSOIL EXCAVATION: WHERE SUBSOIL EXCAVATION IS REQUIRED, UNSUITABLE MATERIALS SHALL BE REMOVED TO A DEPTH OF 18" BELOW THE LIMEROCK BASE AND BACKFILLED WITH CLEAN FILL.

   C. STABILIZED SUBGRADE: ALL STABILIZED MATERIAL SHALL BE TYPE 'B' CONFORMING TO SECTION 914-3 AND PLACED ACCORDING TO SECTION 160 IN ONE 12" MINIMUM COMPACTED LIFT. SUBGRADE SHALL BE STABILIZED TO A MINIMUM LBR VALUES AND DENSITIES AS SHOWN IN THE TYPICAL SECTIONS.

   D. BASE COURSE: ALL MATERIAL SHALL BE LIMEROCK CONFORMING TO SECTION 911 AND PLACED ACCORDING TO SECTION 200 IN ONE 6" MINIMUM COMPACTED LIFT OR DOUBLE COMPACTED LIFT. ALL BASE MATERIAL SHALL BE COMPACTED TO 98% DENSITY BY MODIFIED PROCTOR METHOD (AASHTO T-180). THE PRIME COAT SHALL CONFORM TO SECTION 300.

   E. ASPHALTIC CONCRETE: ALL ASPHALTIC CONCRETE MATERIAL SHALL BE AS PER DESIGN SECTIONS AND SHALL CONFORM TO SECTION 334. ALL ASPHALTIC CONCRETE CONSTRUCTION SHALL CONFORM TO SECTION 330. ASPHALT SHALL NOT INCLUDE ANY RAP MATERIAL UNLESS APPROVED BY ENGINEER.

4. ALL CONCRETE USED FOR CONSTRUCTION OF DRAINAGE STRUCTURES, SIDEWALKS, AND CURBING SHALL BE CLASS I CONFORMING TO SECTION 346.

5. REINFORCED CONCRETE PIPE SHALL CONFORM TO SECTION 941.

6. ALL PAVEMENT MARKINGS REQUIRED IN THE R/W SHALL BE THERMOPLASTIC AND INCLUDE RAISED PAVEMENT MARKERS, WHERE REQUIRED CONFORMING TO SECTION 711.

7. ALL PAVEMENT MARKING, SYMBOLS AND STRIPING WITHIN THE SITE SHALL MEET THE LATEST FLORIDA HANDICAP ACCESSIBILLITY CODE. PAVEMENT MARKING SHALL BE 4" BLUE/WHITE (HANDICAP) OR WHITE (REGULAR) AND SHALL CONFORM TO THE LATEST F.D.O.T. AND M.U.T.C.D. STANDARDS.

8. THE CONTRACTOR SHALL BE RESPONSIBLE FOR OBTAINING A GEOTECHNICAL CONSULTANT TO PROVIDE A FIELD INVESTIGATION REPORT DELINEATING RECOMMENDATIONS FOR UNDERCUTTING AND/OR UNDERDRAINS. A COPY OF THIS REPORT SHALL BE FORWARDED TO THE OWNER AND ENGINEER FOR REVIEW AND APPROVAL PRIOR TO UNDERCUTTING OR INSTALLING UNDERDRAIN. UNIT PRICES SHALL BE PROVIDED FOR UNDERDRAIN AND UNDERCUTTING. THE CONTRACTOR SHALL NOT CONSTRUCT BASE COURSE UNTIL THE REPORT IS REVIEWED AND APPROVED BY THE OWNER AND THE ENGINEER.

9. SOIL TESTING RESULTS SHALL BE PROVIDED FOR THE PAVEMENT CONSTRUCTION. TESTING RESULTS SHALL BE SUBMITTED FOR THE SUBGRADE AND BASE COURSE, IN ACCORDANCE WITH THE DESIGN SECTION. A MINIMUM OF 5 TEST LOCATIONS SHALL BE PROVIDED ONSITE. THE TESTING REPORT SHALL DENOTE THE TEST LOCATIONS. THE CONTRACTOR SHALL NOT PROCEED TO THE SUBSEQUENT PAVEMENT SECTION UNTIL TESTING -RESULTS ARE APPROVED FOR PREVIOUS SECTION. ALL TESTING REQUIRED WITHIN THE COUNTY R/W SHALL BE COORDINATED WITH THE COUNTY INSPECTOR. THE CONTRACTOR SHALL BE RESPONSIBLE FOR ALL TESTING COST.

10. LANDSCAPING: FINAL GRADING IN OPEN AREAS AND LANDSCAPE ISLANDS SHALL BE COORDINATED WITH THE LANDSCAPE CONTRACTOR AND THE OWNER. THE CONTRACTOR SHALL ALSO COORDINATE THE PLACEMENT OF ANY IRRIGATION AND ELECTRICAL CONDUIT SLEEVES DURING CONSTRUCTION.

11. ROOF RUNOFF WILL BE DIRECTED TO THE STORMWATER SYSTEM IF A GUTTER COLLECTION SYSTEM IS NOT SHOWN IN THE PLANS. RUNOFF COLLECTION SHALL BE COORDINATED WITH THE ARCHITECT.

12. REMOVAL OF ALL CONSTRUCTION DEBRIS, LIMEROCK, EXCESS OF BUILDERS SAND, CONCRETE AND MORTAR DEBRIS, EXISTING WEEDS AND GRASSES, AND ALL FOREIGN MATERIALS IN THE PLANTING BED AND SOD AREAS IS THE RESPONSIBILITY OF THE SITE WORK CONTRACTOR. SOIL IN AREAS TO BE LANDSCAPED SHALL BE UNCOMPACTED, SUITABLE FOR ROOT GROWTH WITH APPROPRIATE AMOUNTS OF ORGANIC MATTER, AND OF pH 5.5-6.5.

13. TREE BARRICADES MUST REMAIN IN PLACE AND IN THE DIMENSIONS SHOWN ON THE PLAN UNTIL LANDSCAPING BEGINS. SEE NOTE ON SHEET C0.20 AND THE DETAIL ON THE LANDSCAPE PLAN.

No.	Date	Comment

SCALES:
AS SHOWN

eda 40 years
engineers • surveyors • planners
EB 2389
2404 N.W. 43rd ST, GAINESVILLE, FLORIDA 32606-6602
TEL: (352) 373-3541 FAX: (352) 373-7268
www.eda.fl.com mail@eda.fl.com

Project: HOLIDAY INN ALACHUA
CITY OF ALACHUA, FLORIDA

Sheet title: PAVING, GRADING AND DRAINAGE DETAILS AND NOTES

Project phase: CITY OF ALACHUA RESUBMITTAL

Designed: S.J. Date: 12/19/2016 Checked: TAR

Project No.: 2015-283 Drawn:

Professional Engineer of Record: STATE OF FLORIDA PROFESSIONAL ENGINEER Sergio J. Arias, P.E. No. 73311 Certificate No.

Sheet No.: C2.10

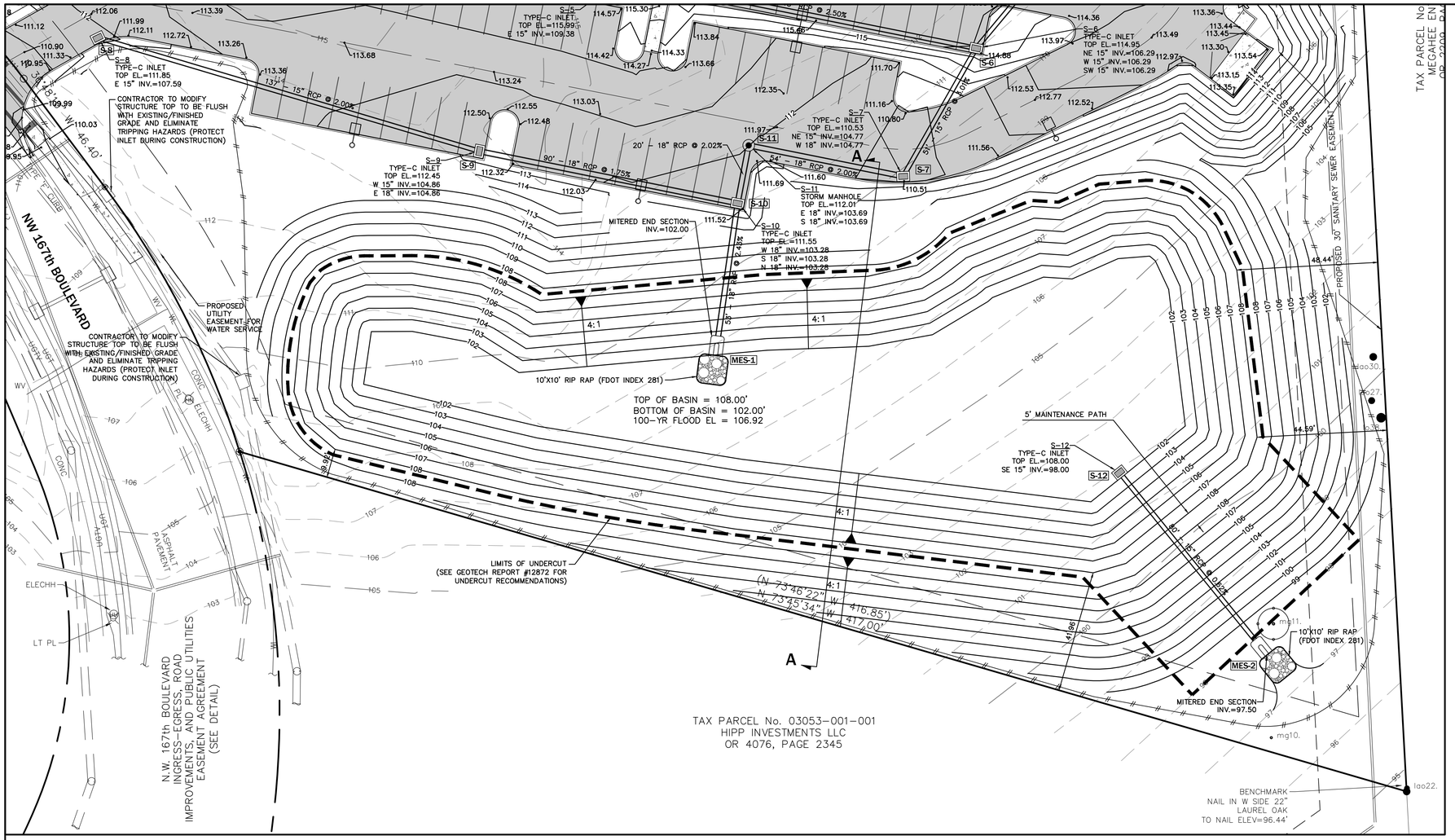

ENGINEER'S CERTIFICATION

1. ENGINEER'S CERTIFICATION:

I HEREBY CERTIFY THAT THE DESIGN OF THE STORMWATER MANAGEMENT SYSTEM FOR THE PROJECT KNOWN AS "HOLIDAY INN ALACHUA" MEETS ALL THE REQUIREMENTS AND HAS BEEN DESIGNED SUBSTANTIALLY IN ACCORDANCE WITH THE ALACHUA COUNTY STORMWATER MANAGEMENT ORDINANCE.

SERGIO REYES, P.E.

MAINTENANCE NOTES

1. MAINTENANCE RESPONSIBILITY:

THE PROPERTY OWNER WILL BE THE ENTITY RESPONSIBLE FOR THE MAINTENANCE OF THE STORMWATER MANAGEMENT SYSTEM.

2. MAINTENANCE PLAN:

A. BASINS SHALL BE MOWED REGULARLY TO AVOID EXCESSIVE VEGETATIVE GROWTH MOWING SCHEDULE SHOULD BE MONTHLY DURING WINTER MONTHS AND MORE FREQUENTLY (BIWEEKLY) DURING SUMMER MONTHS.

B. BASIN SHALL BE CLEANED OUT ANNUALLY OF ANY ACCUMULATED SEDIMENTATION BUILDUP. IF THE BASINS ARE SHOWING EXCESSIVE SEDIMENTATION ACCUMULATION AT THE BASIN BOTTOM, THE BASIN BOTTOM SHALL BE SCRAPED CLEAN MORE OFTEN AS THE CONDITION DICTATES.

C. BASIN SIDE SLOPES SHALL BE MAINTAINED WITH A GOOD STAND OF GRASS. SEASONAL GRASSES SHALL BE PLANTED TO AVOID EROSION (WINTER RYE, SUMMER MILLET).

D. BASINS THAT DO NOT DRAWDOWN PROPERLY AND MAINTAIN STANDING WATER FOR AN EXTENDED PERIOD OF TIME MAY REQUIRE REMEDIAL. THE ENGINEER SHALL BE NOTIFIED TO HELP COORDINATE REMEDIAL ACTION IN THE EVENT THIS OCCURS.

E. THE REQUIRED LANDSCAPING SHALL BE MAINTAINED IN A SOUND CONDITION AT ALL TIMES. ANY DEAD LANDSCAPING MATERIALS SHALL BE REPLACED IMMEDIATELY TO ASSURE PUBLIC SAFETY.

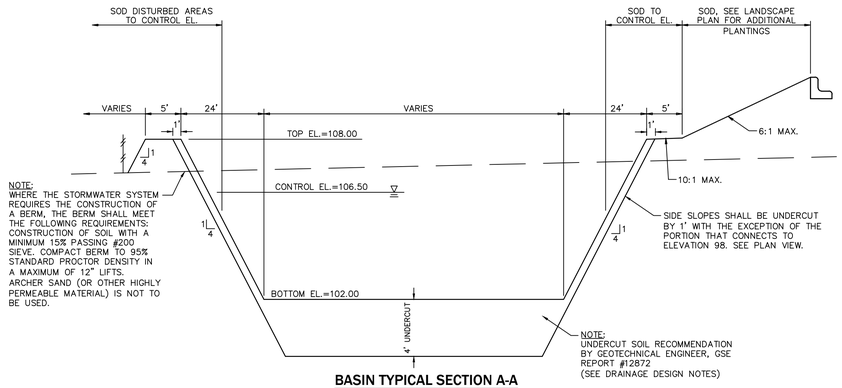

BASIN TYPICAL SECTION A-A

N.T.S.

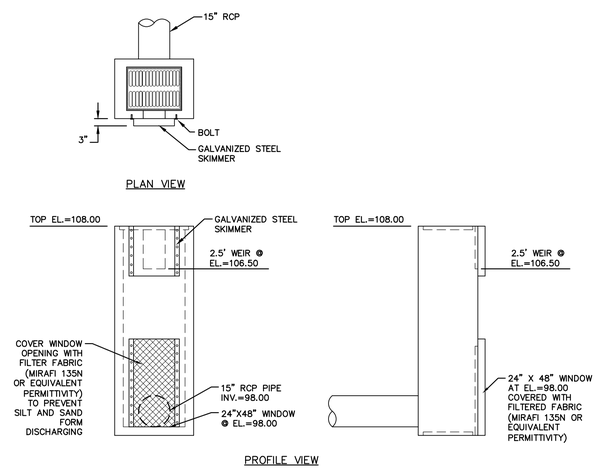

BASIN OUTFALL S-12 DETAIL

N.T.S.

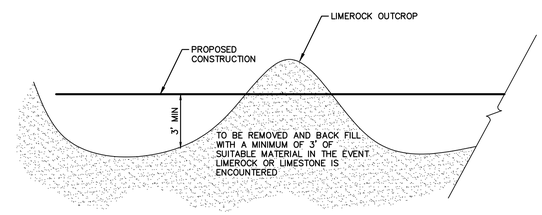

NOTES:

1. IF LIMESTONE OR LIMEROCK OUTCROP IS ENCOUNTERED DURING CONSTRUCTION OF THE BASIN, THE AREA WILL BE OVER-EXCAVATED A MINIMUM OF THREE FEET AND BACKFILLED WITH SUITABLE SOILS TO MEET THE SENSITIVE KARST AREA REQUIREMENTS.

2. IN THE EVENT A SINKHOLE, CAVITIES OR CHIMNEYS DEVELOPS WITHIN THE STORMWATER BASIN, THE FOLLOWING TREATMENT SHALL BE PERFORMED: THE OWNER SHALL NOTIFY SUWANNEE RIVER WATER MANAGEMENT DISTRICT PRIOR TO REMEDIAL ACTION UNLESS POSTPONING THE REPAIR ACTIVITY REPRESENTS AN ENDANGERMENT TO PUBLIC SAFETY. THE SINKHOLE SHALL BE BACKFILLED WITH A SANDY CLAY MIXTURE. THE SANDY CLAY SHALL BE PLACED IN SIX INCH LIFTS WITHIN THE FINAL THREE FEET OF FILL AND ROLLED WITH A HEAVILY LOADED RUBBER TIRE EQUIPMENT. SHOULD SINKHOLE ACTIVITY CONTINUE REPEATEDLY WITHIN A CONFINED AREA, THE OWNER SHALL CONSULT A GEOTECHNICAL ENGINEER TO DETERMINE WHETHER ANY ALTERNATIVE REMEDIAL MEASURES ARE REQUIRED.

LIMEROCK OUTCROP REMOVAL DETAIL

N.T.S.

No.	Date	Comment

NORTH

SCALE: 1"= 20'

0 10 20 40

GRAPHIC SCALE

eda 70 years
engineers • surveyors • planners
EB-2289
2404 NW 43rd ST, GAINESVILLE, FLORIDA 32606-6402
TEL: (352) 373-3541 FAX: (352) 373-7268
www.eda.fl.com mail@eda.fl.com

Project: HOLIDAY INN ALACHUA
CITY OF ALACHUA, FLORIDA

Sheet title: BASIN DETAILS

Project phase: CITY OF ALACHUA RESUBMITTAL

Designed: S.J.R. Checked: TAR

Project No. 16F-288 Date: 12/19/2016

Professional Engineer of Record: STATE OF FLORIDA PROFESSIONAL ENGINEER Sergio J. Reyes, P.E. No. 67311 Engineer Certificate No.

Sheet No.: C2.20

THE STORMWATER POLLUTION PREVENTION PLAN (SWPPP) MAY BE MODIFIED AND UPDATED DURING CONSTRUCTION AS A RESULT OF WEATHER, UNPREDICTABLE EVENTS AND SITE INSPECTIONS.

THIS DOCUMENT WAS PREPARED IN ORDER TO BE IN COMPLIANCE WITH CHAPTER 62-621.300 (4) OF THE FLORIDA ADMINISTRATIVE CODE, WHICH PERTAINS TO THE GENERIC PERMIT FOR STORMWATER DISCHARGE FROM LARGE AND SMALL CONSTRUCTION ACTIVITIES. THE ADMINISTRATIVE CODE GRANTS THE FLORIDA DEPARTMENT OF ENVIRONMENTAL PROTECTION (FDEP) THE AUTHORITY TO REGULATE POINT SOURCE DISCHARGES OF STORM-WATER FROM CONSTRUCTION SITES. THIS DOCUMENT ESTABLISHES A STORMWATER POLLUTION PREVENTION PLAN FOR THE SITE AND IS ORGANIZED TO CORRESPOND TO PART V OF DEP DOCUMENT No. 62-621.300 (4) (A) FDEP FORM 62-261.300 (4) (B) IS TO BE SUBMITTED IN CONJUNCTION WITH THIS DOCUMENT.

I. PROJECT INFORMATION:

PROJECT: HOLIDAY INN ALACHUA
COUNTY: ALACHUA COUNTY FLORIDA
SECTION/TOWNSHIP/RANGE: S 09, T 08 SOUTH, R 18 EAST
COUNTY PARCEL NO.: 03053-001-001
LATITUDE AND LONGITUDE: 29° 41' 19.10"N, 82° 31' 11.61" W
STREET ADDRESS: 16139 NW US HIGHWAY 441
PROJECT AREA: 4.25 ACRES
APPROXIMATE AREA TO BE DISTURBED BY CONSTRUCTION: 4.25 ACRES

II. SITE DESCRIPTION:

1. THE PROPOSED DEVELOPMENT CONSISTS OF THE CONSTRUCTION OF A 92 ROOM HOTEL WITH ASSOCIATED DRAINAGE AND UTILITY IMPROVEMENTS.

   AT THE PREDEVELOPMENT CONDITIONS, THE PROJECT AREA IS DIVIDED INTO TWO DRAINAGE AREAS AS SHOWN IN THE DRAINAGE DESIGN NOTES AND AS DESCRIBED BELOW :

   1.) AREA 1: DRAINS 0.50 ACRES TO AN EXISTING STORMWATER SYSTEM ALONG NW 167TH BLVD.
   2.) AREA 2: DRAINS 2.43 ACRES TO THE SOUTHEAST.

   AT POST-DEVELOPMENT CONDITIONS, THE PROPOSED PROJECT AREA WILL HAVE ONE DRAINAGE AREA AS SHOWN IN THE DRAINAGE DESIGN NOTES AND AS DESCRIBED BELOW:

   1.) AREA 1: WILL DISCHARGE 2.93 ACRES TO THE PROPOSED STORMWATER BASIN, WHICH DISCHARGES TO THE SOUTHEAST AS IN PREDEVELOPMENT CONDITIONS.

2. THE SOIL CONDITIONS WERE INVESTIGATED AND SUMMARIZED IN THE SOILS REPORT PREPARED BY GSE ENGINEERING AND CONSULTING, INC. THE PROPOSED DRAINAGE PLAN WILL CONSIST OF ONE DRAINAGE AREA. AREA 1: 2.93 ACRES OF RUNOFF WILL BE CONVEYED TO BASIN No. 1. IN ORDER TO OBTAIN THE REQUIRED WATER QUALITY TREATMENT, THE BASIN WILL BE UNDERCUT 4 FEET AND BACKFILLED WITH SUITABLE SOIL. THE TREATED WATER VOLUME WILL BE DISCHARGED THROUGH THE OUTFALL STRUCTURE. THE PROPOSED DISCHARGE RATE WILL NOT EXCEED PRE DEVELOPMENT CONDITIONS.

3. EXISTING AND FUTURE DRAINAGE PATTERNS ARE SHOWN IN THE DRAINAGE DESIGN NOTES FOR PRE-DEVELOPMENT CONDITIONS AND POST-DEVELOPMENT CONDITIONS. OUTFALLS, AND STORMWATER BASINS ARE SHOWN IN THE DRAINAGE PLAN AND THE DETAIL PLAN.

4. SEQUENCE OF CONSTRUCTION:

A. PRIOR TO CONSTRUCTION, SILT FENCING AND TREE PROTECTION BARRICADES SHALL BE INSTALLED AND ALL EXISTING DRAINAGE STRUCTURES SHALL BE PROTECTED IN ACCORDANCE WITH THE FDOT FLORIDA EROSION AND SEDIMENTATION CONTROL MANUAL.

B. THE CONSTRUCTION ENTRANCE(S) WILL BE STABILIZED TO MINIMIZE THE CREATION OF DUST AND OFF SITE TRACKING OF SEDIMENTS.

C. THE SITE SHALL BE CLEARED AND GRUBBED OF UNDESIRABLE VEGETATION.

D. THE UNDERGROUND UTILITIES AND STORMWATER PIPING WILL BE INSTALLED AND CONNECTED TO EXISTING STRUCTURES.

E. THE SITE WILL BE ROUGHLY GRADED. IF SUITABLE, THE EXCAVATED MATERIAL MAY BE USED AS FILL FOR ON-SITE GRADING. THE ROADWAYS SHALL BE GRADED. (THE BASIN AREA SHALL BE STABILIZED AS SPECIFIED IN THE PLANS.)

F. ROADWAYS AND PARKING LOTS WILL BE COMPACTED AND A LIMEROCK BASE WILL BE ESTABLISHED FOLLOWED BY AN OVERLAY OF ASPHALTIC CONCRETE. BUILDINGS SHALL BE CONSTRUCTED.

G. UPON SIGNIFICANT COMPLETION OF CONSTRUCTION, THE STORMWATER SYSTEM SHALL BE FLUSHED OUT TO REMOVE ACCUMULATED DEBRIS AND SEDIMENT.

H. ALL DISTURBED AREAS WITHIN THE CONSTRUCTION AREA SHALL BE COMPLETELY GRASSED AND/OR LANDSCAPED. EVIDENCE OF GROWTH MUST BE PRESENT PRIOR TO REMOVAL OF SILT FENCING AND OTHER EROSION CONTROL APPLICATIONS.

III. CONTROLS:

THE CONTROLS SHALL BE IMPLEMENTED AND MAINTAINED DURING THE ENTIRE CONSTRUCTION OF THE PROJECT. IF SITE CONDITIONS ARE SUCH THAT ADDITIONAL CONTROL MEASURES ARE REQUIRED THAN WHAT IS SPECIFIED IN THE EROSION AND SEDIMENTATION CONTROL PLAN, THEN THE CONTRACTOR SHALL IMPLEMENT ADDITIONAL BEST MANAGEMENT PRACTICES NECESSARY.

1. THE CONSTRUCTION ACCESS SHALL BE STABILIZED WITH GRAVEL AND TEMPORARY VEGETATION TO PREVENT SILT LEAVING THE SITE.
2. TREE BARRICADES SHALL BE IMPLEMENTED BEFORE CLEARING AND GRUBBING OF ANY OF THE WORK AREAS.
3. BEFORE CLEARING, SILT FENCES SHALL BE INSTALLED AROUND THE PERIMETER OF THE CONSTRUCTION AND AROUND THE WETLAND(S) AND/OR BASIN(S) AS SHOWN IN THE PLANS. ALL EXISTING STORM DRAINAGE SWALES AND INLETS SHALL BE PROTECTED PER THE FDOT FLORIDA EROSION AND SEDIMENTATION CONTROL MANUAL.
4. AFTER CLEARING BUT BEFORE EXCAVATION AND GRADING, TEMPORARY BERMS AND SWALES SHALL BE CONSTRUCTED AS REQUIRED TO DIVERT THE FLOW INTO THE CORRESPONDING STORMWATER BASIN.
5. DURING CONSTRUCTION OF PAVING AND BUILDINGS, EROSION AND SEDIMENTATION CONTROL MEASURES SHALL BE INSTALLED AS REQUIRED.
6. ALL DISTURBED AREAS WITHIN THE CONSTRUCTION SITE SHALL BE COMPLETELY LANDSCAPED AND/OR GRASSED. FINAL STABILIZATION (INCLUDING SEEDING, MULCHING, SODDING OR RIPRAP) SHALL BE INSTALLED AS REQUIRED. GRASS SEEDING RATES AND MIXTURES SHALL BE PER FDOT INDEX 104. EVIDENCE OF GROWTH MUST BE PRESENT PRIOR TO REMOVAL OF SILT FENCING AND OTHER EROSION CONTROL APPLICATIONS AND PRIOR TO FINAL RELEASE.

IV. EROSION AND SEDIMENTATION CONTROLS:

STABILIZATION PRACTICES

1. ALL ENTRANCES TO THE SITE SHALL BE STABILIZED BEFORE CONSTRUCTION AND FURTHER DISTURBANCE BEGINS. GRAVEL PAD SHALL PROVIDE STABILIZATION AND MINIMIZE THE AMOUNT OF SEDIMENT LEAVING THE SITE. MAINTENANCE OF THE ENTRANCE SHALL INCLUDE SWEEPING OF THE AREA ADJACENT TO THE ENTRANCE. STONE AND GRAVEL MIGHT NEED TO BE PERIODICALLY ADDED TO MAINTAIN THE EFFECTIVENESS OF THE ENTRANCE(S).
2. TREE BARRICADES SHALL BE INSTALLED AROUND THE TREES AS SHOWN IN THE DETAIL PLAN TO PROTECT THE EXISTING VEGETATION.
3. MULCH SHALL BE PLACED IN THE AREAS REQUIRED TO PREVENT EROSION FROM STORMWATER RUNOFF AND THE AREAS SHOWN ON THE PLANS. MULCH SHALL BE ANCHORED TO RESIST WIND DISPLACEMENT AND SHALL BE INSPECTED AFTER EVERY RAINSTORM TO IDENTIFY AREAS WHERE MULCH HAS BEEN WASHED OUT OR LOOSENED. THESE AREAS SHALL HAVE MULCH COVER REPLACEMENT.
4. SEEDING SHALL BE STARTED AFTER GRADING HAS BEEN FINISHED ON THE AREAS SHOWN IN THE PLANS. SEEDED AREAS SHOULD BE INSPECTED FOR FAILURE TO ESTABLISH, AND NECESSARY REPAIRS AND RESEEDING SHOULD BE MADE AS SOON AS POSSIBLE. ADDITIONAL SEEDING AND MULCH MAY BE REQUIRED AS NECESSARY TO PREVENT EROSION DURING OR AFTER CONSTRUCTION HAS FINISHED.
5. SOD SHALL BE INSTALLED IN THE AREAS SHOWN IN THE PLANS. SOD SHALL BE PEGGED IF INSTALLED ON SLOPES GREATER THAN 3:1. SODDED AREAS SHALL BE MAINTAINED AND INSPECTED TO ENSURE SUCCESSFUL ESTABLISHMENT.

SEDIMENTATION PRACTICES

1. SILT FENCES SHALL BE INSTALLED IN THE AREAS SHOWN IN THE PLANS AND AS REQUIRED TO PREVENT SEDIMENT FROM LEAVING THE CONSTRUCTION AREA. SILT FENCES SHALL BE INSPECTED AFTER EACH RAINFALL EVENT TO ENSURE THAT THERE ARE NO GAPS OR TEARS. IF GAPS OR TEARS ARE FOUND THE FABRIC SHOULD BE REPAIRED OR REPLACED. SEDIMENT REMOVAL SHALL BE PART OF THE REGULAR MAINTENANCE. SILT FENCES SHALL REMAIN IN PLACE UNTIL CONSTRUCTION HAS FINISHED AND DISTURBED AREAS ARE PERMANENTLY STABILIZED.
2. DIVERSION SWALES, IF REQUIRED, SHALL BE CONSTRUCTED BEFORE MAJOR LAND DISTURBANCE OF THE RECEIVING BASIN. DIVERSION SWALES SHALL BE STABILIZED AFTER CONSTRUCTION TO MAINTAIN ITS EFFICIENCY.
3. INLETS SHOULD BE TEMPORARILY PROTECTED TO PREVENT SEDIMENT ENTERING THE INLET. BARRIERS WILL CATCH SOIL, DEBRIS AND SEDIMENT AT THE ENTRANCE OF THE INLET.
4. OUTFALL STRUCTURES SHALL HAVE SILT FENCES TO PREVENT SILT FROM ENTERING THE STORMWATER BASINS AND SHALL BE STABILIZED AS REQUIRED TO PREVENT EROSION FROM WASHOUTS.

V. STORMWATER MANAGEMENT:

1. THE PROPOSED PROJECT OBTAINED AN ENVIRONMENTAL RESOURCE PERMIT FROM SUWANNEE RIVER WATER MANAGEMENT DISTRICT (SRWMD) FOR THE CONSTRUCTION AND OPERATION OF A STORMWATER TREATMENT SYSTEM AND CONTROLS. THE PROPOSED SYSTEM (AS SHOWN ON THE PLANS) INCLUDED THE USE OF THE BEST MANAGEMENT PRACTICES (BMP) CONSISTENT WITH THE APPLICABLE REQUIREMENTS OF RULE 40C-42 OF THE DISTRICT. THE OWNER AND/OR THE CONTRACTOR SHALL BE RESPONSIBLE FOR THE OPERATION AND MAINTENANCE OF THE STORMWATER TREATMENT SYSTEM AND CONTROLS UNTIL CONSTRUCTION ACTIVITIES ARE COMPLETED AND FINAL STABILIZATION HAS BEEN ACCOMPLISHED. HOWEVER, THE OWNER SHALL BE RESPONSIBLE FOR THE OPERATION AND MAINTENANCE OF THE STORMWATER SYSTEM IN PERPETUITY, IN ACCORDANCE WITH THE REQUIREMENTS OF THE ENVIRONMENTAL RESOURCE PERMIT.
2. TO TREAT AND CONTROL THE STORMWATER PRODUCED BY THE PROPOSED DEVELOPMENT, THE PROJECT REQUIRES THE INSTALLATION AND CONSTRUCTION OF THE FOLLOWING BMP'S: ONE DRY DETENTION BASIN WHICH MUST BE UNDERCUT FOUR FEET IN ORDER TO PROVIDE THE REQUIRED WATER QUALITY TREATMENT. THE HAS BEEN DESIGNED TO CONTAIN AND ATTENUATE THE STORMS AND DISCHARGE AT PRE-DEVELOPMENT CONDITIONS, WHILE PROVIDING TREATMENT TO THE RUNOFF AS REQUIRED BY THE DISTRICT AND STATE RULES USING THE GUIDELINES CONTAINED IN THE SRWMD HANDBOOK.

VI. CONTROLS FOR OTHER POTENTIAL POLLUTANTS:

1. WASTE DISPOSAL: NO SOLID MATERIALS, INCLUDING CONSTRUCTION MATERIALS, SHALL BE DISCHARGED TO SURFACE WATERS AND ARE NOT AUTHORIZED UNDER THE ISSUED ENVIRONMENTAL RESOURCE PERMIT.
2. THE USE OF GRAVEL AND CONTINUING SWEEPING ACTIVITIES AT THE ENTRANCE OF THE SITE WILL CONTROL THE TRACKING OF SEDIMENT AND DUST LEAVING THE SITE.
3. THE PROPOSED DEVELOPMENT WILL PROVIDE WATER AND SEWER SYSTEM BY CONNECTING INTO THE CENTRAL MUNICIPAL SYSTEM OF GAINESVILLE REGIONAL UTILITIES.
4. ANY APPLICATION OF FERTILIZERS AND PESTICIDES NECESSARY TO ESTABLISH AND MAINTENANCE OF VEGETATION DURING CONSTRUCTION AND THROUGH PERPETUITY MAINTENANCE SHALL FOLLOW THE MANUFACTURERS RECOMMENDATIONS AND THE APPLICABLE RULES OF THE STATE OF FLORIDA.
5. ANY TOXIC MATERIALS REQUIRED DURING CONSTRUCTION SHALL BE PROPERLY STORED, DISPOSED OF AND CONTRACTOR AND/OR OWNER SHALL PROVIDE THE APPROPRIATE PERMITS FROM THE LOCAL OR STATE AGENCIES.

VII. APPROVED STATE OR LOCAL PLANS:

1. ALL THE SEDIMENT AND EROSION CONTROLS THAT ARE LISTED IN THE SITE PLAN AS APPROVED BY THE SJRWMD ARE INCLUDED IN THIS STORMWATER POLLUTION PREVENTION PLAN (SEE ITEM III AND IV).
2. THIS STORMWATER POLLUTION PREVENTION PLAN SHALL BE AMENDED IF REQUIRED BY ANY LOCAL OR STATE AGENCY OR AS REQUIRED BY UNFORESEEABLE CONDITIONS AND THE OWNER SHALL SUBMIT A RE-CERTIFICATION TO THE NPDES STATE OFFICE THAT THE PLAN HAS BEEN AMENDED TO ADDRESS THOSE CHANGES.

VIII. MAINTENANCE:

THE CONTRACTOR IS RESPONSIBLE FOR THE MAINTENANCE, INSPECTION SCHEDULE, AND REPAIRS OUTLINED IN THIS PLAN. MAINTENANCE SHALL CONTINUE THROUGHOUT THE PROJECT UNTIL WORK IS COMPLETE. THE CONTRACTOR IS RESPONSIBLE FOR REMOVING ALL TEMPORARY EROSION AND SEDIMENT CONTROL DEVICES AFTER CONSTRUCTION IS COMPLETE.

IN ADDITION TO THE ITEMS MENTIONED IN THE PREVIOUS SECTIONS, THE CONTRACTOR SHALL INITIATE ANY REPAIRS WITHIN 24 HOURS OF BEING REPORTED. IN THE EVENT THAT THE BASINS DO NOT PERFORM PROPERLY OR IF A SINKHOLE DEVELOPS, THE PROJECT ENGINEER SHALL BE NOTIFIED TO ASSIST IN COORDINATING REMEDIAL ACTION.

1. MAINTENANCE WOULD BE DIVIDED IN ROUTINE MAINTENANCE AND REPAIR MAINTENANCE. ALL STORMWATER BMP'S SHOULD BE INSPECTED FOR CONTINUED EFFECTIVENESS AND STRUCTURAL INTEGRITY ON A REGULAR BASIS. THE SYSTEMS SHOULD BE CHECKED AFTER EACH STORM EVENT IN ADDITION TO REGULARLY SCHEDULED INSPECTIONS.
2. ROUTINE MAINTENANCE REQUIREMENTS SHOULD BE INCLUDED IN THE INSPECTOR CHECKLIST TO AID THE INSPECTOR IN DETERMINING WHETHER A BMP'S MAINTENANCE IS ADEQUATE OR NEEDS A REVISION. INSPECTORS SHALL KEEP RECORD OF MAINTENANCE, ROUTINE OR REPAIR, TO PROVIDE EVIDENCE OF AN EFFICIENT INSPECTION AND MAINTENANCE.
3. SIDE ENTRANCES: MAINTENANCE SHALL INCLUDE REPLACEMENT OF GRAVEL AND CLEANING THE SOIL THAT IS TRACKED OFFSITE FOR PROPER DISPOSAL.
4. TREE BARRICADES: MAINTENANCE SHALL INCLUDE INSPECTION OF MESH AND POSTS AND REPAIR OR REPLACEMENT OF DAMAGED VEGETATION.
5. SILT FENCES: MAINTENANCE SHALL INCLUDE SEDIMENT REMOVAL AND INSPECTION TO ENSURE PROPER ANCHORING AND THAT NO TEARING OR GAPS HAVE OCCURRED. ACCUMULATED SEDIMENT SHALL BE REMOVED WHEN IT HAS REACHED ONE-THIRD THE HEIGHT OF SILT FENCE.
6. DIVERSION SWALES: MAINTENANCE SHALL INCLUDE INSPECTION AFTER EVERY RAINFALL EVENT AND ONCE EVERY TWO WEEKS BEFORE FINAL STABILIZATION. THEY SHOULD BE CLEARED OF SEDIMENT AND MAINTAIN VEGETATIVE COVER.
7. TEMPORARY BERMS: MAINTENANCE SHALL INCLUDE REMOVAL OF DEBRIS, TRASH SEDIMENT AND LEAVES. SIDES OF THE BERM SHALL BE INSPECTED FOR EROSION AFTER EACH STORM EVENT.
8. MULCHING: ROUTINE MAINTENANCE SHALL INCLUDE REPLACEMENT PERIODICALLY.
9. SEEDING: ROUTINE MAINTENANCE SHALL INCLUDE RESEEDING OF AREAS THAT FAILED TO ESTABLISH.
10. SODDING: ROUTINE MAINTENANCE SHALL INCLUDE WATERING AND MOWING. REPLACEMENT OF GRASS MAY BE NECESSARY IF COVER IS NOT FULLY ESTABLISHED.
11. INLETS: ROUTINE MAINTENANCE SHALL INCLUDE INSPECTION AFTER EVERY STORM EVENT AND MIGHT INCLUDE REMOVAL OF ACCUMULATED SEDIMENT.
12. OUTFALL STRUCTURES: ROUTINE MAINTENANCE SHALL INCLUDE INSPECTION AFTER EVERY STORM EVENT TO ASSURE NO EROSION OR SCOUR HAS OCCURRED.

IX. INSPECTIONS:

1. THE OWNER AND /OR CONTRACTOR SHALL PROVIDE QUALIFIED PERSONNEL TO INSPECT ALL POINTS OF POTENTIAL DISCHARGE FROM THE PROJECT SITE FOR DISTURBED AREAS, THE EROSION AND SEDIMENTATION CONTROLS AND BMP'S AS LISTED IN THIS PLAN. THE INSPECTION SHALL BE PERFORMED DURING CONSTRUCTION AND BEFORE FINAL STABILIZATION, ONCE EVERY SEVEN-CALENDAR DAYS AND WITHIN 24 HOURS OF THE END OF A STORM THAT IS GREATER THAN 0.50 INCHES. AFTER FINAL STABILIZATION AND BEFORE FINISH OF CONSTRUCTION THE INSPECTION SHALL BE CONDUCTED ONCE EVERY MONTH.
2. THE CONTRACTOR SHALL INSTALL A RAIN GAUGE AT THE SITE TO MONITOR AND DOCUMENT RAINFALL EVENTS IN EXCESS OF 0.50 INCHES.
3. ALL DISTURBED AREAS AND AREAS USED FOR MATERIALS STORAGE SHALL BE INSPECTED FOR POLLUTANTS ENTERING THE STORMWATER SYSTEM. THE STORMWATER MANAGEMENT SYSTEM AND EROSION AND SEDIMENT CONTROL MEASURES IDENTIFIED IN THE PLAN SHALL BE INSPECTED TO ENSURE THEY ARE OPERATING CORRECTLY. LOCATIONS WHERE VEHICLES ENTER AND LEAVE THE SITE SHALL BE INSPECTED FOR EVIDENCE OF OFFSITE SEDIMENT TRACKING.
4. REPAIR OR MAINTENANCE NEEDED TO ASSURE PROPER OPERATION OF THE STORMWATER POLLUTION PREVENTION PLAN SHALL BE DONE IN A TIMELY MANNER BUT NO LATER THAN 7 CALENDAR DAYS FOLLOWING THE INSPECTION.
5. A REPORT SHALL BE KEPT OF EACH INSPECTION FOR THREE YEARS AFTER FINAL STABILIZATION AND SHALL INCLUDE THE DATES OF EACH INSPECTION, THE SCOPE OF THE INSPECTION, MAJOR OBSERVATIONS, ANY REPAIR AND/OR MAINTENANCE REQUIRED AND ANY INCIDENT OF NON-COMPLIANCE. IF THE REPORT DOES NOT CONTAIN ANY INCIDENTS OF NON-COMPLIANCE, THE REPORT SHALL CONTAIN A CERTIFICATION THAT THE FACILITY HAS BEEN IN COMPLIANCE WITH THE STORMWATER POLLUTION PREVENTION PLAN AND THE NPDES PERMIT. THE REPORT SHALL INCLUDE THE NAME AND QUALIFICATIONS OF THE INSPECTOR AND SHALL BE SIGNED IN ACCORDANCE TO FDEP RULE 62-621.300, PART VII.C. A COPY OF THE CONSTRUCTION INSPECTION FORM IS INCLUDED ON THIS STORMWATER POLLUTION PREVENTION PLAN SHEET. A COPY SHALL BE RETAINED AT THE CONSTRUCTION SITE FROM THE DATE OF PROJECT INITIATION TO THE DATE OF FINAL STABILIZATION.

X. NON-STORMWATER DISCHARGES:

1. THE FOLLOWING NON-STORMWATER DISCHARGES MIGHT BE COMBINED WITH STORMWATER AND WOULD BE AUTHORIZED AS PART OF THIS PERMIT: FIRE HYDRANT FLUSHING, CONTROL OF DUST, POTABLE WATER FLUSHING AND IRRIGATION DRAINAGE. BECAUSE OF THE NATURE OF THESE DISCHARGES, THE EROSION, STABILIZATION AND TREATMENT SYSTEMS TO BE IMPLEMENTED, AS PART OF THIS PLAN WOULD BE APPROPRIATE TO PREVENT AND TREAT ANY POLLUTION RELATED TO THESE NON-STORMWATER DISCHARGES.
2. DISCHARGES FROM DEWATERING ACTIVITIES ASSOCIATED WITH SITE CONSTRUCTION ARE NOT AUTHORIZED AND REQUIRED CONSTRUCTION OF TEMPORARY SEDIMENTATION BASINS AND USE OF APPROPRIATE FLOCCULATING AGENTS TO ENHANCE PARTICLE SEGREGATION AND SPEED UP SETTLING OF PARTICLES.

XI. CONTRACTORS:

1. ALL CONTRACTORS AND/OR SUBCONTRACTORS RESPONSIBLE FOR IMPLEMENTING THE PLAN SHALL SIGN THE CERTIFICATION STATEMENT BEFORE STARTING CONSTRUCTION ACTIVITIES OF THE PROJECT. THE CERTIFICATION MUST INCLUDE THE NAME AND TITLE OF THE PERSON PROVIDING THE SIGNATURE, THE NAME, ADDRESS AND TELEPHONE NUMBER OF THE CONTRACTING FIRM, THE ADDRESS OF THE SITE AND THE DATE THE CERTIFICATION IS MADE. THE OWNER SHALL KEEP THESE CERTIFICATIONS AS PART OF THIS POLLUTION PLAN. MULTIPLE COPIES OF THE CERTIFICATION STATEMENT MAY BE NECESSARY DEPENDING UPON THE NUMBER OF SUBCONTRACTORS ASSOCIATED WITH THE PROJECT.

CERTIFICATION STATEMENT

"I CERTIFY UNDER PENALTY OF LAW THAT I UNDERSTAND AND SHALL COMPLY WITH THE TERMS AND CONDITIONS OF THE STATE OF FLORIDA GENERIC PERMIT FOR STORMWATER DISCHARGE FROM LARGE AND SMALL CONSTRUCTION ACTIVITIES AND THIS STORMWATER POLLUTION PREVENTION PLAN PREPARED THEREUNDER."

CONTRACTING FIRM: _____

ADDRESS: _____

CITY, STATE, ZIP CODE: _____

TELEPHONE: _____

FAX: _____

PROJECT NAME: HOLIDAY INN ALACHUA

PROJECT ADDRESS: 16139 NW US HIGHWAY 441

CITY, STATE, ZIP CODE: CITY OF ALACHUA, FLORIDA,

NAME: _____ SIGNATURE: _____

DATE: _____

STORMWATER POLLUTION PREVENTION PLAN INSPECTION REPORT FORM

Inspections must occur at least once a week and within 24 hours of the end of a storm event that is 0.50 inches or greater.

PROJECT NAME: HOLIDAY INN ALACHUA FDEP NPDES STORMWATER IDENTIFICATION NO.: FLR10 _____

OWNER: MPH HOTELS CONTRACTOR: _____

CONSTRUCTION MANAGER: _____

Date of Inspection	Location	Rain data	Type of control (see below)	Date installed / modified	Current Condition (see below)	Observations or Corrective Action / Other Remarks	Inspected By

CONDITION CODE: G = Good; C = Needs to be cleaned; M = Marginal, needs maintenance or replacement soon; P = Poor, needs immediate maintenance or replacement; O = Other

CONTROL TYPE CODES

1. Silt Fence	10. Storm drain inlet protection	19. Reinforced soil retaining system	28. Tree protection
2. Earth dikes	11. Vegetative buffer strip	20. Gabion	29. Detention pond
3. Structural diversion	12. Vegetative preservation area	21. Sediment Basin	30. Retention pond
4. Swale	13. Retention Pond	22. Temporary seed / sod	31. Waste disposal / housekeeping
5. Sediment Trap	14. Construction entrance stabilization	23. Permanent seed / sod	32. Dam
6. Check dam	15. Perimeter ditch	24. Mulch	33. Sand Bag
7. Subsurface drain	16. Curb and gutter	25. Hay Bales	34. Other
8. Pipe slope drain	17. Paved road surface	26. Geotextile	
9. Level spreaders	18. Rock outlet protection	27. Rip-rap	

INSPECTOR INFORMATION:

_____ _____ _____

Name Qualification Date

The above signature also shall certify that this facility is in compliance with the Stormwater Pollution Prevention Plan and the State of Florida Generic Permit for Stormwater Discharge from Large and Small Construction Activities if there are not any incidents of non compliance identified above.

* * * * * *

"I certify under penalty of law that this document and all attachments were prepared under my direction or supervision in accordance with a system designed to assure that qualified personnel properly gathered and evaluated the information submitted. Based on my inquiry of the person or persons who manage the system or those persons directly responsible for gathering the information, the information submitted is, to the best of my knowledge and belief, true, accurate and complete. I am aware that there are significant penalties for submitting false information, including the possibility of fine and imprisonment for knowing violations.

No.	Date	Comment

SCALES: AS SHOWN

eda 40 years
engineers • surveyors • planners
EB 2189
2404 N.W. 43rd ST. GAINESVILLE, FLORIDA 32606-6604
TEL: (352) 373-3541 FAX: (352) 373-7249
www.eda8.com mail@eda8.com

Project: HOLIDAY INN ALACHUA
CITY OF ALACHUA, FLORIDA

Sheet title: STORMWATER POLLUTION PREVENTION PLAN

Project phase: CITY OF ALACHUA RESUBMITTAL

Designer: S. Bryan J. Mar Checked: TAR

Project No. 2016-262 Date: 12/19/2016

Professional Engineer of Record: STATE OF FLORIDA PROFESSIONAL ENGINEER Sergio I. Mar, P.E. No. 73311

Indicate No.

Sheet No.: C3.00

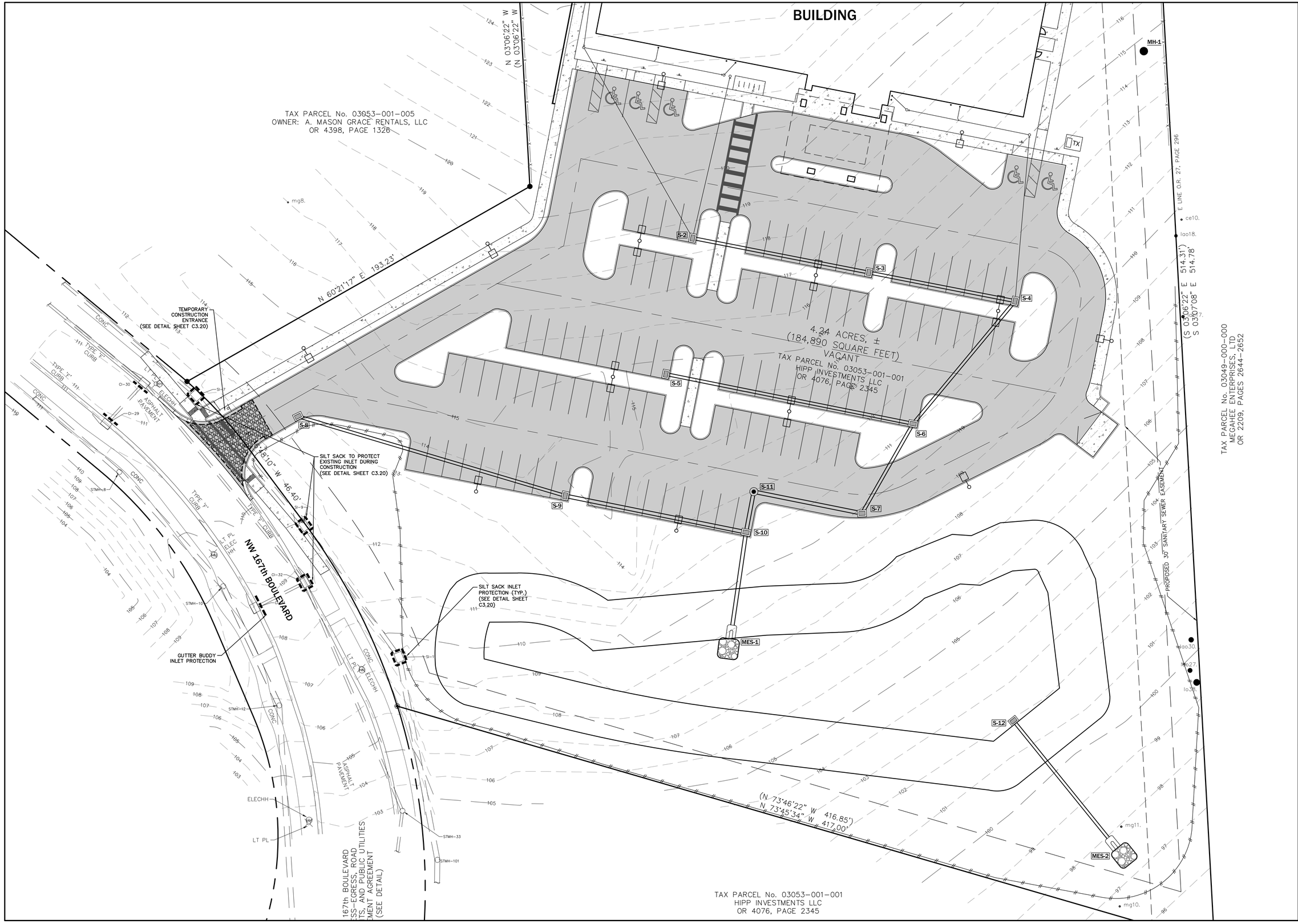

NORTH
SCALE: 1"= 20'
0 10 20 40
GRAPHIC SCALE

No.	Date	Comment

eda 40 years
engineers • surveyors • planners
EB 2389
2404 N.W. 43rd ST. GAINESVILLE, FLORIDA 32606-6602
TEL: (352) 373-3541 FAX: (352) 373-7724
www.edaFL.com mail@edaFL.com

Project:
HOLIDAY INN ALACHUA
CITY OF ALACHUA, FLORIDA

Sheet title:
EROSION AND SEDIMENTATION CONTROL PLAN

Project phase:
CITY OF ALACHUA RESUBMITTAL

Designed: S.W.G. Drawn: J.MARK Checked: TAR
Project No. 2016-236 Date: 12/19/2016

Professional Engineer of Record:
STATE OF FLORIDA
PROFESSIONAL ENGINEER
Sergio I. Rodriguez, P.E. No. 47311
Engineer Certificate No.

Sheet No.:
C3.10

\\server3\engprojects\Holiday Inn - Alachua\Plans\Current DWG\H16233\1.dwg, C3.10 - EROSION, 12/19/2016 3:11:58 PM, TAR

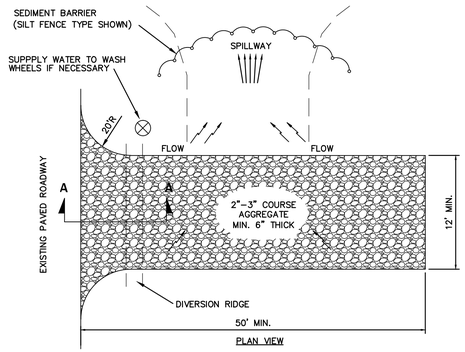

PLAN VIEW

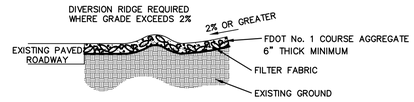

SECTION A-A

NOTE:

1. THE ENTRANCE SHALL BE MAINTAINED IN A CONDITION THAT WILL PREVENT TRACKING OR FLOWING OF SEDIMENT ONTO PUBLIC RIGHTS-OF-WAY. THIS MAY REQUIRE TOP DRESSING, REPAIR AND/OR CLEANOUT OF ANY MEASURES USED TO TRAP SEDIMENT.
2. WHEN NECESSARY, WHEELS SHALL BE CLEANED PRIOR TO ENTRANCE ONTO PUBLIC RIGHT-OF-WAY.
3. WHEN WASHING IS REQUIRED, IT SHALL BE DONE ON AN AREA STABILIZED WITH CRUSHED STONE THAT DRAINS INTO AN APPROVED SEDIMENT TRAP OR SEDIMENT BASIN.
4. USE SANDBAGS STRAW BALES OR OTHER APPROVED METHODS TO CHANNELIZE RUNOFF TO BASIN AS REQUIRED.

TYPICAL GRAVEL CONSTRUCTION ENTRANCE

N.T.S.

EROSION & SEDIMENTATION CONTROL NOTES

1. TEMPORARY SEEDING WILL TAKE PLACE IN ALL FILL AREAS
2. INSTALLATION OF EROSION CONTROL SHALL BE IN ACCORDANCE WITH DETAILS AND STORMWATER POLLUTION PREVENTION PLAN (SWPPP).
3. STOCK PILING AND/OR STORAGE OF MATERIAL DURING CONSTRUCTION SHALL NOT IMPEDE STORMWATER FLOW AND SHALL NOT CAUSE EROSION.
4. AREAS USED FOR CONSTRUCTION SHALL BE STABILIZED AFTER REMOVAL AS REQUIRED PER SWPPP.
5. SILT FENCING AND/OR STAKED HAYBALES SHALL BE CONSTRUCTED WHERE SHOWN ON THE DRAWINGS PRIOR TO STARTING CONSTRUCTION.
6. THE STORMDRAIN SYSTEM SHALL BE FLUSHED OUT TO REMOVE ALL ACCUMULATED DEBRIS AND SEDIMENT UPON COMPLETION OF CONSTRUCTION.
7. THE DRAINAGE BASIN BOTTOM SHALL BE SCRAPED CLEAN OF ALL ACCUMULATED SEDIMENT UPON COMPLETION OF CONSTRUCTION AFTER THE STORMDRAIN SYSTEM IS COMPLETELY FLUSHED OUT.
8. ALL DISTURBED AREAS IN THE CONSTRUCTION AREA SHALL BE COMPLETELY GRASSED BY COMPLETION OF CONSTRUCTION. EVIDENCE OF GROWTH MUST BE PRESENT PRIOR TO FINAL RELEASE. SEASONAL GRASSES (I.E. WINTER RYE, SUMMER MILLET) SHALL BE USED IS NECESSARY.

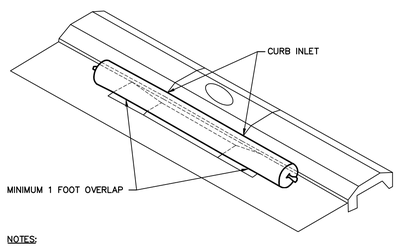

NOTES:

1. INSTALL THE GUTTERBUDDY IN FRONT OF THE CURB INLET OPENING. EACH END OF THE GUTTERBUDDY SHOULD OVERLAP THE CURB INLET APPROXIMATELY 12'.
2. THE GUTTERBUDDY SHOULD BE CLEANED IF A VISUAL INSPECTION SHOWS SILT AND DEBRIS BUILD UP AROUND THE GUTTERBUDDY.
3. PONDING IS LIKELY IF SEDIMENT IS NOT REMOVED REGULARLY. INSPECTION OF THE GUTTERBUDDY SHOULD BE ON A REGULAR BASIS AND IMMEDIATELY AFTER MAJOR RAIN EVENTS.

GUTTERBUDDY TYPICAL DETAIL

N.T.S.

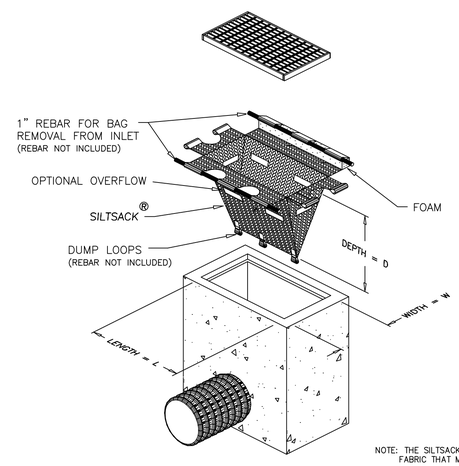

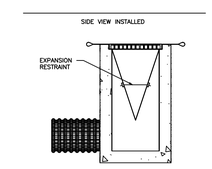

INSTALLATION DETAIL

REGULAR FLOW SILTSACK®

(FOR AREAS OF LOW TO MODERATE PRECIPITATION AND RUN-OFF)

PROPERTIES	TEST METHOD	UNITS
GRAB TENSILE STRENGTH	ASTM D-4632	300 LBS
GRAB TENSILE ELONGATION	ASTM D-4632	20 %
PUNCTURE	ASTM D-4833	120 LBS
MULLEN BURST	ASTM D-3786	800 PSI
TRAPEZOID TEAR	ASTM D-4533	120 LBS
UV RESISTANCE	ASTM D-4355	80 %
APPARENT OPENING SIZE	ASTM D-4751	40 US SIEVE
FLOW RATE	ASTM D-4491	40 GAL/MIN/SQ FT
PERMITTIVITY	ASTM D-4491	0.55 SEC -1

SILTSACK®

SPECIFICATIONS

NOTE: THE SILTSACK® WILL BE MANUFACTURED FROM A WOVEN POLYPROPYLENE FABRIC THAT MEETS OR EXCEEDS THE FOLLOWING SPECIFICATIONS.

DETAIL OF INLET SEDIMENT CONTROL DEVICE WITH CURB DEFLECTOR

N.T.S.

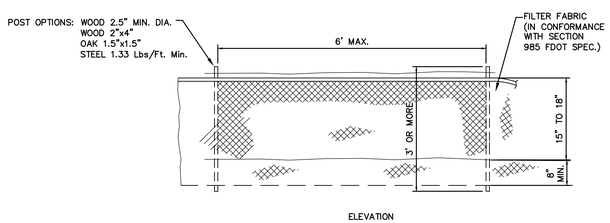

ELEVATION

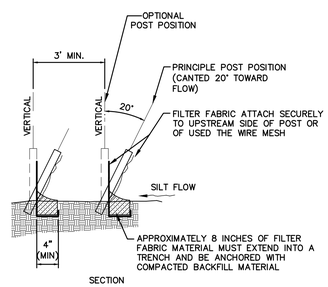

SECTION

TYPE III SILT FENCE DETAIL

N.T.S.

No.	Date	Comment

SCALES:
AS SHOWN

eda 40 years
engineers • surveyors • planners
EB 2389
2404 N.W. 43rd ST. GAINESVILLE, FLORIDA 32606-6602
TEL: (352) 373-3541 FAX: (352) 373-7724
www.eda.fl.com mail@eda.fl.com

Project: HOLIDAY INN ALACHUA
CITY OF ALACHUA, FLORIDA

Sheet title: EROSION DETAILS AND NOTES

Project phase: CITY OF ALACHUA RESUBMITTAL

Designed: S.B. Drawn: J.L. Checked: TAR

Project No. 1-2-243 Date: 12/19/2016

Professional Engineer of Record:
STATE OF FLORIDA
PROFESSIONAL ENGINEER
Sergio I. Rodriguez, P.E.
Engineer License No. 47311

Sheet No.:
C3.20

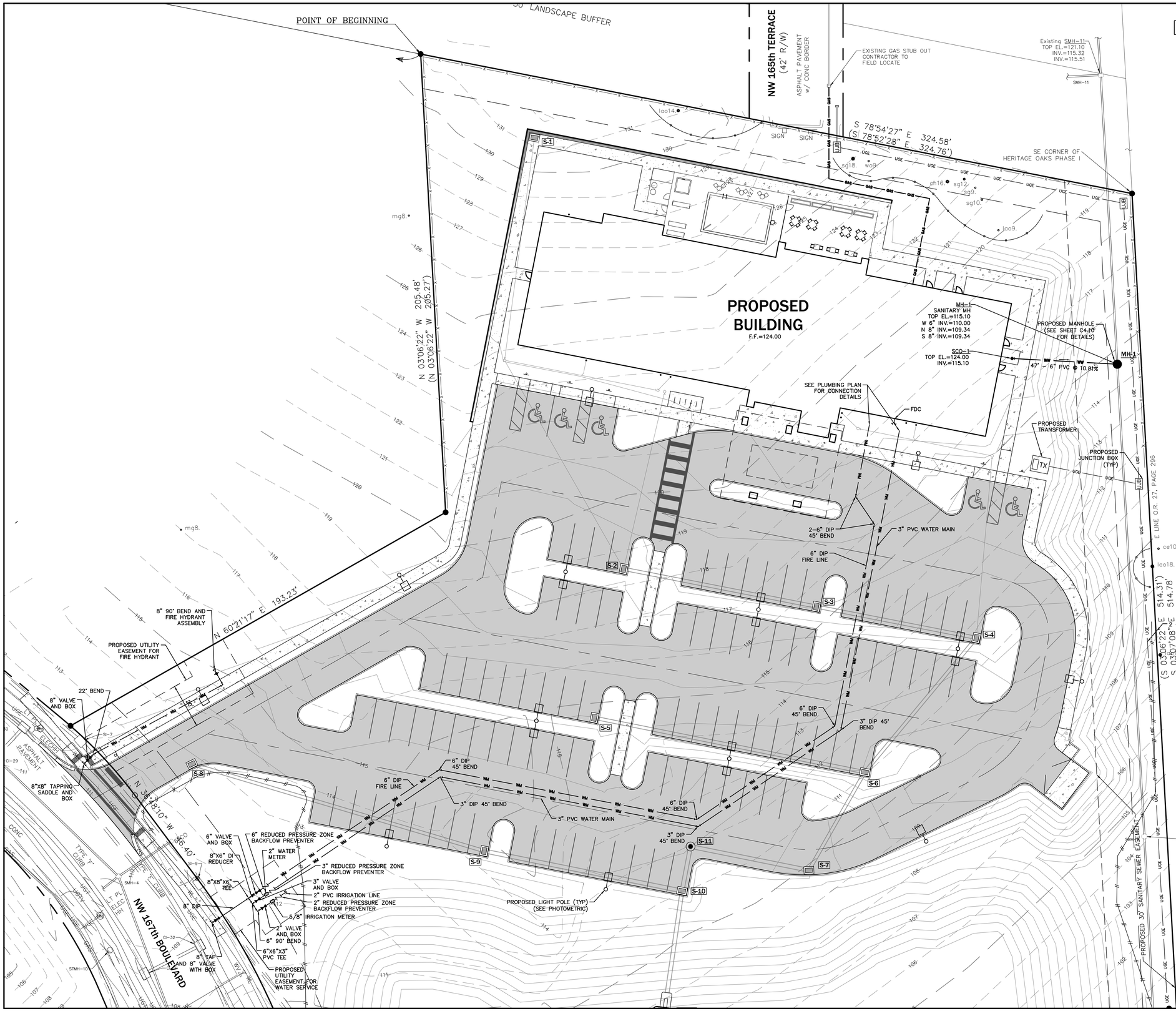

UTILITY NOTES

1. THE UTILITY PLAN AND PLAT SHOWS ALL PUBLIC UTILITY EASEMENTS (PEU'S) IN A METES AND BOUNDS FORMAT. UPON CITY OF ALACHUA PUBLIC SERVICES APPROVAL OF PLANS FOR DEVELOPMENTS NOT BEING PLATTED, OWNER MAY CHOOSE TO GRANT THE METES AND BOUNDS EASEMENTS AS SHOWN, OR GRANT A BLANKET EASEMENT OVER THE ENTIRE PROPERTY, PROVIDED FACILITIES ARE INSTALLED WITHIN THE PRESCRIBED DISTANCES AS SHOWN ON THE UTILITY PLANS AND IN ACCORDANCE WITH THE UTILITY SEPARATION REQUIREMENTS FOR THE CITY OF ALACHUA.
2. ALL CONSTRUCTION MATERIALS AND METHODS FOR POTABLE WATER, WASTEWATER AND RECLAIMED WATER SYSTEMS SHALL CONFORM TO THE CITY OF ALACHUA'S MOST RECENT POTABLE WATER, WASTEWATER, AND RECLAIMED WATER SYSTEM DESIGN STANDARDS AND APPROVED MATERIALS MANUAL.
3. POTABLE WATER AND WASTEWATER MAINS SHALL MAINTAIN A MINIMUM 10 FEET HORIZONTAL AND 1.5 FOOT VERTICAL SEPARATION.
4. A MINIMUM HORIZONTAL SEPARATION OF 10 FEET FOR POTABLE WATER MAINS, WASTEWATER FORCE MAINS, AND RECLAIMED WATER MAINS, AND 15 FEET FOR GRAVITY WASTEWATER MAINS SHALL BE PROVIDED AND MAINTAINED FROM BUILDINGS, TRANSFORMERS AND ALL PERMANENT STRUCTURES. SERVICE LATERALS REQUIRE 5 FEET LESS CLEARANCE FOR EACH OF THE UTILITIES; NOTE THAT WATER SERVICE LATERALS SHALL BE INSTALLED WITHIN 4" SLEEVES.
5. POTABLE WATER SERVICES, REQUIRING A SEPARATE WATER METER, SHALL BE PROVIDED TO EACH LOT, BUILDING OR PARCEL. EFFECTIVE OCTOBER 1, 2007, FOR COMMERCIAL, MULTIFAMILY, AND INSTITUTIONAL DEVELOPMENTS, THE DEVELOPER SHALL BE RESPONSIBLE FOR INSTALLING POTABLE WATER SERVICES AND YOKE ASSEMBLY PACKAGE UP TO AND INCLUDING THE METER YOKE, BOX (INSTALLED AT FINAL GRADE) AND ASSOCIATED APPURTENANCES, FOR METERS 1" AND SMALLER (SEE CITY OF ALACHUA W/WW/RCW CONSTRUCTION DETAIL W-8.0), WITH A ONE-YEAR WARRANTY.
6. ALL 2" VALVES LOCATED IN PAVED AREAS, INCLUDING SIDEWALKS, SHALL BE CAST IRON, RESILIENT SEAT GATE VALVES WITH STANDARD 2" OPERATING NUT, THREADED WITH GALVANIZED NIPPLE BETWEEN THE VALVES AND TAPPING SADDLE OR TAPPED TEE.
7. WATER MAINS 4" IN DIAMETER AND GREATER, PLACED UNDER ROADWAYS, SHALL BE CEMENT LINED DUCTILE IRON PIPE (CLDIP) EXTENDING 5 FEET PAST THE BACK OF CURB TRACER WIRE INSTALLED ON PVC WATER MAINS SHALL CONTINUE ACROSS THE CLDIP SECTIONS.
8. 1" OR 2" WATER SERVICE CROSSINGS LOCATED UNDER ROADWAYS SHALL BE ENCASED IN 4" SCH 40 PVC EXTENDING 5' PAST THE BACK OF CURB.
9. ANCHORING TEES, COUPLINGS, AND BENDS SHALL BE USED ON ALL FIRE HYDRANT ASSEMBLIES.
10. ALL PRESSURIZED MAIN FITTINGS SHALL BE MECHANICAL JOINT WITH RESTRAINED JOINT GLANDS; A SUFFICIENT LENGTH OF THE PIPE CONNECTED TO THE FITTINGS SHALL BE MECHANICALLY RESTRAINED TO PROVIDE REACTION. CALCULATIONS FOR REQUIRED RESTRAINT LENGTH MUST BE PROVIDED IF THE SPECIFIED RESTRAINT LENGTH, DUE TO SOIL TYPE OR DEPTH OF COVER, DIFFERS FROM THOSE PROVIDED ON THESE DETAILS.
11. ALL SANITARY WASTEWATER SERVICE LATERALS SHALL BE MIN. 4" DIAMETER PVC (SDR 35) AT 1.00% MIN. SLOPE UNLESS OTHERWISE LABELED.
12. WASTEWATER CLEANOUT COVERS LOCATED WITHIN PAVEMENT AND SIDEWALKS ADJACENT TO PAVED AREAS SHALL BE RATED FOR TRAFFIC LOAD BEARING. WASTEWATER CLEANOUT COVERS IN OTHER SIDEWALKS/WALKWAYS SHALL BE BRASS WITH A SQUARE RECESS.
13. MANHOLES WHICH ARE NOT INSTALLED UNDER PAVEMENT SHALL HAVE A RIM ELEVATION AT LEAST 6" ABOVE FINISHED GRADE, AND A 10:1 SLOPE TO FINISHED GRADE.
14. UNLESS OTHERWISE NOTED ON THE PLANS, THE FINISHED FLOOR ELEVATIONS OF BUILDINGS SHALL BE A MINIMUM OF 6" ABOVE THE LOWEST UPSTREAM MANHOLE TOP. IF THIS IS INFEASIBLE, A WASTEWATER SERVICE LATERAL BACKWATER VALVE (BWV) IS REQUIRED ON THE CUSTOMER SIDE OF CLEANOUT.
15. WHEN A POTABLE OR RECLAIMED WATER MAIN, OR A WASTEWATER FORCE MAIN IS ROUTED WITHIN 10 FT. OF AN ELECTRIC TRANSFORMER, A 20 FT. LENGTH OF DIP SHALL BE CENTERED ON THE TRANSFORMER WITH MECHANICAL RESTRAINT AT EACH END. NO FITTINGS OR VALVES SHALL OCCUR WITHIN 10 FT. OF THE NEAREST EDGE OF THE TRANSFORMER. A MINIMUM CLEARANCE OF 3' SHALL BE MAINTAINED BETWEEN THE MAIN AND THE TRANSFORMER.
16. A/C CONDENSATE SHALL NOT FLOW INTO WASTEWATER SYSTEM.
17. ALL NON FERROUS PIPE 2" DIA. AND LARGER METER BOXES AND/OR VALVE BODY BOXES SHALL HAVE 10 GAUGE SOLID CORE TRACER WIRE.

No.	Date	Comment

NORTH

SCALE: 1"= 20'

0 10 20 40

GRAPHIC SCALE

eda 70 years
engineers • surveyors • planners
EB 2289
2404 N.W. 43rd ST. GAINESVILLE, FLORIDA 32606-6672
TEL: (352)373-3541 FAX: (352)373-7545
www.eda.fl.com mail@eda.fl.com

Project: HOLIDAY INN ALACHUA
CITY OF ALACHUA, FLORIDA

Sheet title: UTILITY PLAN

Project phase: CITY OF ALACHUA RESUBMITTAL

Designed: S.J.P. Drawn: J.M.B. Checked: TAR

Project No. 16-0232 Date: 12/19/2016

Professional Engineer of Record: STATE OF FLORIDA PROFESSIONAL ENGINEER Sergio J. Pinto, P.E. Engineer Cert. No. 73311

Sheet No.: C4.00

\\server3\engprojects\Holiday Inn - Alachua\Plans\Current DWG\H16231L.dwg, C4.00 - UTIL, 12/19/2016 3:12:08 PM, TAR

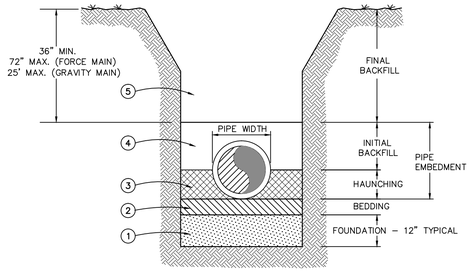

NOTES:

1. A FOUNDATION MAY BE REQUIRED IN VERY POOR SOIL CONDITIONS. FIELD DETERMINATION WILL BE PROVIDED BY GRU INSPECTOR. TYPICAL FOUNDATION THICKNESS SHALL BE 12", BUT MAY VARY ACCORDING TO NATURAL MATERIAL.
2. BEDDING IS REQUIRED PRIMARILY TO BRING THE TRENCH BOTTOM UP TO GRADE. BEDDING MATERIALS SHALL PROVIDE A UNIFORM AND ADEQUATE LONGITUDINAL SUPPORT UNDER THE PIPE. IN DRY SOIL CONDITIONS CLASS II OR CLASS III MATERIAL SHALL BE HAND PLACED 4" TO 6", LIGHTLY COMPACTED, UNIFORM AND NOT FINER THAN THE FOUNDATION MATERIAL. IN WET SOIL CONDITIONS CLASS I, CLASS II OR CLASS III SHALL BE HAND PLACED, 4" TO 6", UNIFORM AND NOT FINER THAN THE FOUNDATION MATERIAL. WHEN UTILIZING CLASS I MATERIAL, SUFFICIENT AMOUNTS OF CLASS II OR CLASS III MATERIAL SHALL BE ADDED TO FILL ALL VOIDS CREATED BY THE CLASS I MATERIAL.
3. HAUNCHING MATERIAL SHALL BE HAND PLACED TO THE SPRINGLINE OF THE PIPE. CLASS II OR CLASS III MATERIAL SHALL BE CONSOLIDATED UNDER THE PIPE AND HAND TAMPED TO PROVIDE ADEQUATE SIDE SUPPORT.
4. INITIAL BACKFILL MATERIAL SHALL BE CLASS II OR CLASS III. IT SHALL BE HAND PLACED TO 12", ABOVE THE TOP OF THE PIPE. THE SOIL SHALL BE CONSOLIDATED BY HAND TAMPING OR WALKING THE SOIL IN PLACE.
5. FINAL BACKFILL MATERIAL MAY BE MACHINE PLACED. THE MATERIAL SHALL BE CLASS II OR CLASS III MATERIAL. CLASS IV MATERIAL MAY BE INSTALLED OUTSIDE OF THE ROADWAY. FINAL BACKFILL UNDER ROADWAYS MAY REQUIRE SPECIAL COMPACTION AND DENSITY TESTS.

BACKFILL REQUIREMENTS (WW-2.2)

N.T.S.

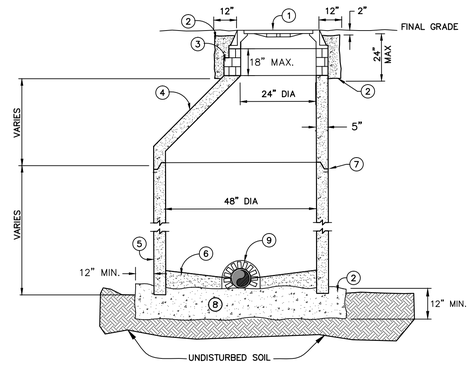

NOTES:

1. MANHOLE RING & COVER, 24" DIA.
2. CONCRETE COLLAR (2500 PSI)
3. BRICK & MORTAR
4. ECCENTRIC CONE, MANHOLE
5. MANHOLE BASE (OPEN BOTTOM)
6. BRICK W/ GROUT FILLER
7. JOINT SEALER
8. POURED-IN-PLACE CONCRETE BASE SLAB
9. PRE-FABRICATED OPENING IN MANHOLE – BRICK AND GROUT OPENING AROUND PIPE

OPEN BOTTOM MANHOLE (DOG HOUSE)

N.T.S.

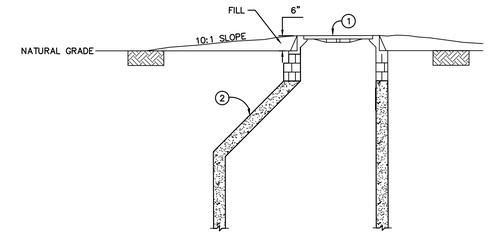

NOTE: WHEN MANHOLE IS OUTSIDE PAVEMENT, THE RIM ELEVATION SHALL BE 6" ABOVE NATURAL GRADE. WITH FILL ADDED FOR A 10:1 SLOPE TO NATURAL GRADE.

MATERIALS	
ITEM	DESCRIPTION
1	MANHOLE RING & COVER
2	ECCENTRIC CONE

NOTE: IN LOCATIONS WHERE STORMWATER INFILTRATION MAY BE POSSIBLE, A MANHOLE PAN WILL BE REQUIRED, AT GRU'S DISCRETION.

MANHOLE OUTSIDE OF PAVEMENT

N.T.S.

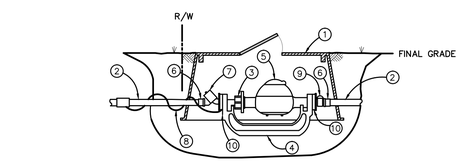

MATERIALS		
ITEM	DESCRIPTION	
1	METER BOX 2" (BY CONTRACTOR, TO COA SPECS-DWF1300.12.1T	
2	3" WATER MAIN	(BY CONTRACTOR)
3	YOKE EXPANSION WHEEL	
4	YOKE BAR – 2"	(BY CONTRACTOR)
5	WATER METER – 2"	(BY UTILITY COMPANY)
6	SCHEDULE 80 MALE ADAPTER	(BY CONTRACTOR)
7	DUAL CHECK VALVE	(BY CONTRACTOR)
8	TRACER WIRE COPPER BLUE INSULATED #10 AWG	
9	CURB STOP	(BY CONTRACTOR)
10	METER END CONNECTOR	(BY CONTRACTOR)

WATER METER WITH YOKE BAR ASSEMBLY DETAIL

N.T.S.

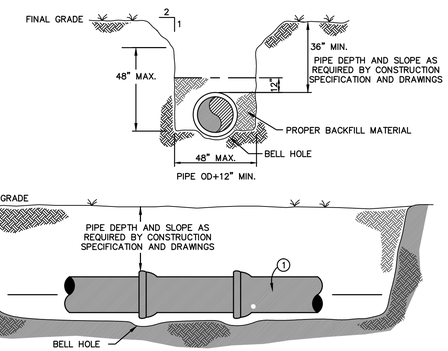

MATERIALS	
ITEM	DESCRIPTION
1	GRAVITY MAIN PIPE

NOTES:

1. GRAVITY MAIN PIPE SHALL BE INSTALLED AT THE LINE AND GRADE AS SHOWN ON THE PROFILES.

WASTEWATER GRAVITY MAIN CONSTRUCTION

N.T.S.

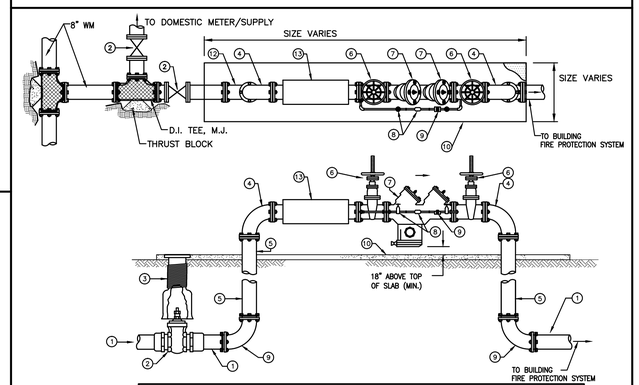

MATERIALS	
ITEM	DESCRIPTION
1	6" FIRE MAIN
2	6" GATE VALVE, FL X FL (END CITY MAINTENANCE)
3	VALVE BOX, C.I.
4	6" BEND 90° FL X FL
5	6" DUCTILE IRON PIPE-FLANGE X P.E.
6	6" OS & Y TYPE GATE VALVE
7	6" BACKFLOW PREVENTOR (DOUBLE CHECK OR REDUCED PRESSURE)
8	3/4" SHUTOFF VALVE AND DETECTION BYPASS METER
9	3/4" DETECTOR CHECK VALVE
10	6" CONCRETE SLAB (3500 PSI)
11	NOT USED
12	6" D.I. 90° BEND M.J. WITH EBAA MEGA LUG
13	6" FIRE LINE METER WITH STRAINER (UL LISTED AND FM APPROVED)

NOTES:

1. DETECTOR CHECK VALVE ASSEMBLY MAY NOT BE REQUIRED FOR ALL INSTALLATIONS.
2. BACKFLOW PREVENTER SHALL BE INSTALLED WITH A FREEZE PROTECTION BOX PER CITY OF ALACHUA STANDARDS.

6" FIRELINE CONNECTION WITH TURBINE METER AND DOUBLE CHECK BACKFLOW PREVENTER ASSEMBLY

N.T.S.

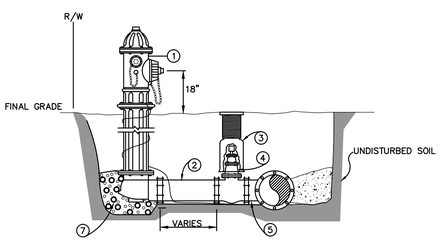

FIRE HYDRANT PERPENDICULAR TO THE MAIN

N.T.S.

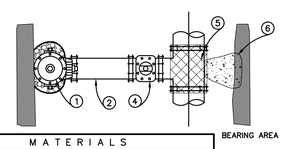

MATERIALS	
ITEM	DESCRIPTION
1	FIRE HYDRANT
2	ANCHORING COUPLING
3	VALVE BOX
4	GATE VALVE
5	ANCHORING TEE
6	CONCRETE THRUST BLOCK (2500 psi)
7	GRAVEL DRAIN BED
8	TRACER WIRE
9	ANCHORING, 90° BEND. M.J.

NOTES:

1. A NONPOROUS MATERIAL 8 MILS (MIN.) VISQUEEN OR 15 lb FELT SHOULD BE PLACED BETWEEN THE CONCRETE AND ENTIRE FITTINGS.

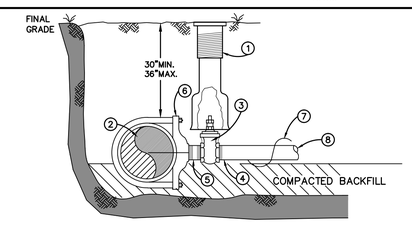

MATERIALS		MATERIALS	
ITEM	DESCRIPTION	ITEM	DESCRIPTION
1	VALVE BOX	6	8" x 3" SERVICE SADDLE
2	8" WATER MAIN	7	TRACER WIRE, BLUE, # 10 AWG
3	3" GATE VALVE, SQUARE NUT, RESILIENT WEDGE	8	3" PVC WATER LINE
4	3" x 6" LONG PVC PIPE		
5	3" x 4" LONG GALVINIZED NIPPLE		

POTABLE WATER SERVICE DETAIL VIA TAPPING SADDLE

GENERAL UTILITY NOTES

1. CONTRACTOR IS RESPONSIBLE FOR PROTECTION AND VERIFICATION OF EXISTING UTILITIES. ANY EXISTING UTILITY TO BE MODIFIED SHALL BE COORDINATED WITH THE CITY OF ALACHUA.
2. WATER METER ASSEMBLIES SHALL BE INSTALLED BY CITY OF ALACHUA.
3. ELECTRIC SERVICE TO BE COORDINATED WITH CITY OF ALACHUA PUBLIC SERVICES.
4. UTILITY INSTALLATION SHALL NOT TAKE PLACE WITHIN TREE BARRICADE AREA AS SHOWN ON THE PAVING, GRADING AND DRAINAGE PLAN.
5. THE CONTRACTOR SHALL BE RESPONSIBLE FOR THE DISPOSAL OF UNSUITABLE MATERIALS OFF-SITE AND FURNISH APPROVED MATERIAL PER CITY OF ALACHUA PUBLIC SERVICES FOR SANITARY SEWER LINES BACKFILL AT NO ADDITIONAL COST TO THE OWNER. THE CONTRACTOR MAY DISPOSE OF UNSUITABLE MATERIAL ON-SITE BY APPROVAL OF THE OWNER.
6. NO PERMANENT STRUCTURE SHALL BE CONSTRUCTED WITHIN 10 FEET OF ANY WATER LINE OR 15 FEET OF ANY SEWER LINE.
7. CONTRACTOR SHALL PROTECT LANDSCAPE AND ANY DISTURBED AREAS SHALL BE RESTORED AS EXISTING.

WATER DISTRIBUTION SYSTEM

1. NEW OR RELOCATED, UNDERGROUND WATER MAINS INCLUDED IN THIS PROJECT WILL BE LAID TO PROVIDE A HORIZONTAL DISTANCE OF AT LEAST 3' BETWEEN THE OUTSIDE OF THE WATER MAIN AND THE OUTISDE OF ANY EXISTING OR PROPOSED VACUUM-TYPE SANITARY SEWER, STOM SEWER, STORMWATER FORCE MAIN, OR PIPELINE CONVEYING RECLAIMED WATER; A HORIZONTAL DISTANCE OF AT LEAST 6' BETWEEN THE OUTSIDE OF THE WATER MAIN AND THE OUTISDE OF ANY EXISTING OR PROPOSED GRAVITY-TYPE SANITARY SEWER (OR HORIZONTAL DISTANCE OF AT LEAST 3' BETWEEN THE OUTSIDE OF THE WATER MAIN AND THE OUTISDE OF ANY EXISTING OR PROPOSED GRAVITY-TYPE SANITARY SEWER IF THE BOTTOM OF THE WATER MAIN WILL BE LAID AT LEAST SIX INCHES ABOVE THE TOP OF THE SEWER); A HORIZONTAL DISTANCE OF AT LEAST 6' BETWEEN THE OUTSIDE OF THE WATER MAIN AND THE OUTISDE OF ANY EXISTING OR PROPOSED PRESSURE-TYPE SANITARY SEWER, WASTEWATER FORCE MAIN, OR PIPELINE CONVEYING RECLAIMED WATER; AND A HORIZONTAL DISTANCE OF AT LEAST 10' BETWEEN THE OUTSIDE OF THE WATER MAIN AND ALL PARTS OF ANY EXISTING OR PROPOSED "ON-SITE SEWAGE TREATMENT AND DISPOSAL SYSTEM".
2. NEW OR RELOCATED, UNDERGROUND WATER MAINS THAT ARE INCLUDED IN THIS PROJECT AND THAT WILL CROSS ANY EXISTING OR PROPOSED GRAVITY- OR VACUUM-TYPE SANITARY SEWER OR STORM SEWER WILL BE LAID SO THE OUTSIDE OF THE WATER MAIN IS AT LEAST 6" ABOVE THE OTHER PIPELINE OR AT LEAST 12" BELOW THE OTHER PIPELINE; AND NEW OR RELOCATED, UNDERGROUND WATER MAINS THAT ARE INCLUDED IN THIS PROJECT AND THAT WILL CROSS ANY EXISTING OR PROPOSED PRESSURE-TYPE SANITARY SEWER, WASTEWATER OR STORMWATER FORCE MAIN, OR PIPELINE CONVEYING RECLAIMED WATER WILL BE LAID SO THE OUTSIDE OF THE WATER MAIN IS AT LEAST 12"ABOVE OR BELOW THE OTHER PIPELINE.
3. ALL ON-SITE FIRE HYDRANTS SHALL BE PAINTED PER THE REQUIREMENTS OF THE APPLICABLE MUNICIPALITY OR COUNTY. ALL FIRE HYDRANTS SHALL COMPLY WITH AWWA STANDARDS C502-80 THEREOF.
4. CONTRACTOR TO INSTALL TEMPORARY BLOWOFFS, AT THE END(S) OF PROPOSED WATER MAINS AND SERVICE LATERALS TO BUILDING(S), TO ASSURE ADEQUATE FLUSHING AND DISINFECTANT/CHLORINATION.
5. ALL WATER MAINS SHALL BE PRESSURE TESTED IN ACCORDANCE WITH AWWA MANUAL M23, CONCERING HYDROSTATIC TESTING OF PVC PIPING.
6. ALL WATER MAINS SHALL BE STERILIZED IN ACCORDANCE WITH THE APPLICABLE SECTION OF THE LATEST AWWA SPECIFICATION C651.
7. FIRE PROTECTION SHALL MEET ALL THE REQUIREMENTS OF THE APPLICABLE MUNICIPALITY OR COUNTY.
8. CONTRACTOR SHALL COORDINATE WITH CITY FOR CONSTRUCTION OF THE WATER SYSTEM. ALL MATERIAL AND WORKMANSHIP SHALL CONFORM TO THE SPECIFICATIONS AND REQUIREMENTS OF CITY AND WILL BE SUBJECT TO THEIR INSPECTION AND ACCEPTANCE.
9. ALL UTILITIES CONSTRUCTION CONNECTION TO THE CITY PUBLIC UTILITIES SYSTEM SHALL CONFORM TO CITY MANUAL OF STANDARDS AND SPECIFICATIONS FOR WASTEWATER AND WATER MAIN CONSTRUCTION.
10. WATER, SEWER, AND REUSE PIPES SHALL HAVE A MINIMUM COVER OF 3 FEET TO TOP OF PIPE, UNLESS OTHERWISE SPECIFIED.
11. CONTRACTOR SHALL VERIFY SIZE AND TYPE OF EXISTING MAIN PRIOR TO ORDERING TAPPING MATERIALS FOR TIE-INS.
12. CONCRETE CURBS SHALL BE CHISELED OR IMPRINTED TO SHOW LOCATIONS OF WATER AND SEWER SERVICE LINES/LATERALS. MARKING SHALL CONFORM WITH LOCAL STANDARDS. WHERE NO STANDARDS EXIST, USE "W" FOR WATER, "S" FOR SANITARY AND "R" FOR REUSE AS APPLICABLE.
13. WATER MAIN TAPS, WATER MAIN VALVES, AND BACKFLOW PREVENTORS SHALL BE DONE BY THE CONTRACTOR. WATER METERS AND METER BOXES SHALL BE INSTALLED BY THE CITY.
14. CONTRACTOR SHALL NOT ACTIVATE WATER SERVICES UNTIL THE FDEP HAS CLEARED THE SYSTEM FOR USE AND CLEARANCE LETTER HAS BEEN RECEIVED BY THE OWNER.
15. ALL PHASED WATER MAIN INSTALLATIONS SHALL END WITH A GATE VALVE AND BLOW-OFF.

SANITARY SEWER

1. PVC FORCE MAIN SEWER PIPE (4" TO 12") SHALL CONFORM TO AWWA C900, DR-18, CLASS 150. PVC FORCE MAIN PIPE FOURTEEN (14) INCHES AND LARGER SHALL BE AWWA C905 (LATEST REVISION) APPROVED CAST IRON O.D. DR-25 WITH FACTORY INSTALLED GASKETS. PVC MATERIAL SHALL MEET CELL CLASSIFICATION SPECIFIED BY ASTM D-1784.
2. GRAVITY SEWER MAINS AND LATERALS WITH 14 FEET OR LESS COVER FROM FINISHED GRADE SHALL BE PVC, SDR 35, GREEN IN COLOR OR GREEN STRIPED.
3. JOINTS FOR PVC SEWER SHALL BE COMPRESSION TYPE.
4. ALL SEWER MAINS TO HAVE A MINIMUM COVER OF 3'-0" UNLESS OTHERWISE NOTED.
5. UNLESS OTHERWISIE NOTED, MANHOLE COVERS SHALL BE ADJUSTED TO BE FLUSH WITH THE PAVEMENT ELEVATION AND GRADE OR 1" ABOVE GRADE IN UNPAVED AREAS.
6. AIR RELEASE VALVES SHALL BE INSTALLED AT ALL HIGH POINTS ALONG FORCE MAIN.
7. SERVICE CONNECTIONS SHALL BE 4" DIAMETER INSTALLED AT 1% MINIMUM SLOPE OR 6" DIAMETER INSTALLED AT 0.6% MINIMUM UNLESS OTHERWISE NOTED.
8. INSTALL A CLEANOUT TO FINISHED GRADE AT THE END OF EACH SERVICE LINE AND RECORD THEIR LOCATION.
9. THE SEWER COLLECTION SYSTEM SHALL NOT BE PLACED IN SERVICE UNTIL THE SYSTEM HAS BEEN VISUALLY INSPECTED AND FLUSHED OF SEDIMENT AND DEBRIS.
10. THE SEWER LINES SHALL BE TESTED BY ONE OF THE FOLLOWING METHODS: WATER INFILTRATION, WATER EXFILTRATION OR LOW PRESSURE AIR EXFILTRATION AS DIRECTED BY OWNER'S REPRESENTATIVE OR CITY INSPECTOR.

No.	Date	Comment

SCALES:
AS SHOWN

eda 40 years
engineers • surveyors • planners
EB 2389
2404 N.W. 43rd ST, GAINESVILLE, FLORIDA 32606-6600
TEL: (352) 373-3541 FAX: (352) 373-7249
www.edaFL.com mail@edaFL.com

Project: HOLIDAY INN ALACHUA
CITY OF ALACHUA, FLORIDA

Sheet title: UTILITY DETAILS AND NOTES

Project phase: CITY OF ALACHUA RESUBMITTAL

Designed: SJW Drawn: JMR Checked: TAR

Project No: 16-243 Date: 12/19/2016

Professional Engineer of Record: STATE OF FLORIDA PROFESSIONAL ENGINEER Sergio J. Rodriguez, P.E. Engineer Certificate No. 67311

Sheet No.: C4.10

\\server\engprojects\Holiday Inn - Alachua\Plans\Current DWG\H162331.dwg, C4.10 - UTIL DETAILS, 12/19/2016 3:12:12 PM, TAR

BOUNDARY AND TOPOGRAPHIC SURVEY

IN

IN A PORTION OF FRACTIONAL SECTION 9 TOWNSHIP 8 SOUTH, RANGE 18 EAST
CITY OF ALACHUA, ALACHUA COUNTY, FLORIDA
FOR
MPH HOTELS, INC.

NOTES:

1) BEARINGS AS SHOWN HEREON WERE PROJECTED FROM A BEARING OF S 01°49'00"E ON THE WEST BOUNDARY OF SECTION 9, TOWNSHIP 8 SOUTH, RANGE 18 EAST.

2) BEARINGS AND DISTANCES SHOWN IN PARENTHESES () REFER TO LEGAL DESCRIPTION WHERE THEY DIFFER FROM FIELD MEASUREMENT.

3) ALL CURB TYPES AS SHOWN ARE PER FLORIDA DEPARTMENT OF TRANSPORTATION INDEX 300.

4) NO SEARCH OF THE PUBLIC RECORDS WAS MADE BY THE SURVEYOR, THEREFORE, THERE MAY BE RESTRICTIONS OTHER THAN THOSE SHOWN HEREON WHICH MAY BE FOUND IN THE PUBLIC RECORDS OF ALACHUA COUNTY, FLORIDA. EASEMENTS AND BUILDING SETBACK REQUIREMENTS, OTHER THAN THOSE SHOWN, WERE NOT PROVIDED TO THIS SURVEYOR.

5) ELEVATIONS SHOWN HEREON WERE BASED ON AN ELEVATION OF 89.37 FEET (29 NGVD) ON TOP OF A 4"x4" CONCRETE MONUMENT AND DISK, FLORIDA D.O.T. BM NO. 39.

UTILITY LOCATION NOTE:

THE LOCATIONS OF UNDERGROUND UTILITIES SHOWN WERE BASED ON ABOVE GROUND FIXTURES, UTILITY COMPANY MAPS AVAILABLE TO THE SURVEYOR, AND ELECTRONIC DETECTION METHODS. UNLESS NOTED OTHERWISE ON THE GRAPHIC PORTION OF THIS SURVEY, NO UTILITIES WERE UNCOVERED TO VERIFY THEIR LOCATION.

NO GUARANTEE IS EITHER EXPRESSED OR IMPLIED BY THE SURVEYOR THAT THE LOCATIONS SHOWN REPRESENT THE ACTUAL LOCATIONS OF THOSE UTILITIES, THE UTILITY TYPE, OR THAT NO OTHER UTILITIES EXIST ON THE SITE.

PRIOR TO THE DESIGN OF UTILITY CONNECTIONS, THE PROPOSED CONNECTION POINTS SHOULD BE EXCAVATED AS NECESSARY TO CONFIRM THEIR EXACT LOCATION, DEPTH AND CHARACTERISTICS.

IN ACCORDANCE WITH FLORIDA STATUTE CHAPTER 556, PRIOR TO ANY EXCAVATION, THE EXCAVATOR SHALL CONTACT SUNSHINE STATE ONE CALL OF FLORIDA AT 1-800-432-4770.

LEGAL DESCRIPTION:

A portion of Fractional Section 9, Township 8 South, Range 18 East, Alachua County, Florida; being more particularly described as follows:

Commence at the Northwest corner of Fractional Section 9, Township 8 South, Range 18 East, Alachua County, Florida and run thence South 01°49'00" East, along the west boundary of said Section, 1576.08 feet; thence North 88°33'13" East, 1300.20 feet to the Northwest corner of that certain tract of land as described in Official Records Book 503, page 107 of the Public Records of Alachua County, Florida; thence South 01°49'00" East, along the West line of said certain tract of land, 1347.88 feet to a 4" X 4" concrete monument (stamped "LB 5091 BARRINEAU") as depicted on "Heritage Oaks Phase I", a subdivision as per plat thereof, recorded in Plat Book 24, page 79 of said Public Records; thence South 78°52'28" East, along the South boundary of said Heritage Oaks Phase I, a distance of 933.22 feet to the Point of Beginning; thence continue South 78°52'28" East, along said South boundary, 324.76 feet to the Southeast corner of said Heritage Oaks Phase I and to a point on the East line of that certain tract of land as described in Official Records Book 27, page 296 of said Public Records; thence South 03°06'22" East, along said East line, 514.31 feet; thence North 73°46'22" West, 416.85 feet to a point on the East line of an Ingress and Egress, Road Improvements, and Public Utilities Easement Agreement recorded in Official Records Book 4400, page 2104 of said Public Records, said point lying on the arc of a curve, concave southwesterly, having a radius of 301.00 feet; thence northwesterly, along the East line of said Ingress and Egress, Road Improvements and Public Utilities Easement Agreement, through the following three (3) courses: (1) run thence northwesterly along the arc of said curve through a central angle of 19°31'14", an arc distance of 102.55 feet to the end of said curve, said arc being subtended by a chord having a bearing and distance of North 27°02'33" West, 102.06 feet, (2) North 36°48'10" West, 46.40 feet to the beginning of a curve, concave southwesterly, having a radius of 201.00 feet, (3) thence northwesterly, along the arc of said curve, through a central angle of 12°08'02", an arc distance of 42.57 feet, said arc being subtended by a chord having a bearing and distance of North 42°52'11" West, 42.49 feet; thence North 60°21'17" East, 193.23 feet; thence North 03°06'22" West, 205.27 feet to the Point of Beginning.

Together with rights of ingress and egress over and across the right-of-way described in the Amendment to Ingress-Egress Road Improvements recorded in O.R. Book 4400, page 2104, Public Records of Alachua County, Florida.

LEGEND OF SYMBOLS & ABBREVIATIONS:

ci	=	CURB INLET
cmp	=	CORRUGATED METAL PIPE
cpe	=	CORRUGATED POLY-ETHYLENE PIPE
CONC	=	CONCRETE
D	=	DELTA (CENTRAL) ANGLE
R	=	RADIUS
A	=	ARC
T	=	TANGENT
CB	=	CHORD BEARING
CD	=	CHORD DISTANCE
ELEV	=	ELEVATION
ID.	=	IDENTIFICATION
inv	=	INVERT
L.F.	=	LINEAR FEET
No.	=	NUMBER
O.R.	=	OFFICIAL RECORDS BOOK
PGS.	=	PAGES
PVC	=	POLY-VINYL CHLORIDE
RCP	=	REINFORCED CONCRETE PIPE
R/W	=	RIGHT OF WAY
SECTION 9-8-18	=	FRACTIONAL SECTION 9, TOWNSHIP 8 SOUTH, RANGE 18 EAST
SI	=	STORM SEWER INLET
SMH	=	SANITARY SEWER MANHOLE
STMH	=	STORM SEWER MANHOLE
TRAN	=	ELECTRICAL TRANSFORMER PAD
w/	=	WITH
CO	=	SANITARY CLEAN-OUT
	=	FOUND CONCRETE MONUMENT (size, ID)
	=	FOUND NAIL & DISK (ID)
	=	FOUND REBAR & CAP (size, ID)
ELECHH	=	ELECTRICAL HANDHOLE
LT PL	=	LIGHT POLE
	=	MANHOLE
	=	SET 5/8" REBAR & CAP (LB 2389)
	=	SET NAIL & DISK (PRM LB 2389)
	=	SIGN
WV	=	WATER VALVE
80	=	ELEVATION CONTOUR LINE
X X	=	FENCE LINE
UGE	=	UNDERGROUND ELECTRIC LINE
GAS	=	UNDERGROUND GAS LINE
UGT	=	UNDERGROUND TELEPHONE LINE
UGTV	=	UNDERGROUND CABLE TELEVISION LINE
WL	=	UNDERGROUND WATER LINE
(6" PVC)	=	SIZE AND/OR MATERIAL AS PROVIDED BY UTILITY COMPANY
88.9 X	=	SPOT ELEVATION

TREE LEGEND:

ONLY TREES WITH A DIAMETER 8" AND GREATER WERE LOCATED FOR THIS SURVEY.
(DIAMETER MEASURED 4.5' ABOVE GROUND)

LOCATION / SPECIES / DIAMETER AT 4.5' ABOVE GRADE

		SIZE/COMMON NAME
ce10.	=	10" CEDAR
ch16.	=	16" CHERRY
lao14.	=	14" LAUREL OAK
lo21.	=	22" LIVE OAK
mg12.	=	12" MAGNOLIA
sg13.	=	13" SWEETGUM
wo9.	=	9" WATER OAK

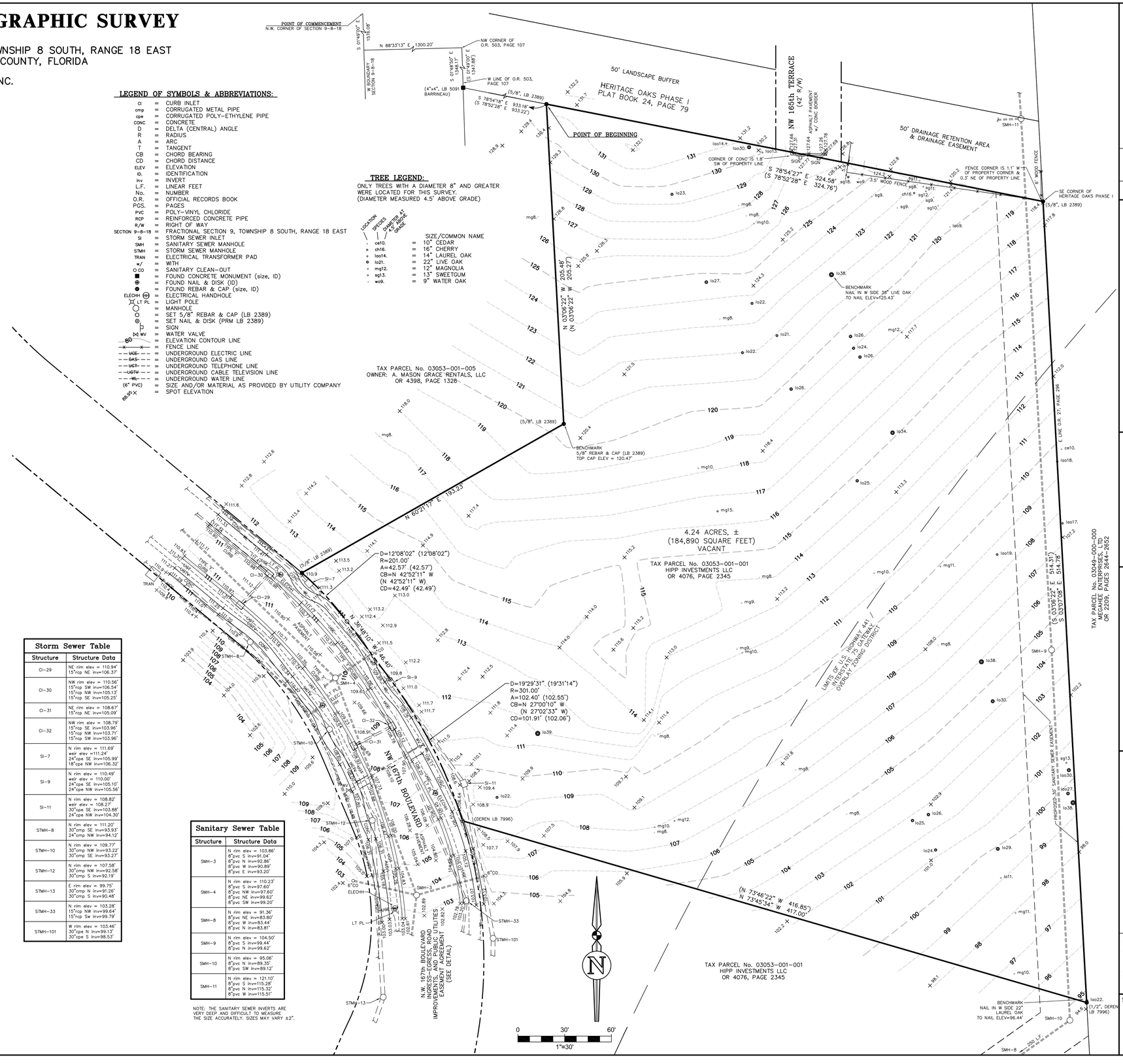

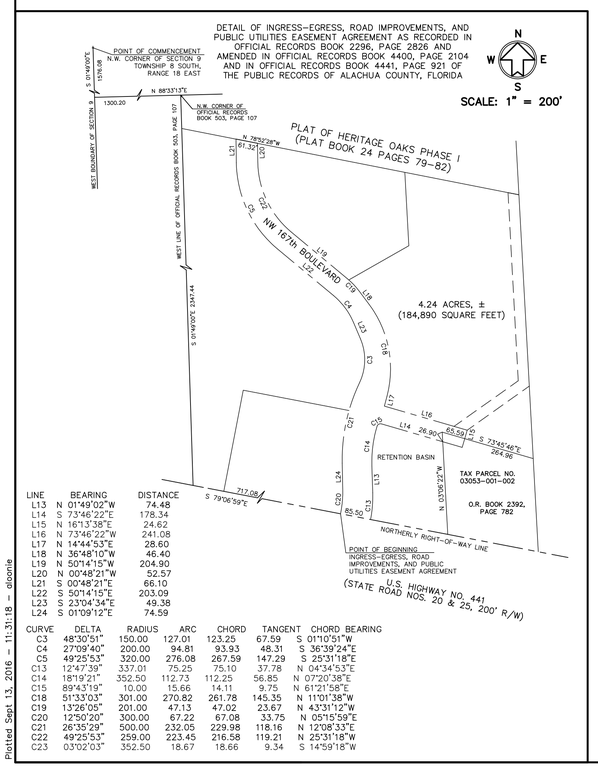

LINE	BEARING	DISTANCE
L13	N 01°49'02"W	74.48
L14	S 73°46'22"E	178.34
L15	N 16°13'38"E	24.62
L16	N 73°46'22"W	241.08
L17	N 14°44'53"E	28.60
L18	N 36°48'10"W	46.40
L19	N 50°14'15"W	204.90
L20	N 00°48'21"W	52.57
L21	S 00°48'21"E	66.10
L22	S 50°14'15"E	203.09
L23	S 23°04'34"E	49.38
L24	S 01°09'12"E	74.59

CURVE	DELTA	RADIUS	ARC	CHORD	TANGENT	CHORD BEARING
C3	48°30'51"	150.00	127.01	123.25	67.59	S 01°10'51"W
C4	27°09'40"	200.00	94.81	93.93	48.31	S 36°39'24"E
C5	49°25'53"	320.00	276.08	267.59	147.29	S 25°31'18"E
C13	12°47'39"	337.01	75.25	75.10	37.78	N 04°34'53"E
C14	18°19'21"	352.50	112.73	112.25	56.85	N 07°20'38"E
C15	89°43'19"	10.00	15.66	14.11	9.75	N 61°21'58"E
C18	51°33'03"	301.00	270.82	261.78	145.35	N 11°01'38"W
C19	13°26'05"	201.00	47.13	47.02	23.67	N 43°31'12"W
C20	12°50'20"	300.00	67.22	67.08	33.75	N 05°15'59"E
C21	26°35'29"	500.00	232.05	229.98	118.16	N 12°08'33"E
C22	49°25'53"	259.00	223.45	216.58	119.21	N 25°31'18"W
C23	03°02'03"	352.50	18.67	18.66	9.34	S 14°59'18"W

Storm Sewer Table

Structure	Structure Data
CI-29	NE rim elev = 110.94' 15"rcp NE inv=106.37'
CI-30	NW rim elev = 110.56' 15"rcp SW inv=106.54' 15"rcp NW inv=105.13' 15"rcp SE inv=105.25'
CI-31	NE rim elev = 108.67' 15"rcp NE inv=105.09'
CI-32	NW rim elev = 108.79' 15"rcp SE inv=103.96' 15"rcp NW inv=103.71' 15"rcp SW inv=103.96'
SI-7	N rim elev = 111.69' weir elev =111.24' 24"cpe SE inv=105.99' 18"cpe NW inv=106.32'
SI-9	N rim elev = 110.49' weir elev = 110.00' 24"cpe SE inv=105.10' 24"cpe NW inv=105.56'
SI-11	N rim elev = 108.82' weir elev = 108.27' 30"cpe SE inv=103.88' 24"cpe NW inv=104.30'
STMH-8	N rim elev = 111.20' 30"cmp SE inv=93.93' 24"cmp NW inv=94.12'
STMH-10	N rim elev = 109.77' 30"cmp NW inv=93.22' 30"cmp SE inv=93.27'
STMH-12	N rim elev = 107.58' 30"cmp NW inv=92.58' 30"cmp S inv=92.19'
STMH-13	E rim elev = 99.75' 30"cmp N inv=91.26' 30"cmp S inv=90.48'
STMH-33	N rim elev = 103.28' 15"rcp NW inv=99.64' 15"rcp Sw inv=99.79'
STMH-101	W rim elev = 103.46' 30"cpe N inv=99.13' 30"cpe S inv=98.53'

Sanitary Sewer Table

Structure	Structure Data
SMH-3	N rim elev = 103.86' 8"pvc S inv=91.04' 8"pvc N inv=92.86' 8"pvc W inv=90.89' 8"pvc E inv=93.20'
SMH-4	N rim elev = 110.23' 8"pvc S inv=97.60' 8"pvc NW inv=97.60' 8"pvc NE inv=99.62' 8"pvc SW inv=99.20'
SMH-8	N rim elev = 91.36' 8"pvc NE inv=83.80' 8"pvc W inv=83.44' 8"pvc N inv=83.81'
SMH-9	N rim elev = 104.50' 8"pvc S inv=99.44' 8"pvc N inv=99.62'
SMH-10	N rim elev = 95.06' 8"pvc N inv=89.35' 8"pvc SW inv=89.12'
SMH-11	N rim elev = 121.10' 8"pvc S inv=115.28' 8"pvc N inv=115.32' 8"pvc W inv=115.51'

NOTE: THE SANITARY SEWER INVERTS ARE VERY DEEP AND DIFFICULT TO MEASURE. THE SIZE ACCURATELY. SIZES MAY VARY ±2".

FLOOD INSURANCE RATE MAP STATEMENT

THE REAL PROPERTY SHOWN HEREON LIES WITHIN
ZONE(s) X (UNSHADED) AS DESIGNATED ON THE FLOOD
INSURANCE RATE MAP NUMBER 12001C0120D, COMMUNITY
NUMBER: 120064, PANEL: 0120D, EFFECTIVE DATE:
06/16/06 AREAS SAID MAP DESCRIBES ZONE(s) X (UNSHADED)
AS BEING "AREAS DETERMINED TO BE OUTSIDE THE 0.2% ANNUAL
CHANCE FLOODPLAIN."

No.	Date	Comment

eda years
eda engineers-surveyors-planners, inc.
LB 2389
2404 N.W. 43rd ST. GAINESVILLE, FLORIDA 32606-6603
TEL: (352) 373-3541 FAX: (352) 373-7929
E-MAIL: mail@eda-inc.com

eda engineers-surveyors-planners, inc.
Corporate Authorization No. LB 2389
By: ROBERT W. CRAVEY P.S.M. 4239

Project No.	2016-0233 S01
Drawn	A.L.
Check	B.G.

Fieldbook	Page	Survey date	Drawing Completed	Revised
957	5-12	09/09/16	09/13/16	

PREPARED FOR: 1) MPH HOTELS, INC.
2) SALTER FEIBER, P.A.
3) OLD REPUBLIC NATIONAL TITLE INSURANCE COMPANY

THIS SURVEY MEETS THE STANDARDS OF PRACTICE AS SET FORTH BY THE FLORIDA BOARD OF PROFESSIONAL SURVEYORS AND MAPPERS IN CHAPTER 5J-17, FLORIDA ADMINISTRATIVE CODE, PURSUANT TO SECTION 472.027, FLORIDA STATUTES. THIS SURVEY DEPICTS THE SITE CONDITIONS AS OF 09/09/16.

Sheet No.:

V-001

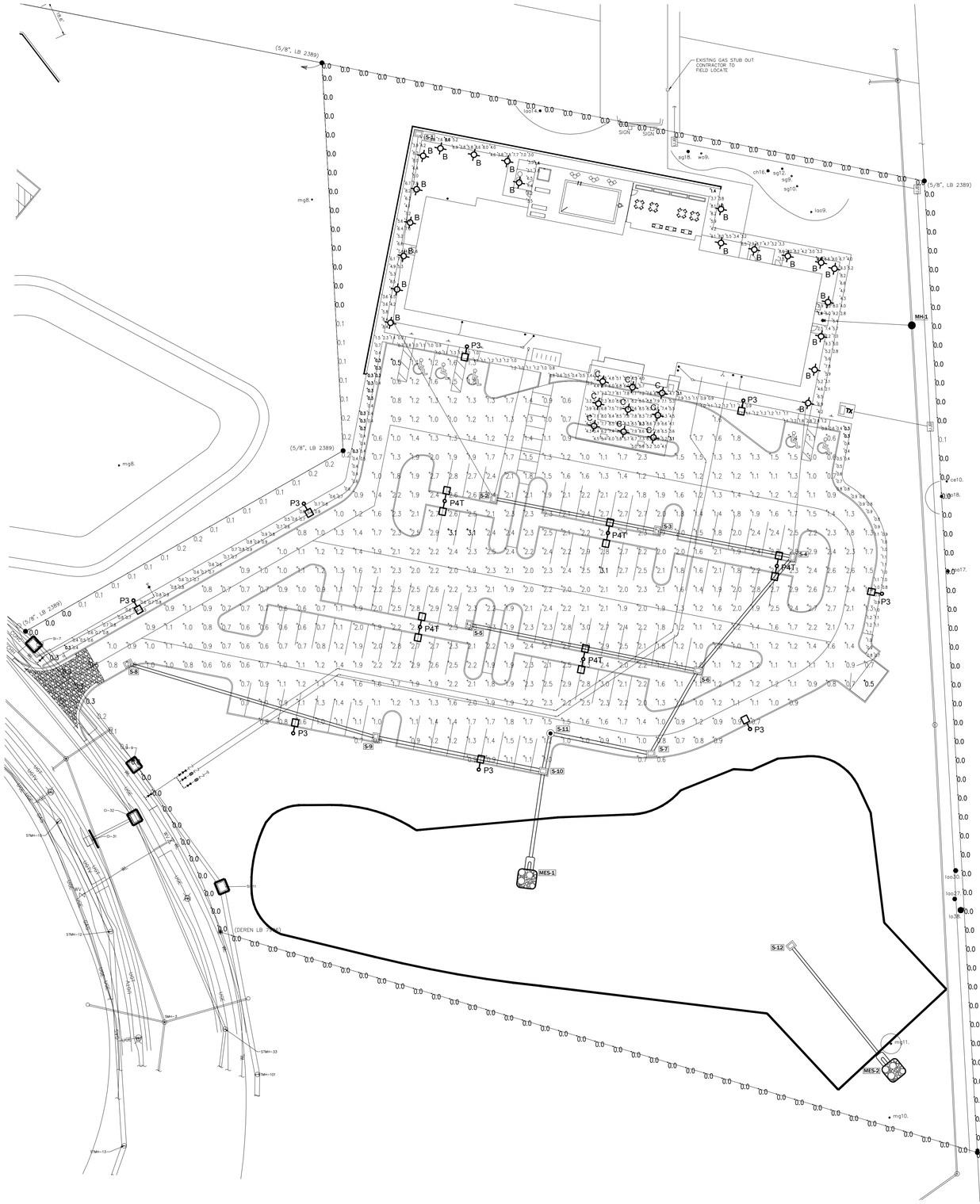

LUMINAIRE SCHEDULE FOR PHOTOMETRICS

Symbol	Label	Qty	Manufacturer	Catalog Number	Description	Lamp	File	Lumens	LLF	MH
	P4T	5	CREE	ARE-EDG-4M-**-06--E-12-525-40K (700mA)	CONFIGURED FROM Cree Edge Area, Type IV Medium, 60 LEDs, 525mA, 4000K	CONFIGURED FROM Sixty White LEDs	ARE-EDG-4M-__-06-E-12-525--40K-CONFIGURED.IES	10527	0.81	25
	P3	8	CREE	ARE-EDG-3MB-**-04-E-12-700-40K (700mA)	CONFIGURED FROM 60 LED Type III Medium Optic w/ Full Backlight 700mA 4000K LEDway Streetlight	CONFIGURED FROM SIXTY WHITE LIGHT EMITTING DIODES (LEDS)	ARE-EDG-3MB-__-04-E-12-700-40K-CONFIGURED.IES	5876	0.81	25
	B	20	CREE	PWY-EDG-3M-xx-02-E-UL-350-40K / BXBPx318E-UH7	Cree Edge Pathway Luminaire, Type III Medium, 18 LEDs, 120-277V, 350mA, 4000K	Eighteen type XP-G2 LEDs	PWY-EDG-3M-xx-02-E-UL-350-40K_PL05698-001.IES	1469	0.81	3.75
	C	9	CREE	KR6-20L-27K-120V	FORMED STEEL FRAME, ALUMINUM HEATSINK HOUSING, FROSTED PLASTIC LENS	n/a	Cree_Downlight_KR6_20L_XXK_XXXV_SSGC_IES.IES	1652	0.81	VARIES MAX 15FT

NOTE: TYPE 'P3' UTILIZES INTEGRAL BACKLIGHT SHIELD TO MITIGATE LIGHT TRESPASS. THESE FIXTURES ARE LOCATED AT THE PERIMETER OF THE PARKING AREA AND ARE AIMED INWARDS TO PREVENT SPILLOVER ONTO THE ADJACENT PROPERTY.

PHOTOMETRIC STATISTICS

Description	Symbol	Avg	Max	Min	Max/Min	Avg/Min
EAST ENTRY WALK	+	5.4 fc	9.6 fc	1.4 fc	6.9:1	3.9:1
WEST ENTRY WALK	+	5.7 fc	8.6 fc	1.4 fc	6.1:1	4.1:1
PARKING LOT SIDEWALK	+	0.8 fc	2.9 fc	0.3 fc	9.7:1	2.7:1
PORTE COCHERE	+	6.5 fc	9.3 fc	3.1 fc	3.0:1	2.1:1
PARKING LOT	+	1.6 fc	3.1 fc	0.5 fc	6.2:1	3.2:1
PROPERTY LINE	+	0.0 fc	0.3 fc	0.0 fc	N / A	N / A

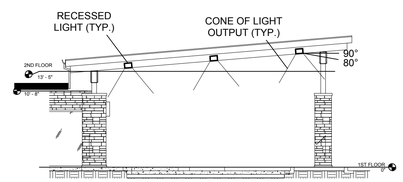

CANOPY LIGHTING DETAIL

SCALE: 1" = 10'

CANOPY DETAIL NOTES

1. LIGHT FIXTURES SHALL BE PROVIDED WITH SLOPED CEILING ADAPTER.

2. NO LIGHT EMITTED ABOVE 80°, THEREFORE THE SPECIFIED INSTALLATION IS FULL CUT-OFF.

GENERAL NOTES

1. HIGHLIGHTED POINTS REPRESENT MAXIMUM/MINIMUM VALUE FOR EACH AREA.

2. FIXTURES WILL BE CONTROLLED WITH PHOTOCELL AND OPERATE DUSK-TO-DAWN.

3. POLE LIGHT LOCATIONS HAVE BEEN COORDINATED WITH EXISTING AND PROPOSED TREES.

NORTH

SITE PHOTOMETRIC PLAN

SCALE: 1" = 30'

NIX ENGINEERING INC.
2711 NW 6TH ST STE B
GAINESVILLE, FL 32609
(352) 271-9900

FLORIDA CA#8798, PE#28635
GEORGIA CA#PEF003627, PE#14888

Project Number	1680
Date	12/19/16
Designed By	KMH
Checked By	RJN

Rev	Date	Description

NIX ENGINEERING, INC.
CONSULTING ENGINEERS
2711 NW 6TH ST, STE B
GAINESVILLE, FLORIDA

HOLIDAY INN EXPRESS
SITE PHOTOMETRIC PLAN
ALACHUA, FL

Drawing Number

E-1

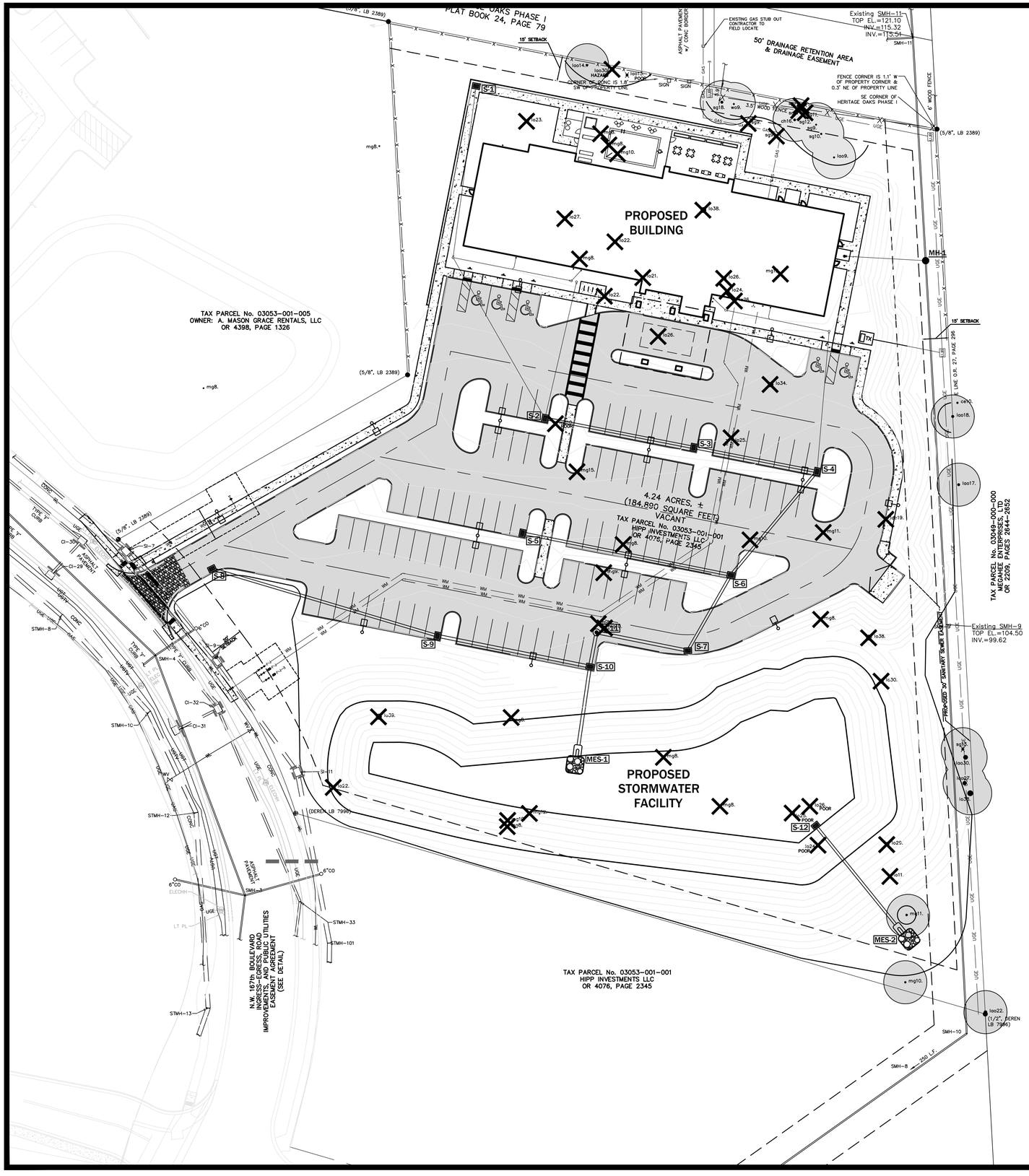

TREE LEGEND

THE ONLY TREES LOCATED FOR THIS SURVEY WERE HARDWOODS 8" AND GREATER AND PINES 12" AND GREATER (DIAMETER MEASURED AT BREAST HEIGHT)

LOCATION / SPECIES		SIZE/COMMON NAME
ba10.	=	10" BAY
cb11.	=	11" CHINABERRY
ce11.	=	11" CEDAR
ch12.	=	12" CHERRY
cht10.	=	10" CHINESE TALLOW
hi11.	=	11" HICKORY
lao12.	=	12" LAUREL OAK
lo15.	=	15" LIVE OAK
mb12.	=	12" MULBERRY
mg18.	=	18" MAGNOLIA
pa18.	=	18" PALM
pi14.	=	14" PINE
po9.	=	9" POST OAK
sa11.	=	11" SUGARBERRY
sg17.	=	17" SWEETGUM
tko11.	=	11" TURKEY OAK
tree18.	=	18" UNIDENTIFIED TREE
wo14.	=	14" WATER OAK

lo27. EXISTING PINES AND OAKS TO REMAIN

mg8. TREES TO BE REMOVED

NOTES

SEE SHEET L-4 FOR TREE MITIGATION TABLE.

0 30' 60'
1" = 30'-0"
NORTH

PREPARED BY:

ZAMIA DESIGN
Landscape Architecture
3459 NW 13th Avenue
Gainesville, Florida 32605
Ph. 352-373-8220 Fax 866-845-7717
LC 26000252

PREPARED FOR:

MPH HOTELS, INC.

ST. PETERSBURG, FL

PROJECT:

HOLIDAY INN ALACHUA

SHEET TITLE:

TREE MITIGATION

PROJECT PHASE:

CITY OF ALACHUA RESUBMITTAL

ISSUE DATE:

DECEMBER 19, 2016

REVISIONS

NO.	DATE	COMMENTS

PROFESSIONAL SEAL:

LAWRENCE E. TEAGUE
FLORIDA: LA0001582

PROJECT NUMBER:

16034.1

DRAWN BY:	CHECKED BY:
ALZ	LET

SHEET NUMBER:

L-1

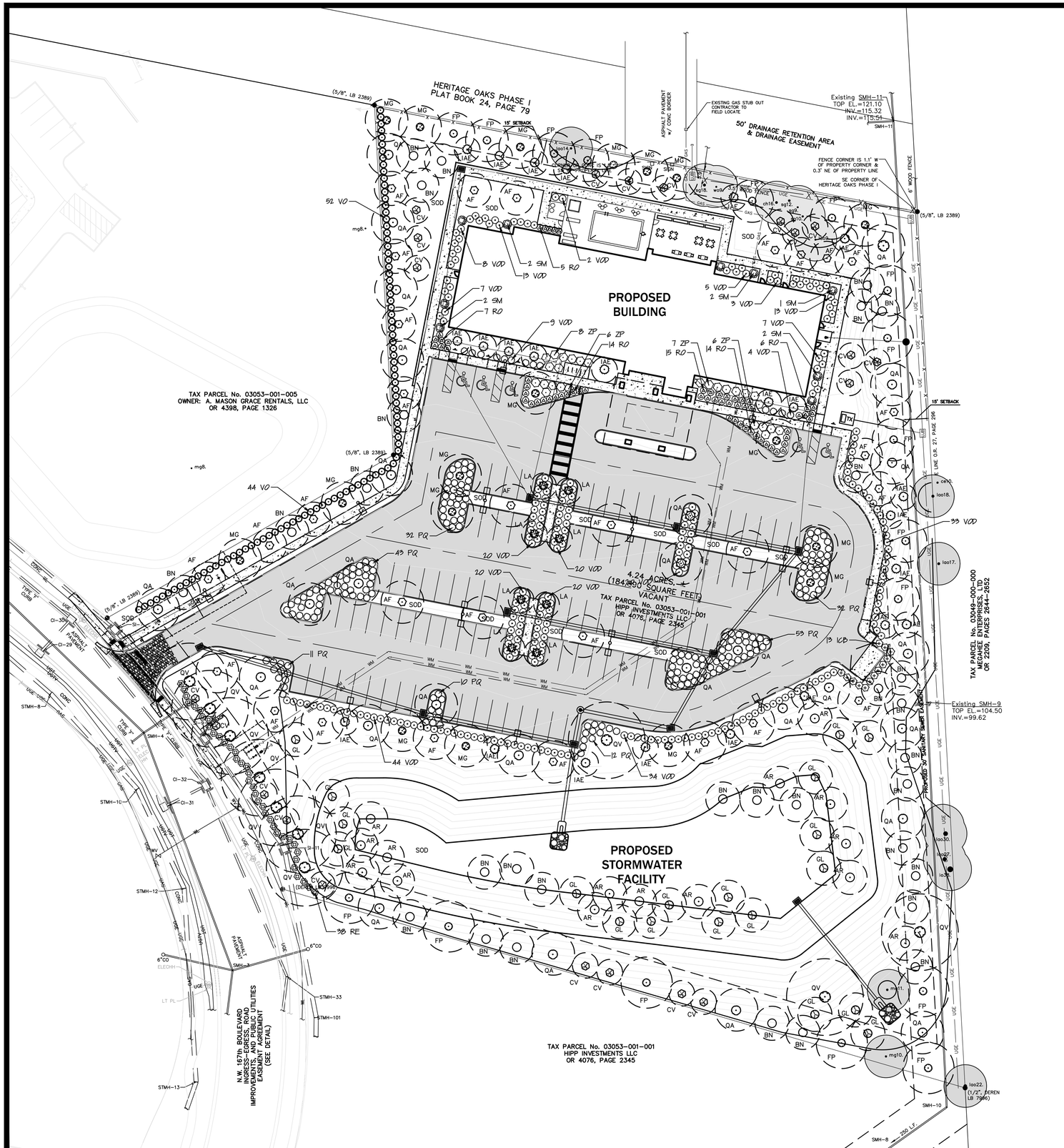

PLANT MATERIAL SCHEDULE

SYM	QTY	BOTANICAL NAME	COMMON NAME	MINIMUM CONTAINER	HT X WIDTH (Caliper)	SPACING	FLA NATIVE	DROUGHT TOLERANCE
		CANOPY TREES						
AF	30	Acer saccharum 'Jeffers Red'	Autumn Blaze Maple	30 Gal	8-10' x 4' (2" cal)	As Shown	Y	H
AR	15	Acer rubrum 'October Glory'	October Glory Maple	30 Gal	8-10' x 4' (2" cal)	As Shown	Y	M
FP	15	Fraxinus pennsylvanica	Green Ash	30 Gal	8-10' x 4' (2" cal)	As Shown	Y	H
GL	19	Gordonia lasianthus	Loblolly Bay	30 Gal	8-10' x 4' (2" cal)	As Shown	Y	M
MG	18	Magnolia grandiflora 'DD Blanchard'	DD Blanchard Magnolia	30 Gal	8-10' x 4' (2" cal)	As Shown	Y	M
QA	28	Quercus alba	White Oak	30 Gal	8-10' x 4' (2" cal)	As Shown	Y	H
QV	10	Quercus virginiana	Live Oak	30 Gal	8-10' x 4' (2" cal)	As Shown	Y	H
		UNDERSTORY TREES						
BN	31	Betula Nigra	River Birch	15 Gal	6-8' x 3' (1.5" cal)	As Shown	Y	M
CV	21	Chionanthus virginicus	Fringe Tree	15 Gal	6-8' x 3' (1.5" cal)	As Shown	Y	M
IAE	24	Ilex x attenuata 'Eagleston'	Eagleston Holly	15 Gal	6-8' x 3' (1.5" cal)	As Shown	Y	H
LA	8	Lagerstroemia 'Natchez'	Natchez Crape myrtle	15 Gal	6-8' x 3' (1.5" cal)	As Shown	no	H
		SHRUBS						
VO	129	Viburnum odoratissimum	Sweet Viburnum	3 Gal	24" x 20"	4' O.C.	no	H
ICB	13	Ilex comuta 'Burfordii Nana'	Dwarf Burford Holly	3 Gal	24" x 20"	4' O.C.	no	0
VOD	235	Viburnum obovatum ' Densa'	Dwarf Walter's Viburnum	3 Gal	24" x 20"	4' O.C.	Y	M
PQ	206	Paspalum quadrifarium	Tussock Paspalum	3 Gal	Full	4' O.C.	no	H
RE	38	Rhododendron' Encore'	Envore Azalea	3 Gal	24" x 20"	2.5' O.C.	no	M
RO	56	Rhododendron obtusum 'Red Ruffles'	Red Ruffles Azalea	3 Gal	24" x 20"	2.5' O.C.	no	M
SM	9	Sabal minor	Blue-stem Palmetto	3 Gal	24" x 20"	As Shown	Y	H
ZP	28	Zamia pumila	Coontie	3 Gal	24" x 20"	4' O.C.	Y	H
		TURF						
SOD		Paspalum notatum 'Argentine'	Argentine Bahia					

0 30' 60'
1" = 30'-0"
NORTH

PREPARED BY:
ZAMIA DESIGN
Landscape Architecture
3459 NW 13th Avenue
Gainesville, Florida 32605
Ph. 352-373-8220 Fax 866-845-7717
LC 26000252

PREPARED FOR:

MPH HOTELS, INC.

ST. PETERSBURG, FL

PROJECT:

HOLIDAY INN ALACHUA

SHEET TITLE:

LANDSCAPE PLAN

PROJECT PHASE:

CITY OF ALACHUA RESUBMITTAL

ISSUE DATE:

DECEMBER 19, 2016

REVISIONS

NO.	DATE	COMMENTS

PROFESSIONAL SEAL:

LAWRENCE E. TEAGUE
FLORIDA: LA0001582

PROJECT NUMBER:

16034.1

DRAWN BY: ALZ

CHECKED BY: LET

SHEET NUMBER:

L-2

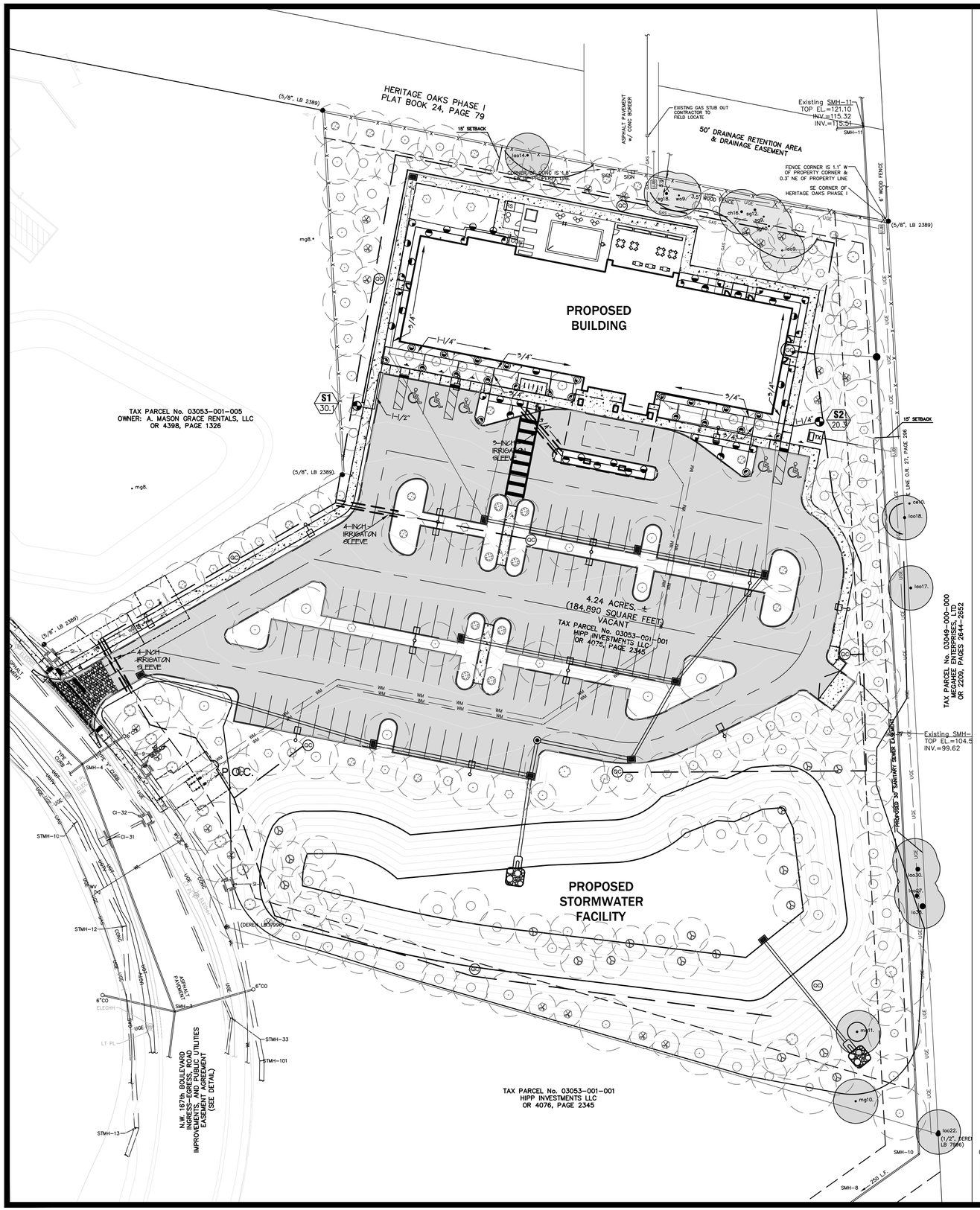

LEGEND

S1 / 00.0 — ZONE NUMBER (S = SRAY ZONE; R = ROTOR ZONE)
— GPM PER ZONE

P.O.C. POINT OF CONNECTION

ZONE GPM CALCULATIONS

ZONE	GPM	AREA	PRECIPITATION RATE
S1	30.10	2,950 SF	0.98 IN/HR
S2	20.30	2,040 SF	0.96 IN/HR

WATERING SCHEDULE

ESTABLISHMENT - FIRST 2 MONTHS

ZONE	TYPE	TIME	FREQUENCY
SMALL TREES, SHRUBS, & SOD			
S1	SPRAY	20 MINUTES	2 DAYS / WEEK
S2	SPRAY	20 MINUTES	2 DAYS / WEEK

AFTER ESTABLISHMENT

ZONE	TYPE	TIME	FREQUENCY
SMALL TREES, SHRUBS, & SOD			
MARCH - OCTOBER			
S1	SPRAY	20 MINUTES	1 DAY / WEEK
S2	SPRAY	20 MINUTES	1 DAY / WEEK
NOVEMBER - FEBRUARY			
S1	SPRAY	20 MINUTES	1 DAY/ 2 WEEKS
S2	SPRAY	20 MINUTES	1 DAY/ 2 WEEKS

IRRIGATION COMPONENT SCHEDULE

RAINBIRD 1800 SERIES SPRAY HEADS - FIXED NOZZLES

SYMBOL	HEAD SPEC	NOZZLE/PATTERNS (GPM @ 30)
	1812	15Q (0.9) 15T (1.2) 15H (1.9) 15TT (2.5) 15TQ (2.8) 15F (3.7)
	1812	8Q (0.3) 8T (0.4) 8H (0.5) 8TQ (0.8) 8F (1.1)

COMPONENTS

SYMBOL	COMPONENT	MANUFACTURER – MODEL – SIZE
QC	QUICK COUPLING VALVE	RAINBIRD MODEL 44RC: 1 INCH
	ELEC REMOTE-CONTROL VALVE	RAINBIRD 150-PEB-PRS-D 1.5 INCH GLOBE VALVE W/ PRESSURE REG
	VALVE BOXES	RAINBIRD, AMEMTEX OR CARSON IN-GROUND PLASTIC VALVE BOX WITH BOLT-LOCKING LID, MARKED IRRIGATION
RS	RAIN SENSOR	RAINBIRD RSD-BEX / RSD-CEX
CON	CONTROLLER	RAINBIRD ESP-12MC 12 STATION, METAL CABINET
	IRRIGATION SLEEVE – SIZED AS SHOWN – PVC SCHEDULE 40	
3/4	LATERAL LINE – SIZED AS SHOWN – PVC	
	2 INCH MAINLINE – PVD SCHEDULE 40	

GENERAL IRRIGATION NOTES

THIS PLAN IS DIAGRAMMATIC. ALL PIPING OR VALVES SHOWN OUTSIDE OF LANDSCAPE AREAS ARE SHOWN THERE FOR CLARITY. ALL LINES AND VALVES SHALL BE INSTALLED INSIDE LANDSCAPE AREAS.
A. MAINLINE TO BE INSTALLED 12 INCHES FROM BACK OF CURB.
B. HEADS TO BE INSTALLED 12 INCHES FROM BACK OF CURB OR SIDEWALK EDGE.

THE IRRIGATION DESIGN IS BASED ON THE WATER SOURCE, CONNECTION AND FLOW INFORMATION SHOWN. IF THIS INFORMATION IF FOUND TO BE INCORRECT, CONTACT LANDSCAPE ARCHITECT.

THE IRRIGATION DESIGN IS BASED ON THE COMPONENTS SHOWN IN THE SCHEDULE. EQUIVALENT SUBSTITUTIONS TO BE APPROVED BY LANDSCAPE ARCHITECT, ETC.)

ALL PRIMARY AND LATERAL PIPING AND FITTINGS WILL BE SCHEDULE 40 PVC

ALL HEADS PLACED IN TURF AREAS ARE 4" POP-UPS.
IN GROUND COVER BEDS ARE 12" POP-UPS.
IN SHRUB AREAS ARE ON SHRUB RISERS.

ALL SPRAY AND ROTARY HEADS ARE TO HAVE LOW TRAJECTORY NOZZLES.

ALL MAINLINE TURNS TO BE REINFORCED WITH THRUST BLOCKS.

A RAIN SENSOR DEVICE HAS BEEN LOCATED NEAR THE CONTROLLER.

CONFIRM CONTROLLER LOCATION WITH OWNER.

SPECIFIC IRRIGATION NOTES

ALL PLANTING AREAS IN THIS PLAN ARE CONSIDERED MODERATE WATER USE ZONES.

A PERMANENT IRRIGATION SYSTEM HAS BEEN PROVIDED FOR THE AREAS IMMEDIATELY AROUND THE PROPOSED BUILDING. THIS GIVES THE OWNER THE FLEXIBILITY TO HAVE A SMALL HIGH USE WATER ZONE IN THE MOST VISIBLE AREAS IN THE FUTURE. THE AREA AROUND THE BUILDING IS SIGNIFICANTLY BELOW 50% OF THE LANDSCAPED AREA.

ALL OTHER PLANTING AREAS AND TREES ARE SUPPORTED BY A HOSE BIB (QUICK COUPLER VALVE) WITHIN 100 FEET.

THE LANDSCAPE CONTRACTOR IS RESPONSIBLE FOR THE ESTABLISHMENT OF ALL PLANT MATERIAL. THIS MAY BE ACCOMPLISHED BY WAY OF A WATER TRUCK OR DRIPLINE IRRIGATION FOR THOSE PLANTING AREAS NOT SUPPORTED BY A PERMANENT IRRIGATION SYSTEM.

PREPARED BY:

ZAMIA DESIGN
Landscape Architecture

3459 NW 13th Avenue
Gainesville, Florida 32605
Ph. 352-373-8220 Fax 866-845-7717
LC 26000252

PREPARED FOR:

MPH HOTELS, INC.

ST. PETERSBURG, FL

PROJECT:

HOLIDAY INN ALACHUA

SHEET TITLE:

IRRIGATION PLANS

PROJECT PHASE:

CITY OF ALACHUA RESUBMITTAL

ISSUE DATE:

DECEMBER 19, 2016

REVISIONS

NO.	DATE	COMMENTS

PROFESSIONAL SEAL:

LAWRENCE E. TEAGUE
FLORIDA: LA0001582

PROJECT NUMBER:

16034.1

DRAWN BY:	CHECKED BY:
ALZ	LET

SHEET NUMBER:

L-3

LANDSCAPE NOTES - GENERAL

GENERAL

MULCH ALL LANDSCAPE AREAS WITH A THREE (3) INCH MINIMUM LAYER OF PINE BARK MULCH EXCEPT IN THE RETENTION AREAS WHERE PINE STRAW IS REQUIRED.

ALL CONSTRUCTION DEBRIS (ASPHALT, LIMEROCK, CONCRETE, MORTAR), EXISTING WEEDS AND GRASSES, AND ANY OTHER FOREIGN MATERIALS SHALL BE REMOVED FROM PLANTING AREAS TO A DEPTH OF THREE (3) FEET.

REQUIRED FILL FOR PLANTING AREAS SHALL BE FLORIDA SOURCED, FREE OF WEED SEEDS, AND HAVE A pH OF 5.5 – 6.5.

OWNER RESPONSIBLE FOR THE SURVIVAL OF ALL PROPOSED, RETAINED, OR RELOCATED TREES FOR ONE (1) YEAR AFTER ISSUANCE OF CERTIFICATE OF OCCUPANCY.

TREE INSTALLATION

ALL PROPOSED CANOPY TREES TO BE A MINIMUM EIGHT (8) FT IN HEIGHT AND TWO (2) INCH CALIPER UNLESS SPECIFIED BY THE LANDSCAPE ARCHITECT.

ALL PROPOSED UNDERSTORY TREES TO BE A MINIMUM SEVEN (7) FT IN HEIGHT AND ONE AND A HALF (1.5) INCH CALIPER UNLESS SPECIFIED BY THE LANDSCAPE ARCHITECT.

ALL PROPOSED TREES TO MAINTAIN A MINIMUM TEN (10) FT SEPARATION FROM UNDERGROUND UTILITY LINES.

ALL TREES IN SOD AREAS TO BE PROTECTED FROM MOWERS AND STRING TRIMMERS BY:

a. A FOUR (4) FOOT MINIMUM MULCH RING AROUND THE TRUNK BASE.
b. A TEN (10) INCH PLASTIC PROTECTOR (CORRUGATED DRAIN PIPE) AROUND THE TRUNK BASE.

TREES SHALL BE PLANTED SO THAT THE TRUNK FLARE IS EXPOSED; THE TOPMOST ROOT SHOULD BE 1 TO 2 INCHES ABOVE THE SURROUNDING GRADE.

TREES TO BE STAKED IF DEEMED NECESSARY. IF STAKED, GUYING TO BE A BIO–DEGRADEBLE MATERIAL. STAKING TO BE REMOVED WITHIN ONE YEAR OF INSTALLATION.

INVASIVE EXOTIC PLANT MATERIAL

ALL INVASIVE EXOTIC SPECIES TO BE REMOVED FROM SITE PRIOR TO ISSUANCE OF THE CERITICATE OF OCCUPANCY.

GRASSING

ALL DISTURBED UNPAVED AREAS SHALL BE GRASSED, MULCHED OR PLANTED. AREAS TO BE TURF GRASS SHALL BE GRADED SMOOTH AND EITHER GRASSED WITH SOD THAT IS CERTIFIED FREE OF NOXIOUS WEEDS OR SEEDED BY A HYDRO–SEED PROCESS OR SEEDED WITH A STRAW MULCH COVER.

BAHIA TURF HAS BEEN SPECIFIED IN SUPPORT OF XERISCAPE PRINCIPLES.

PLANT MATERIAL

ALL PLANT MATERIAL TO BE FLORIDA NO. 1 OR BETTER, GRADED IN ACCORDANCE WITH FLORIDA DIVISION OF PLANT INDUSTRY'S GRADES AND STANDARDS FOR NURSERY PLANTS.

IRRIGATION NOTES

LANDSCAPE IRRIGATION TO BE PROVIDED BY AN AUTOMATIC IRRIGATION SYSTEM IN HIGH USE ZONES

A RAIN SENSOR DEVICE TO BE PROVIDED FOR THE AUTOMATIC SYSTEM.

HOSE BIBS TO SUPPLIED EVERY 100 FEET FOR MODERATE AND LOW USE ZONES FOR ESTABLISHMENT AND TO SUPPLEMENT NATURAL RAIN FALL.

THE IRRIGATION SYSTEM SHALL PROMOTE WATER CONSERVATION BY UTILIZING METHODS SUCH AS DRIP IRRIGATION, EFFICIENT SPRINKLER ZONING, AND REDUCED RUN TIMES AS PLANTS BECOME MORE ESTABLISHED.

BUBBLERS TO BE PROVIDED FOR EACH PROPOSED TREE TO INSURE THE ENTIRE ROOT BALL IS IRRIGATED.

EXISTING TREE SCHEDULES

HERITAGE TREES TO BE REMOVED

THE FOLLOWING IS A LIST OF ALL HERITAGE TREES (30" HARDWOODS) TO BE REMOVED.

MITIGATION IS AT INCH FOR INCH REPLACEMENT OF EACH TREE REMOVED.

COMMON NAME	BOTANICAL NAME	CALIPER	HEALTH	REPLACEMENT TREES	COMMENTS
LIVE OAK	QUERCUS VIRGINIANA	30"	GOOD	15	
LIVE OAK	QUERCUS VIRGINIANA	34"	GOOD	17	
LIVE OAK	QUERCUS VIRGINIANA	38"	EXCELLENT	19	
LIVE OAK	QUERCUS VIRGINIANA	38"	VERY GOOD	19	
LIVE OAK	QUERCUS VIRGINIANA	39"	GOOD	20	

TOTAL MITIGATION FOR HERITAGE TREES 90 TREES (2" CAL)

REGULATED TREES TO BE REMOVED

THE FOLLOWING IS A LIST OF ALL REGULATED TREES (10" HARDWOODS, EXCLUDING HERITAGE) TO BE REMOVED.

MITIGATION IS AT ONE FOR ONE REPLACEMENT OF EACH TREE REMOVED.

COMMON NAME	BOTANICAL NAME	CALIPER	HEALTH	REPLACEMENT TREES	COMMENTS
LAUREL OAK	QUERCUS LAURIFOLIA	13"	POOR	0	TOPPED
LAUREL OAK	QUERCUS LAURIFOLIA	19"	GOOD	1	
LAUREL OAK	QUERCUS LAURIFOLIA	30"	POOR	0	HAZARD
LIVE OAK	QUERCUS VIRGINIANA	11"	GOOD	1	
LIVE OAK	QUERCUS VIRGINIANA	21"	GOOD	1	
LIVE OAK	QUERCUS VIRGINIANA	22"	GOOD	1	
LIVE OAK	QUERCUS VIRGINIANA	22"	GOOD	1	
LIVE OAK	QUERCUS VIRGINIANA	22"	GOOD	1	
LIVE OAK	QUERCUS VIRGINIANA	23"	GOOD	1	
LIVE OAK	QUERCUS VIRGINIANA	24"	GOOD	1	
LIVE OAK	QUERCUS VIRGINIANA	24"	POOR	0	NO CANOPY
LIVE OAK	QUERCUS VIRGINIANA	25"	GOOD	1	
LIVE OAK	QUERCUS VIRGINIANA	25"	POOR	0	NO CANOPY
LIVE OAK	QUERCUS VIRGINIANA	26"	VERY GOOD	1	
LIVE OAK	QUERCUS VIRGINIANA	26"	GOOD	1	
LIVE OAK	QUERCUS VIRGINIANA	26"	GOOD	1	
LIVE OAK	QUERCUS VIRGINIANA	26"	POOR	0	NO CANOPY
LIVE OAK	QUERCUS VIRGINIANA	27"	VERY GOOD	1	
LIVE OAK	QUERCUS VIRGINIANA	29"	VERY GOOD	1	
MAGNOLIA	MAGNOLIA GRANDIFLORA	10"	VERY GOOD	1	
MAGNOLIA	MAGNOLIA GRANDIFLORA	10"	VERY GOOD	1	
MAGNOLIA	MAGNOLIA GRANDIFLORA	10"	GOOD	1	
MAGNOLIA	MAGNOLIA GRANDIFLORA	10"	GOOD	1	
MAGNOLIA	MAGNOLIA GRANDIFLORA	10"	POOR	0	TOPPED
MAGNOLIA	MAGNOLIA GRANDIFLORA	11"	GOOD	1	
MAGNOLIA	MAGNOLIA GRANDIFLORA	12"	VERY GOOD	1	
MAGNOLIA	MAGNOLIA GRANDIFLORA	12"	VERY GOOD	1	
MAGNOLIA	MAGNOLIA GRANDIFLORA	15"	VERY GOOD	1	
SWEETGUM	LIQUIDAMBAR STYRACIFLUA	11"	GOOD	1	
SWEETGUM	LIQUIDAMBAR STYRACIFLUA	11"	GOOD	1	
SWEETGUM	LIQUIDAMBAR STYRACIFLUA	13"	GOOD	1	

TOTAL MITIGATION FOR NON–HERITAGE REGULATED TREES 25 TREES

TOTAL MITIGATION REQUIRED FOR ALL TREES 115 TREES

TOTAL CANOPY TREES PROVIDED FOR MITIGATION 135 TREES

CREDIT FOR TREES TO REMAIN

THE FOLLOWING IS A LIST OF ALL REGULATED AND HERITAGE TREES TO REMAIN.

TREE CREDITS FOR EXISTING TREES PRESERVED PER TABLE 6.2.3.

COMMON NAME	BOTANICAL NAME	CALIPER	HEALTH	PROTECTION CATEGORY	TREE CREDITS
LAUREL OAK	QUERCUS LAURIFOLIA	14"	VERY GOOD	2	3
LAUREL OAK	QUERCUS LAURIFOLIA	17"	GOOD	2	0
LAUREL OAK	QUERCUS LAURIFOLIA	18"	VERY GOOD	2	4
LAUREL OAK	QUERCUS LAURIFOLIA	22"	EXCELLENT	2	4
LAUREL OAK	QUERCUS LAURIFOLIA	27"	GOOD	2	0
LAUREL OAK	QUERCUS LAURIFOLIA	30"	VERY GOOD	1	6
LIVE OAK	QUERCUS VIRGINIANA	38"	VERY GOOD	1	7
MAGNOLIA	MAGNOLIA GRANDIFLORA	10"	VERY GOOD	2	2
MAGNOLIA	MAGNOLIA GRANDIFLORA	11"	VERY GOOD	3	2
SWEETGUM	LIQUIDAMBAR STRACIFLUA	10"	GOOD	2	0
SWEETGUM	LIQUIDAMBAR STRACIFLUA	12"	GOOD	2	0
SWEETGUM	LIQUIDAMBAR STRACIFLUA	18"	VERY GOOD	2	4

TOTAL CREDITS FOR TREE PRESERVATION 32

TREES TO REMAIN - USAGE FOR LANDSCAPE REQUIREMENTS

THE FOLLOWING SHOWS HOW REGULATED AND HERITAGE TREES TO REMAIN ARE USED IN VARIOUS BUFFERS.

COMMON NAME	BOTANICAL NAME	CALIPER	LANDSCAPE USE	CREDITS
LAUREL OAK	QUERCUS LAURIFOLIA	14"	NORTH BUFFER	3
LAUREL OAK	QUERCUS LAURIFOLIA	17"	EAST BUFFER	0
LAUREL OAK	QUERCUS LAURIFOLIA	18"	EAST BUFFER	4
LAUREL OAK	QUERCUS LAURIFOLIA	22"	SOUTH BUFFER	4
LAUREL OAK	QUERCUS LAURIFOLIA	27"	EAST BUFFER	0
LAUREL OAK	QUERCUS LAURIFOLIA	30"	EAST BUFFER	6
LIVE OAK	QUERCUS VIRGINIANA	38"	EAST BUFFER	7
MAGNOLIA	MAGNOLIA GRANDIFLORA	10"	SOUTH BUFFER	2
MAGNOLIA	MAGNOLIA GRANDIFLORA	11"	EAST BUFFER	2
SWEETGUM	LIQUIDAMBAR STRACIFLUA	10"	NORTH BUFFER	0
SWEETGUM	LIQUIDAMBAR STRACIFLUA	12"	NORTH BUFFER	0
SWEETGUM	LIQUIDAMBAR STRACIFLUA	18"	NORTH BUFFER	4

NO CREDITS ARE ACTUALLY USED BECAUSE THE NUMBER OF TREES REQUIRED FOR MITIGATION EXCEEDS THE NUMBER OF LANDSCAPE REQUIREMENT TREES. CREDITS CANNOT BE USED TOWARD MITIGATION.

LANDSCAPE REQUIREMENTS

PARKING LOT – INTERIOR:

TOTAL SQ. FT. OF PARKING 49,530 SF

REQUIREMENT: 1 TREE PER 2,000 SQ FT 25 TREES
10 SHRUBS PER TREE 250 SHRUBS

PROVIDED: 27 TREES
310 SHRUBS

PARKING LOT – BUFFER:

TOTAL LINEAR FT. OF PARKING 650 LF

REQUIREMENT: 4 CANOPY TREES / 100 LF 28 TREES
2 UNDERSTORY TREES / 100 LF 14 TREES
CONTINUOUS SHRUB BUFFER

PROVIDED: 30 CANOPY TREES
14 UNDERSTORY TREES
114 SHRUBS

PERIMETER BUFFERS:

NORTH BUFFER: TYPE D, OPAQUE

ADJACENCY – SINGLE FAMILY DETACHED 325 LF

REQUIREMENT: FENCING + 1 CANOPY TREE / 20 LF 16 TREES

PROVIDED: FENCING + 13 CANOPY + 4 EXISTING TREES
UNDERSTORY TREES 12 TREES

EAST BUFFER: TYPE B, AESTHETIC

ADJACENCY – VACANT, ZONED CI 515 LF

REQ FOR NORTH 122 LF: FENCING + 1 CANOPY TREE/40 LF 3 TREES

PROVIDED: FENCING + 4 CANOPY TREES

REQ FOR SOUTH 393 LF: 1 CANOPY TREE / 50 LF + 8 TREES
1 UNDERSTORY TREE / 40 LF 10 TREES

PROVIDED: 9 CANOPY + 6 EXISTING + 10 UNDERSTORY TREES

SOUTH BUFFER: TYPE B, AESTHETIC

ADJACENCY – VACANT, ZONED CI 415 LF

REQUIREMENT: 1 CANOPY TREE / 50 LF + 8 TREES
1 UNDERSTORY TREE / 40 LF 10 TREES

PROVIDED: 8 CANOPY + 2 EXISTING TREES +
10 UNDERSTORY TREES

WEST BUFFER: TYPE C, SEMI–OPAQUE

ADJACENCY – VACANT, PLANNED HEALTH CARE 398 LF

REQUIREMENT: 1 CANOPY TREE / 30 LF + 13 TREES
CONTINUOUS SHRUB BUFFER

PROVIDED: 13 CANOPY TREES +
96 SHRUBS

SOUTHWEST BUFFER: STREET BUFFER

LENGTH 130 LF

REQUIREMENT: 5 CANOPY TREE / 100 LF + 7 TREES
3 UNDERSTORY TREE / 100LF + 4 TREES
CONTINUOUS SHRUB BUFFER

PROVIDED: 7 CANOPY TREES
5 UNDERSTORY TREES
37 SHRUBS

FACADE LANDSCAPE STANDARDS

FRONT FACADE: 3 CANOPY TREES / AC (4.2) 13 TREES
4 CANOPY TREES / 100 LF (4 x 2.47) 10 TREES
6 ORNAMENTAL TREES / AC (4.2) X 50% 13 TREES

PROVIDED: 2 CANOPY AND 7 ORNAMENTAL – SEEN NOTE BELOW

SIDE FACADES: 2 CANOPY TREES / AC (4.2) 8 TREES
4 CANOPY TREES / 100 LF (4 x 0.61) 3 TREES
6 ORNAMENTAL TREES / AC (4.2) X 25% 6 TREES

PROVIDED: 4 CANOPY AND 6 ORNAMENTAL – SEEN NOTE BELOW

REAR FACADE: 2 CANOPY TREES / AC (4.2) 8 TREES
4 CANOPY TREES / 100 LF (4 x 0.61) 3 TREES

PROVIDED: 14 CANOPY + 4 EXISTING
ADDITIONAL TREES TO MEET THE 6.6.3 RESIDENTIAL PROTECTION STANDARDS

NOTE: ALTERNATIVE PLACEMENT PER 6.2.2 (D)(d). IN CASES WHERE CONFIGURATION CONSTRAINTS MAKE PLACEMENT OF LANDSCAPING IMPRACTICAL, UP TO 50% OF THE REQUIRED LANDSCAPING MAY BE RELOCATED. EXCESS TREES HAVE BEEN LOCATED IN THE BASIN AREA TO MEET THE FACADE STANDARDS:

35 ADDITIONAL CANOPY + 6 ADDITIONAL ORNAMENTAL TREES

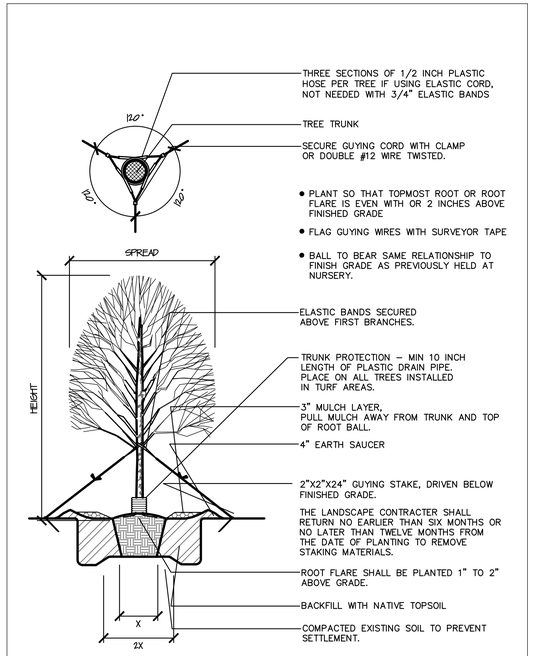

1 TREE PLANTING DETAIL
NTS

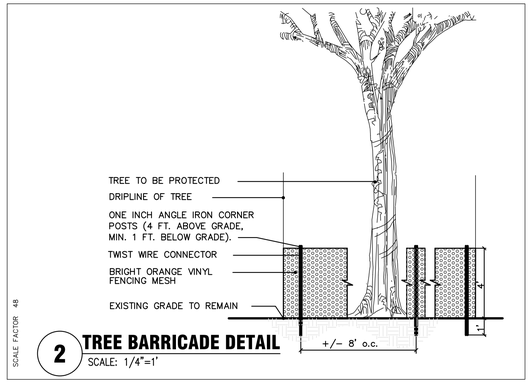

2 TREE BARRICADE DETAIL
SCALE: 1/4"=1'

TREE PROTECTION NOTES

PLACE A TREE PROTECTION BARRIER AROUND ALL REGULATED TREES TO REMAIN THAT ARE WITHIN FIFTY (50) FEET OF ANY CONSTRUCTION ACTIVITY OR CONSTRUCTION STORAGE AREA.

TREE BARRIERS SHALL BE PLAINLY VISIBLE AND SHALL CREATE A CONTINUOUS BOUNDARY TO PROTECT AGAINST THE ENCROACHMENT OF MACHINERY, MATERIALS AND VEHICLES. NO EQUIPMENT, MATERIALS, SUPPLIES, FUELS OR CHEMICALS SHALL BE STORED WITHIN THE TREE BARRICADE AREA AT ANY TIME.

TREE BARRIERS TO BE PLACED AT OR OUTSIDE THE DRIPLINE OF HERITAGE AND CHAMPION TREES, REGULATED PINE AND PALM TREES. FOR ALL OTHER REGULATED TREES TO REMAIN, THE BARRIER SHALL BE PLACED AT TWO–THIRDS OF THE DRIPLINE.

NO GRADE CHANGE SHALL BE MADE WITHIN THE BARRIER ZONE WITHOUT PRIOR APPROVAL OF THE CITY MANAGER OR DESIGNEE.

TREE BARRIERS SHALL REMAIN IN PLACE UNTIL MAJOR CONSTRUCTION ACTIVITIES ARE COMPLETED AND LANDSCAPE INSTALLATION BEGINS. LANDSCAPE PREPARATION WITHIN THE PROTECTION ZONE IS LIMITED TO SHALLOW DISKING (NO DEEPER THAN FOUR (4) INCHES) UNLESS OTHERWISE APPROVED BY CITY MANAGER.

PLACE AN EIGHT (8) INCH THICK LAYER OF MULCH WITHIN THE TREE BARRIER AREA.

TREE ROOTS IN EXCESS OF ONE (1) INCH THAT ARE DAMAGED OR EXPOSED SHALL BE CUT BE CUT CLEANLY AND RECOVERED WITH SOIL WITHIN ONE HOUR OF THE DAMAGE.

SEE THE STANDARD TREE PROTECTION BARRIER FOR REGULATED TREES AND NON–HIGH QUALITY HERITAGE TREES AT 2 / L–3. BARRIER TO BE A MINIMUM FOUR (4) FEET TALL AND CONSTRUCTED WITH:

a. 2x4 CORNERS AND TWO (2) COURSES OF 1x4 WOOD SLATS WITH COLORED FLAGGING OR COLORED PLASTIC MESH FENCING ATTACHED OR
b. ANGLE IRON CORNER POSTS WITH COLORED MESH CONSTRUCTION FENCING ATTACHED.

PREPARED BY:

ZAMIA DESIGN
Landscape Architecture

3459 NW 13th Avenue
Gainesville, Florida 32605
Ph. 352–373–8220 Fax 866–845–7717
LC 26000252

PREPARED FOR:

MPH HOTELS, INC.

ST. PETERSBURG, FL

PROJECT:

HOLIDAY INN ALACHUA

SHEET TITLE:

TABLES, NOTES and DETAILS

PROJECT PHASE:

CITY OF ALACHUA RESUBMITTAL

ISSUE DATE:

DECEMBER 19, 2016

REVISIONS

NO.	DATE	COMMENTS

PROFESSIONAL SEAL:

LAWRENCE E. TEAGUE
FLORIDA: LA0001582

PROJECT NUMBER:

16034.1

DRAWN BY:	CHECKED BY:
ALZ	LET

SHEET NUMBER:

L-4

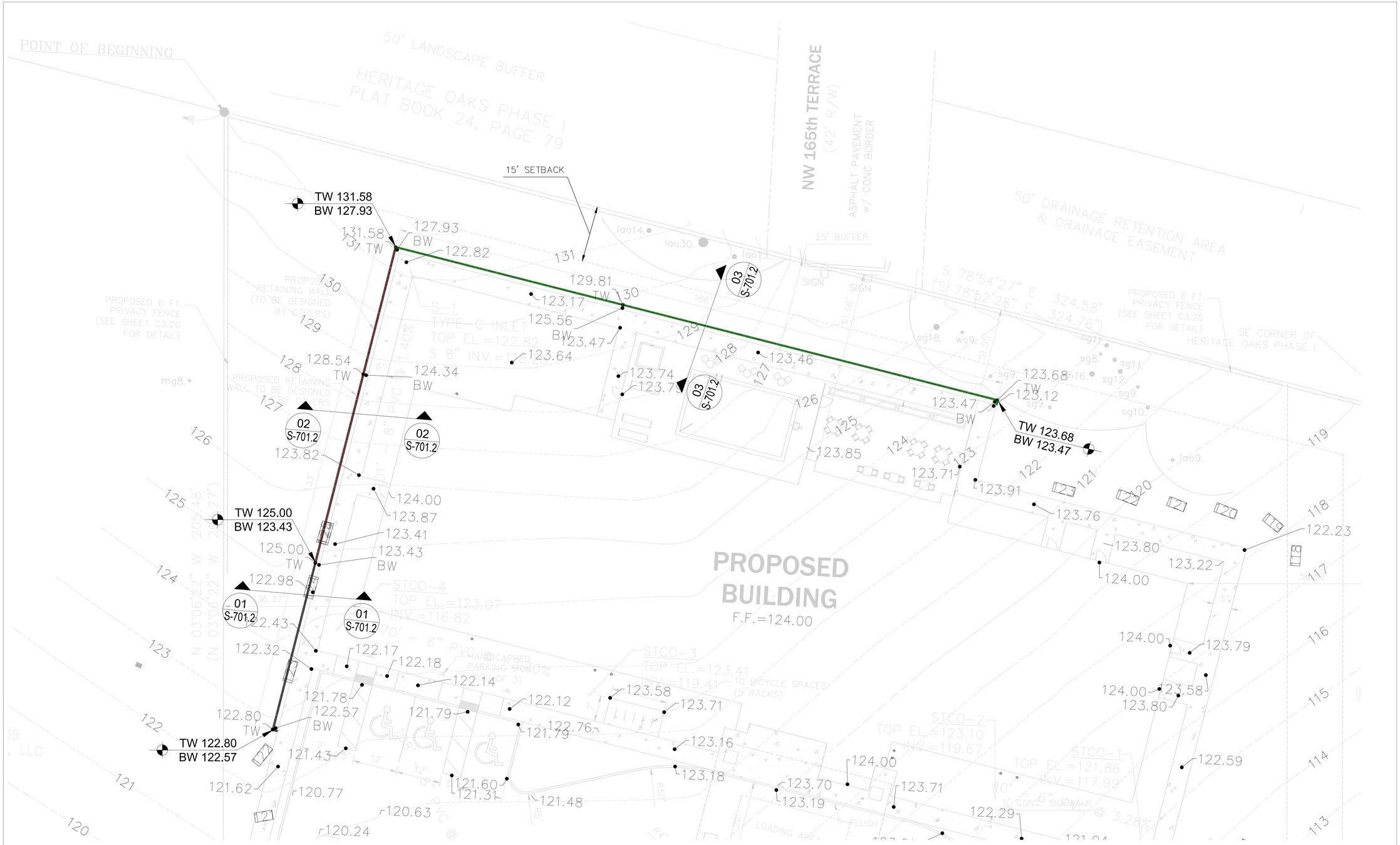

RETAINING WALL FOUNDATION PLAN

SCALE: 1/8"=1'-0"

STRUCTURAL NOTES

CONCRETE NOTES:

NORMAL WEIGHT CONCRETE (145 PCF) 28-DAY COMPRESSIVE STRENGTH: 3000PSI

MINIMUM CONCRETE COVER SHALL BE:
- EXPOSED UNPROTECTED CONCRETE - 1-1/2"
- FORMED CONCRETE BELOW GRADE - 2"
- UNFORMED CONCRETE BELOW GRADE - 3"

PLACING DRAWINGS AND BAR LISTS SHALL CONFORM TO A.C.I.'S "MANUAL OF STANDARD PRACTICE FOR DETAILING REINFORCED CONCRETE STRUCTURES." (A.C.I. 315-80)

DETAILS OF CONCRETE REINFORCEMENT SHALL BE IN ACCORDANCE WITH "THE MANUAL OF STANDARD PRACTICE FOR REINFORCED CONCRETE CONSTRUCTION" AS PUBLISHED BY THE CONCRETE REINFORCING STEEL INSTITUTE UNLESS OTHERWISE INDICATED.

CONCRETE CONSTRUCTION TECHNIQUES SHALL CONFORM TO THE "SPECIFICATIONS FOR STRUCTURAL CONCRETE FOR BUILDINGS" (ACI 301-84).

REINFORCEMENT SHALL BE CAREFULLY PLACED, RIGIDLY SUPPORTED AND WELL TIED WITH BAR SUPPORTS AND SPACERS.

ADEQUATE VERTICAL AND HORIZONTAL SHORING SHALL BE PROVIDED TO SAFELY SUPPORT ALL CONSTRUCTION LOADS.

DOWEL COLUMN AND WALL REINFORCING TO FOOTING WITH SAME SIZE AND NUMBER OF DOWELS AS VERTICAL BARS ABOVE.

DOWELS SHALL BE HOOKED "L" AT BOTTOM AND SHALL BE LAPPED 48 BAR DIAMETER WITH THE COLUMN OR WALL REINFORCING ABOVE.

FOOTING DESIGNED FOR 4000 PSF BEARING CAPACITY BY RATIONAL ANALYSIS

MASONRY NOTES:

ALL BLOCK WALLS SHALL BE TWO-CELL HOLLOW CONCRETE MASONRY REGULAR SIZE BLOCK MANUFACTURED IN CONFORMANCE WITH ASTM C-90, GRADE N, F'm=1900 PSI.

REINFORCING STEEL SHALL BE GRADE 60 U.O.N.

BLOCK SHALL BE PLACED IN RUNNING BOND UNLESS OTHERWISE NOTED. LAY UP MASONRY WALLS TO BOTTOM OF TIE BEAMS BEFORE PLACING CONCRETE FOR IN WALL COLUMNS.

GROUT USED TO FILL MASONRY CELLS SHALL COMPLY WITH ASTM C-476 AND SHALL PROVIDE A MINIMUM COMPRESSIVE STRENGTH OF 3,000 PSI AT 28 DAYS. THE GROUT MIX SHALL HAVE A MAXIMUM 3/8" COURSE AGGREGATE AND SHALL BE PLACED WITH A SLUMP OF 8" TO 10". USE ONLY MECHANICAL VIBRATION TO CONSOLIDATE GROUT.

TYPE S MORTAR SHALL BE USED EXCLUSIVELY ON THIS PROJECT. MORTAR SHALL BE PROPORTIONED AND MIXED AS OUTLINED UNDER ASTM C-270. HORIZONTAL AND VERTICAL MORTAR JOINTS SHALL BE 3/8" THICK UNLESS OTHERWISE NOTED. REMOVE MORTAR PROTRUSIONS THAT EXTEND INTO THE CELLS TO BE FILLED. ALLOW A MINIMUM OF 24 HOURS FOR MORTAR TO CURE PRIOR TO GROUTING CELLS.

STRUCTURAL DESIGN IS IN ACCORDANCE WITH A.C.I.530, BUILDING CODE REQUIREMENTS FOR MASONRY STRUCTURES AND THE COMMENTARY ON BUILDING CODE REQUIREMENTS FOR MASONRY STRUCTURES.

BASE4

BASE4
9858 GLADES ROAD, #237
BOCA RATON, FLORIDA 33434
1.720.72BASE4
www.base-4.com

JEFF GAITHER, AIA
4101 Woodlynne Ln
Orlando, FL 32812

Seal:

ADAM J. GINSBURG
NO. 51199
STATE OF FLORIDA
PROFESSIONAL ENGINEER

ADAM GINSBURG, PE
12041 YARDLEY DRIVE
BOCA RATON, FL 33428

Owner:

MPH HOTELS

MPH Hotels
100 2nd Avenue South
Suite 1103-S, St. Petersburg,
FL 33701

Holiday Inn Express & Suites

FRANCHISE NAME
CITY STATE

NO.	ISSUED	PROJECT STATUS

DATE	2016.12.02
DRAWN BY	SSB
CHECKED BY	AJG
PROJECT NO.	B4-093-1602
SHEET NAME	

RETAINING WALL FOUNDATION PLAN

DRAWINGS NO.

S-701.1

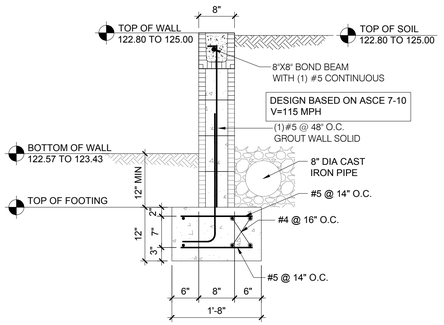

SECTION 01 (S-701.1/S-701.2)
SCALE 3/4"=1'-0"

NOTE:
- FOUNDATION SIZE AND REINFORCEMENT BASED ON ALLOWABLE SOIL PRESSURE= 4000 PSF.
- ALL ELEVATIONS ARE BASED ON GRADING PLAN PROVIDED BY CIVIL ENGINEER.
- PROVIDE CONTROL JOINTS IN MASONRY WALL AT 25'-0" O.C.

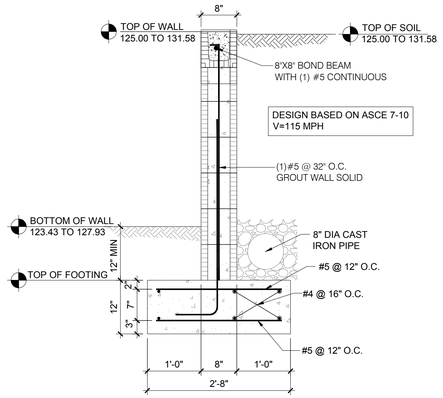

SECTION 02 (S-701.1/S-701.2)
SCALE 3/4"=1'-0"

NOTE:
- FOUNDATION SIZE AND REINFORCEMENT BASED ON ALLOWABLE SOIL PRESSURE= 4000 PSF.
- ALL ELEVATIONS ARE BASED ON GRADING PLAN PROVIDED BY CIVIL ENGINEER.
- PROVIDE CONTROL JOINTS IN MASONRY WALL AT 25'-0" O.C.

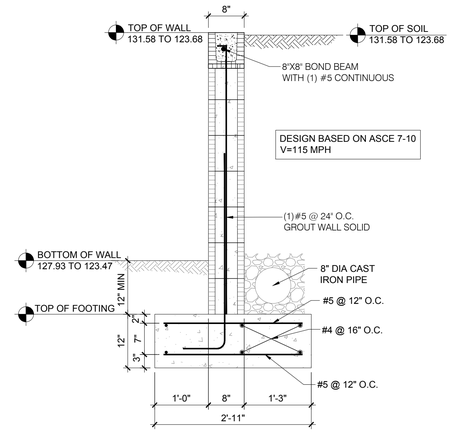

SECTION 03 (S-701.1/S-701.2)
SCALE 3/4"=1'-0"

NOTE:
- FOUNDATION SIZE AND REINFORCEMENT BASED ON ALLOWABLE SOIL PRESSURE= 4000 PSF.
- ALL ELEVATIONS ARE BASED ON GRADING PLAN PROVIDED BY CIVIL ENGINEER.
- PROVIDE CONTROL JOINTS IN MASONRY WALL AT 25'-0" O.C.

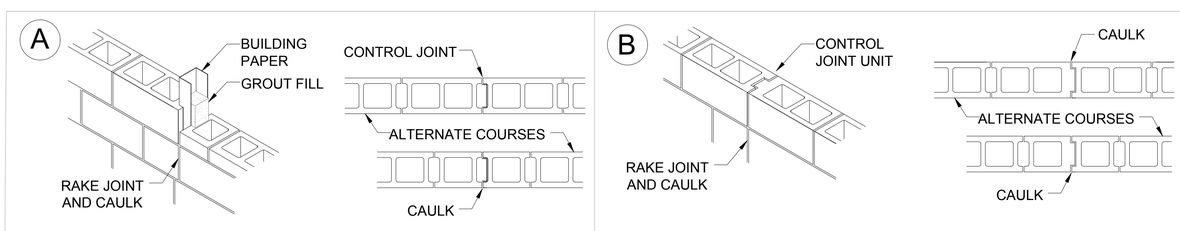

NOTE: USE ELASTOMERIC SEALANT GRADE NS, CLASS 25,

TYP.CMU CONTROL JOINT
SCALE ½"=1'-0"

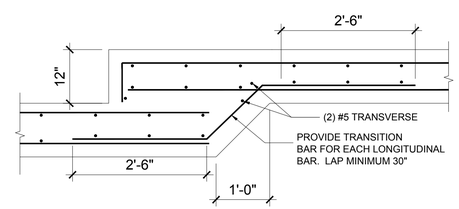

STEMWALL FOOTING STEP DETAIL
SCALE 3/4"=1'-0"

BASE4
9858 GLADES ROAD, #237
BOCA RATON, FLORIDA 33434
1.720.72BASE4
www.base-4.com

JEFF GAITHER, AIA
4101 Woodlynne Ln
Orlando, FL 32812

Seal:

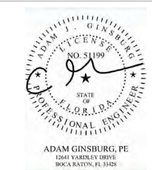

Owner:

MPH Hotels
100 2nd Avenue South
Suite 1103-S, St. Petersburg,
FL 33701

FRANCHISE NAME
CITY STATE

NO.	ISSUED	PROJECT STATUS

DATE	2016.12.02
DRAWN BY	SSB
CHECKED BY	AJG
PROJECT NO.	B4-093-1602

SHEET NAME

RETAINING WALL SECTIONS

DRAWINGS NO.

S-701.2

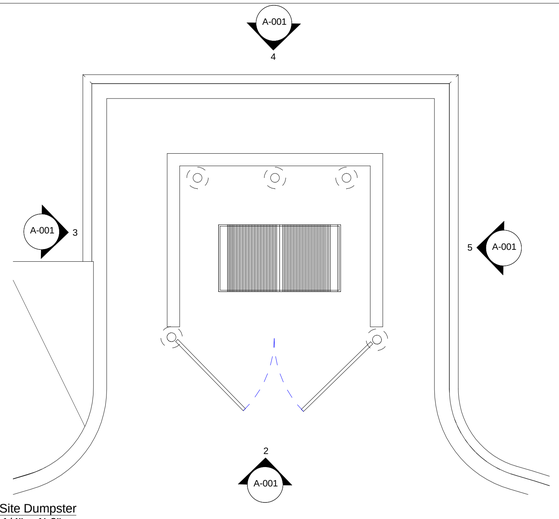

1 A-001 Site Dumpster
1/4" = 1'-0"

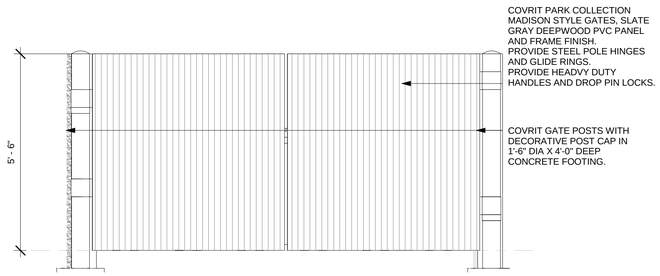

2 A-001 Elevation 6 - a
1/2" = 1'-0"

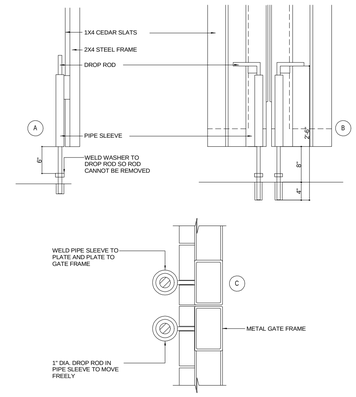

6 A-001 Drop rod @ Dumpster Gate
3/4" = 1'-0"

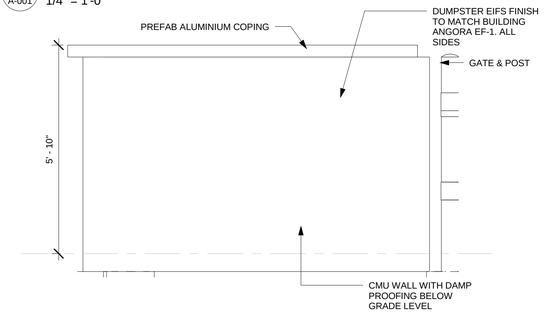

3 A-001 Elevation 5 - a
1/2" = 1'-0"

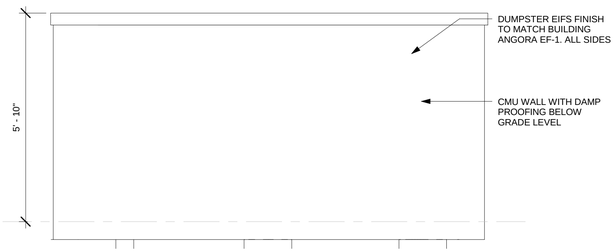

4 A-001 Elevation 7 - a
1/2" = 1'-0"

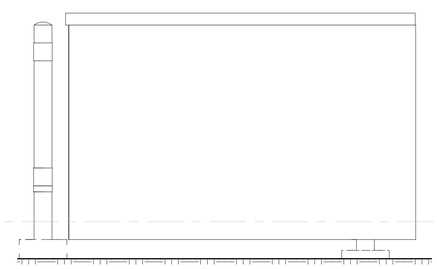

5 A-001 Elevation 8 - a
1/2" = 1'-0"

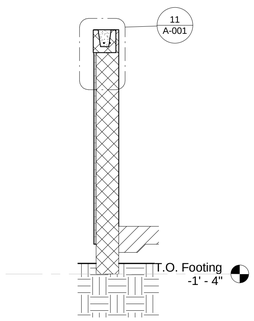

13 A-001 Section 20
1/2" = 1'-0"

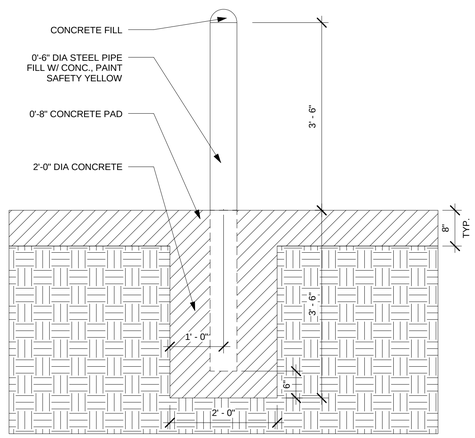

7 A-001 BOLLARD DETAIL
3/4" = 1'-0"

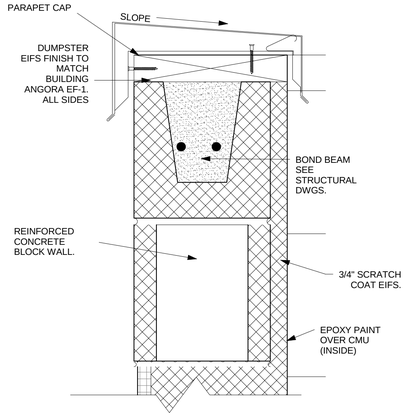

11 A-001 DUMPSTER WALL SECTION DETAIL
3" = 1'-0"

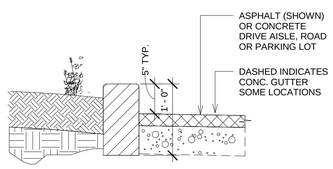

8 A-001 PORTE COCHERE PAVING
1" = 1'-0"

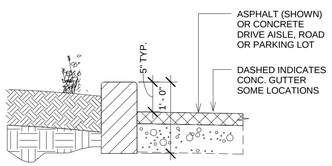

9 A-001 PORTE COCHERE PAVING1
1" = 1'-0"

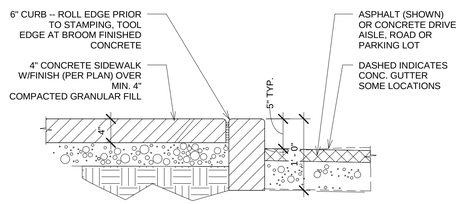

10 A-001 PORTE COCHERE PAVING 2
1" = 1'-0"

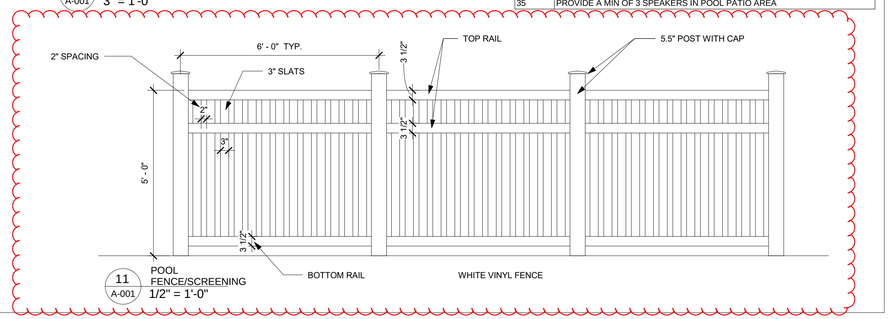

11 A-001 POOL FENCE/SCREENING
1/2" = 1'-0"

GENERAL NOTES-SITE PLAN

GENERAL NOTES:

1. ALL SITE PLAN INFORMATION IS BASED ON TOPOGRAPHIC SURVEY PREPARED BY CIVIL ENGINEER. SEE COVER SHEET FOR CONTACT INFORMATION
2. REFER TO CIVIL ENGINEERING DRAWINGS FOR ADDITIONAL INFORMATION PERTAINING TO DRAINAGE DESIGN, CURB CUTS, PAVING, AND PARKING LOT DIMENSIONS.
3. CONTRACTOR SHALL COORDINATE, PRIOR TO THE COMMENCEMENT OF SITE WORK, THE FINISH FLOOR ELEVATION WITH THE CIVIL ENGINEER AND THE STRUCTURAL ENGINEER.
4. SHOULD FIELD CONDITIONS DIFFER FROM PLANS TO THE EXTENT UNNECESSARY COSTS ARE INCURRED OR DELAYS ARE ANTICIPATED, THE OWNER AND ARCHITECT SHALL BE CONSULTED. THE ARCHITECT, IN CONJUNCTION WITH THE OWNER, WILL DETERMINE THE RESOLUTION.
5. PRIOR TO CONSTRUCTION GENERAL CONTRACTOR SHALL VERIFY ALL ITEMS SHOWN AS EXISTING ON THESE DRAWINGS AND NOTIFY THIS OFFICE OF ANY DISCREPANCIES
6. CONTRACTOR MUST TAKE PRECAUTIONS TO PROTECT OWNER'S PROPERTY FROM CONSTRUCTION OPERATIONS. BOUNDARY OF CONTRACTOR'S WORK AND STORAGE AREAS WILL BE DEFINED TO MUTUAL AGREEMENT BY CONFERENCE
7. LIMITS OF CONSTRUCTION TO BE AREA WITHIN PROPERTY LINE OR AS INDICATED WITH LIMIT LINES OF CONSTRUCTION.
8. G.C. TO FOLLOW THE MINIMUM REQUIREMENTS FOR PAVEMENT DESIGN RECOMMENDATION WALL UNO PER CIVIL DRAWINGS AND SOIL REPORT.
9. GENERAL CONTRACTOR TO PROVIDE PAINTED STRIPING, WORDING, DIRECTIONAL ARROWS AND SYMBOLS IN ACCORDANCE WITH SPECIFICATIONS, NATIONAL AND LOCAL CODES.
10. ALL CONCRETE WALKS ARE 5'-0" WIDE AND TO HAVE NON-SLIP BROOM FINISH WITH 1/2" EXPANSION JOINT @ EVERY 25'-0" O.C.
11. ALL ACCESSIBLE ROUTES SHALL COMPLY WITH ADA GUIDELINES.
12. ALL EXTERIOR SIGNAGE SHALL BE AS DIRECTED BY OWNER (EXCEPT AS DETAILED WITHIN THESE CONSTRUCTION DOCUMENTS) AND IN COMPLIANCE WITH ADA GUIDELINES AND LOCAL CODES. GENERAL CONTRACTOR TO PROVIDE ELECTRICAL CONDUIT & POWER. SIGNAGE & FOUNDATION ARE O.F.O.I.
13. COORDINATE EXTERIOR UTILITY LOCATIONS W/ CIVIL ENGINEERING DWGS & WITH UTILITY COMPANIES PRIOR TO COMMENCEMENT OF CONSTRUCTION
14. GENERAL CONTRACTOR TO ENSURE GAS METER PROTECTION WITH STEEL BOLLARDS AS REQUIRED BY LOCAL UTILITY JURISDICTION & CODE REQUIREMENTS
15. ALL ROOF DRAINS TO TIE INTO STORM DRAINAGE SYSTEM (SEE CIVIL)
16. REFER TO CIVIL ENGINEERING DRAWINGS FOR SITE CONSTRUCTION DETAILS, INCLUDING CURB AND GUTTER DETAILS AND RADII.
17. LANDSCAPE DESIGN IS NOT INCLUDED WITHIN THE SCOPE OF WORK REPRESENTED IN THESE DRAWINGS.
18. EACH ACCESSIBLE PARKING SHALL BE POSTED W/ PERMANENT SIGN BEARING THE INTERNATIONAL SYMBOL OF ACCESSIBILITY AND THE CAPTION "PARKING BY DISABLED PERMIT ONLY" AND ANY OTHER INFORMATION THAT MAY BE REQUIRED LOCALLY.

PROJECT NOTES

1. ENTRY VESTIBULE DOORS AND SIDE AUXILIARY DOOR

2. CLEAR AREA AT DOORS, RAMP AND LANDINGS SHALL BE LEVEL OR AT 2% MAX. SLOPE.

3. MAXIMUM SLOPE AT PATH OF TRAVEL SHALL BE 1:20 WITH MAX. CROSS SLOPE AT 1:50.

4. SEE CIVIL DRAWINGS FOR ADDITIONAL SITE INFORMATION.

5. OUTDOOR POOL RECREATION EQUIPMENT: WATER SLIDES AND WATER PARKS ARE ONLY ALLOWES UPON SUCCESSFULLY FULFILLING THE ONLINE WAIVER REQUEST PROCESS AND UPON MEETING ALL IHG REQUIREMENTS FOR WATER SLIDE/WATER PARK EQUIPMENT. DIVING EQUIPMENT OF ANY KIND IS PROHIBITED. GO TO www.ihgmerlin.com, SELECT THE APPLICATIONS TAB AND SELECT QUALITY EVALUATION MANAGER (QEM). SUBMIT DIMENSIONED PLANS AND EQUIPMENT LIST FOR DESIGN REVIEW. DESIGN APPROVAL IS REQUIRED PRIOR TO COMPLETION OF THE WAIVER REQUEST PROCESS.

KEYNOTES-SITE PLAN KEYNOTES

Tag	Text
1	PORTE COHERE
2	PROPOSED TRANSFORMER LOCATION. FINAL PLACEMENT BY F.P.L
3	6" CONCRETE CURB
5	6'-0" HIGH POOL PERIMETER FENCE AND SELF CLOSING, CHILD PROOF, SELF-LATCHING 3'-0" WIDE GATE. PROVIDE LANDSCAPING AROUND POOL FENCE. CHILD PROOF LOCK AT GATE TO BE MOUNTED 48" AFL MIN.
6	PROPERTY LINES
7	PROPERTY SET BACK LINES
8	MONUMENT SIGN
9	FLAG POLE
10	DUMPSTER
11	POOL
12	HANDICAP PARKING SIGN
14	ADA SIGNAGE
15	24'-0" DRIVE AISLE
16	HEAVY DUTY CONCRTETE APRON AT DUMPSTER
17	DROP OFF CANOPY ABOVE
18	DECORATIVE CONCRETE PAVERS
19	LANDSCAPE BUFFER
21	BOLLARDS IN DUMPSTER
23	HANDICAP RAMP, SEE CIVIL
25	CLEAR ACCESS AISLE ADJACENT TO ACCESSIBLE PARKING SPACE-DROP OFF AND ACCESS AISLE SHALL BE AT THE SAME LEVEL AND SHALL HAVE A SLOPE NOT TO EXCEED 1:48
30	SPA
31	PATIO
32	EXTERIOR SCONCE
35	PROVIDE A MIN OF 3 SPEAKERS IN POOL PATIO AREA

BASE4
9858 GLADES ROAD, #237
BOCA RATON, FLORIDA 33434
1.720.72BASE4 www.base-4.com

RICK MUNIZ, AIA
1025 NW 31ST AVE
POMPANO BEACH, FL 33069

Seal:

Owner:

RANDY GIBBONS
MPH Hotels
100 2nd Avenue South
St. Petersburg, FL 33701
T 727.289.3844

Holiday Inn Express & Suites
Alachua, FL

No.	ISSUED	PROJECT STATUS

DATE	2016.11.15
DRAWN BY	KRN
CHECKED BY	NBL
PROJECT NO.	B4-093-1602

SHEET NAME

DUMPSTER/SITE DETAILS

DRAWINGS NO.

A-001

ISSUED FOR PERMIT

ROOM MATRIX

Name	Count
1ST FLOOR	
GUESTROOM ACC KING X WIDE WITH RIS	1
GUESTROOM KING	2
GUESTROOM KING CONNECT	1
GUESTROOM KING SUITE	2
GUESTROOM QQ	2
2ND FLOOR	
GUESTROOM KING CONNECT	2
GUESTROOM KING SUITE	2
GUESTROOM KING X WIDE ACCESS	1
GUESTROOM QQ	16
GUESTROOM QQ ACCESS	1
GUESTROOM QQ SUITE	5
GUESTROOM QQ WIDE	1
3RD FLOOR	
GUESTROOM KING	1
GUESTROOM KING CONNECT	1
GUESTROOM KING SUITE	2
GUESTROOM KING X WIDE	1
GUESTROOM QQ	16
GUESTROOM QQ ACCESS	1
GUESTROOM QQ SUITE	5
GUESTROOM QQ WIDE	1
4TH FLOOR	
GUESTROOM KING	2
GUESTROOM KING CONNECT	2
GUESTROOM KING SUITE	2
GUESTROOM KING SUITE ACCESS	1
GUESTROOM KING X WIDE	1
GUESTROOM QQ	14
GUESTROOM QQ SUITE	5
GUESTROOM QQ WIDE	1
Grand total: 92	92

Table 9.1.2

	Column "A"	Column "B"
Total Rooms in Facility	Accessible Rooms	Rooms with Roll-in-Shower
1 to 25	1	0
26 to 50	2	0
51 to 75	3	1
76 to 100	4	1
101 to 150	5	2
151 to 200	6	2
201 to 300	7	3
301 to 400	8	4
401 to 500	9	See Below*
501 to 1000	2% of Total rooms	See Below*
1001+	20+ (1 Per 100 over 1000)	See Below*

Note: The Number of accessible guestrooms for a given number of rooms in a hotel (Left column) is derived by adding together Column "A" and Column "B".

* the number of Roll-in-shower rooms in hotels with more than 400 guestrooms total equals 4+ (1 per 100 rooms over 400).

TOTAL NUMBER OF GUEST ROOMS PROVIDED	MINIMUM NUMBER OF REQUIRED GUEST ROOMS WITH COMMUNICATION FEATURES
2 TO 25	2
26 TO 50	4
50 TO 75	7
76 TO 100	9
101 TO 150	12
151 TO 200	14
201 TO 300	17
301 TO 400	20
401 TO 500	22
501 TO 1000	5 PERCENT OF TOTAL
1001 AND OVER	50, PLUS 3 FOR EACH 100 OVER 1000

KEYNOTE FLOOR PLAN

Tag	Description
1	MEDIA WALL
2	MIRROR WALL
3	TV BUILT INTO SLATED WALL
5	RAISED CONCRETE WASHER SLAB WITH TROUGH
6	LOCATED FIRE READ OUT PANEL BEFIND CHECK IN DESK
7	ALIGN DOOR WITH CORRIDOR WALL
8	ADD COURT HOOK TO INSIDE OF ALL RESTROOM DOORS
9	TV IS MOUNTED TO WALL .G.C TO PROVIDE BACKING IN WALL
10	WINDOWS TO BE VENTABLE
11	6'X2' TRASH CONSOLE
29	METAL STUD WALL SEE WALL PARTITION DETAILS

GENERAL FLOOR PLAN NOTES

BASE4 NOTES

1. WHERE FLOOR FINISH CHANGES FROM ONE ROOM TO ANOTHER, SET JOINT OF THE FLOOR MATERIALS AT THE CENTER OF THE COMMUNICATING DOOR.
2. CERAMIC TILE/QUARRY TILE TO BE INSTALLED SO CUT TILES ARE NOT LESS THAN HALF OF A TILE.
3. ALL DIMENSION ARE FROM THE FACE OF STUD UNLESS NOTED OTHERWISE.
4. INTERIOR DOORS TO BE MIN. OF 4" FROM ADJACENT WALLS AS SHOWN ON PLANS.
5. PROVIDE MASONRY CONTROL JOINTS IN EXTERIOR CMU WALLS.
6. GYPSUM WALLBOARD CONTROL JOINTS TO BE 30'-0" MAX O.C. AND AT DOOR JAMBS FROM HEAD TO TERMINATION OF GYPSUM WALLBOARD.
7. PROVIDE ACCESS PANELS AS REQUIRED. (SEE ENGINEERING DRAWINGS)
8. G.C TO PROVIDE BLOCKING FOR ALL ACCESSORIES,BUILDING ITEMS,AND OWNER FF&E ITEMS THAT ARE WALL OR CEILING MOUNTED.
9. ALL EXERCISE EQUIPMENT IS OFOI.
10. GUEST ROOMS WITH "COMMUNICATION FEATURES" SHALL COMPLY WITH 806.3 OF THE 2010 ADA STANDARDS FOR ACCESSIBLE DESIGN. SEE ELECTRICAL FOR DEVICE REQUIREMENTS.
11. SEE INTERIOR DESIGN FOR ALL ACTUAL FINISHES, FURNITURE SIZES AND APPLICABLE DETAILS
12. SEE ID DRAWINGS TO COORDINATE ALL BLOCKING IN WALLS
13. BABY CHANGING STATION IN ALL RESTROOM.

PROJECT NOTES

1. REFER TO ENGINEERING DRAWINGS FOR FIXTURE TYPES AND SPECIFICATIONS
2. REFER TO ARCHITECTURAL FINISH MANUAL FOR FINISH SPECIFICATIONS
3. REFER TO FINISH SCHEDULE FOR TYP. ROOM FINISHES.

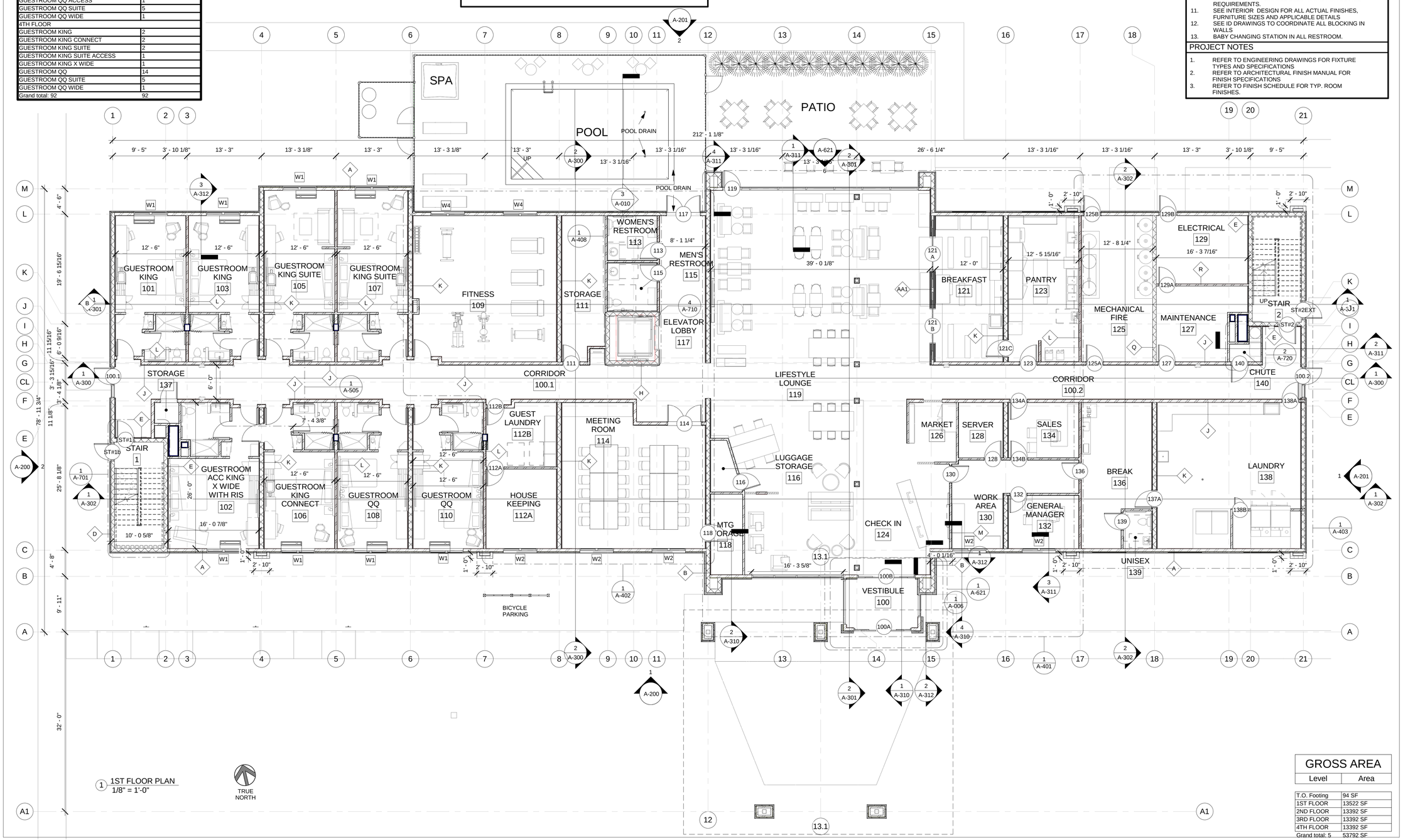

1 1ST FLOOR PLAN
1/8" = 1'-0"

GROSS AREA

Level	Area
T.O. Footing	94 SF
1ST FLOOR	13522 SF
2ND FLOOR	13392 SF
3RD FLOOR	13392 SF
4TH FLOOR	13392 SF
Grand total: 5	53792 SF

BASE4
9858 GLADES ROAD, #237
BOCA RATON, FLORIDA 33434
1.720.72BASE4 www.base-4.com

RICK MUNIZ, AIA
1025 NW 31ST AVE
POMPANO BEACH, FL 33069

Seal:

Owner:

RANDY GIBBONS
MPH Hotels
100 2nd Avenue South
St. Petersburg, FL 33701
T 727.289.3844

Holiday Inn Express & Suites
Alachua, FL

No.	ISSUED	PROJECT STATUS

DATE	2016.12.02
DRAWN BY	KRN
CHECKED BY	NBL
PROJECT NO.	B4-093-1602
SHEET NAME	

1ST FLOOR PLAN

DRAWINGS NO.

A-101

ISSUED FOR PERMIT

ROOM MATRIX

Name	Count
1ST FLOOR	
GUESTROOM ACC KING X WIDE WITH RIS	1
GUESTROOM KING	2
GUESTROOM KING CONNECT	1
GUESTROOM KING SUITE	2
GUESTROOM QQ	2
2ND FLOOR	
GUESTROOM KING CONNECT	2
GUESTROOM KING SUITE	2
GUESTROOM KING X WIDE ACCESS	1
GUESTROOM QQ	16
GUESTROOM QQ ACCESS	1
GUESTROOM QQ SUITE	5
GUESTROOM QQ WIDE	1
3RD FLOOR	
GUESTROOM KING	1
GUESTROOM KING CONNECT	1
GUESTROOM KING SUITE	2
GUESTROOM KING X WIDE	1
GUESTROOM QQ	16
GUESTROOM QQ ACCESS	1
GUESTROOM QQ SUITE	5
GUESTROOM QQ WIDE	1
4TH FLOOR	
GUESTROOM KING	2
GUESTROOM KING CONNECT	2
GUESTROOM KING SUITE	2
GUESTROOM KING SUITE ACCESS	1
GUESTROOM KING X WIDE	1
GUESTROOM QQ	14
GUESTROOM QQ SUITE	5
GUESTROOM QQ WIDE	1
Grand total: 92	92

Table 9.1.2

	Column "A"	Column "B"
Total Rooms in Facility	Accessible Rooms	Rooms with Roll-in-Shower
1 to 25	1	0
26 to 50	2	0
51 to 75	3	1
76 to 100	4	1
101 to 150	5	2
151 to 200	6	2
201 to 300	7	3
301 to 400	8	4
401 to 500	9	See Below*
501 to 1000	2% of Total rooms	See Below*
1001+	20+ (1 Per 100 over 1000)	See Below*

Note: The Number of accessible guestrooms for a given number of rooms in a hotel (Left column) is derived by adding together Column "A" and Column "B".

* the number of Roll-in-shower rooms in hotels with more than 400 guestrooms total equals 4+ (1 per 100 rooms over 400).

TOTAL NUMBER OF GUEST ROOMS PROVIDED	MINIMUM NUMBER OF REQUIRED GUEST ROOMS WITH COMMUNICATION FEATURES
2 TO 25	2
26 TO 50	4
50 TO 75	7
76 TO 100	9
101 TO 150	12
151 TO 200	14
201 TO 300	17
301 TO 400	20
401 TO 500	22
501 TO 1000	5 PERCENT OF TOTAL
1001 AND OVER	50, PLUS 3 FOR EACH 100 OVER 1000

KEYNOTE FLOOR PLAN

Tag	Description
1	MEDIA WALL
2	MIRROR WALL
3	TV BUILT INTO SLATED WALL
5	RAISED CONCRETE WASHER SLAB WITH TROUGH
6	LOCATED FIRE READ OUT PANEL BEFIND CHECK IN DESK
7	ALIGN DOOR WITH CORRIDOR WALL
8	ADD COURT HOOK TO INSIDE OF ALL RESTROOM DOORS
9	TV IS MOUNTED TO WALL .G.C TO PROVIDE BACKING IN WALL
10	WINDOWS TO BE VENTABLE
11	6'X2' TRASH CONSOLE
29	METAL STUD WALL SEE WALL PARTITION DETAILS

GENERAL FLOOR PLAN NOTES

BASE4 NOTES

1. WHERE FLOOR FINISH CHANGES FROM ONE ROOM TO ANOTHER, SET JOINT OF THE FLOOR MATERIALS AT THE CENTER OF THE COMMUNICATING DOOR.
2. CERAMIC TILE/QUARRY TILE TO BE INSTALLED SO CUT TILES ARE NOT LESS THAN HALF OF A TILE.
3. ALL DIMENSION ARE FROM THE FACE OF STUD UNLESS NOTED OTHERWISE.
4. INTERIOR DOORS TO BE MIN. OF 4" FROM ADJACENT WALLS AS SHOWN ON PLANS.
5. PROVIDE MASONRY CONTROL JOINTS IN EXTERIOR CMU WALLS.
6. GYPSUM WALLBOARD CONTROL JOINTS TO BE 30'-0" MAX O.C. AND AT DOOR JAMBS FROM HEAD TO TERMINATION OF GYPSUM WALLBOARD.
7. PROVIDE ACCESS PANELS AS REQUIRED. (SEE ENGINEERING DRAWINGS)
8. G.C TO PROVIDE BLOCKING FOR ALL ACCESSORIES,BUILDING ITEMS,AND OWNER FF&E ITEMS THAT ARE WALL OR CEILING MOUNTED.
9. ALL EXERCISE EQUIPMENT IS OFOI.
10. GUEST ROOMS WITH "COMMUNICATION FEATURES" SHALL COMPLY WITH 806.3 OF THE 2010 ADA STANDARDS FOR ACCESSIBLE DESIGN. SEE ELECTRICAL FOR DEVICE REQUIREMENTS.
11. SEE INTERIOR DESIGN FOR ALL ACTUAL FINISHES, FURNITURE SIZES AND APPLICABLE DETAILS
12. SEE ID DRAWINGS TO COORDINATE ALL BLOCKING IN WALLS
13. BABY CHANGING STATION IN ALL RESTROOM.

PROJECT NOTES

1. REFER TO ENGINEERING DRAWINGS FOR FIXTURE TYPES AND SPECIFICATIONS
2. REFER TO ARCHITECTURAL FINISH MANUAL FOR FINISH SPECIFICATIONS
3. REFER TO FINISH SCHEDULE FOR TYP. ROOM FINISHES.

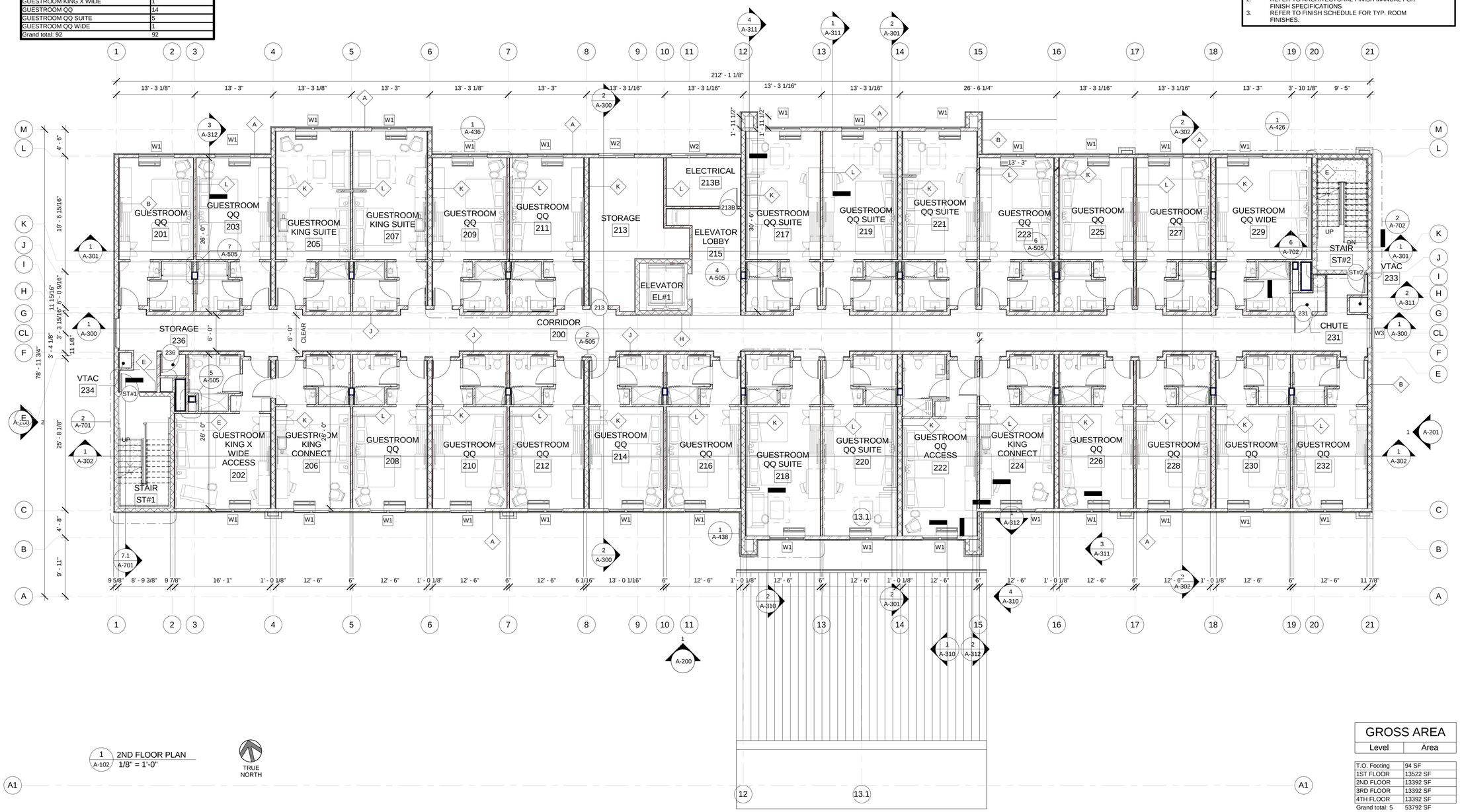

1 A-102 2ND FLOOR PLAN
1/8" = 1'-0"

TRUE NORTH

GROSS AREA

Level	Area
T.O. Footing	94 SF
1ST FLOOR	13522 SF
2ND FLOOR	13392 SF
3RD FLOOR	13392 SF
4TH FLOOR	13392 SF
Grand total: 5	53792 SF

BASE4
9858 GLADES ROAD, #237
BOCA RATON, FLORIDA 33434
1.720.72BASE4 www.base-4.com

RICK MUNIZ, AIA
1025 NW 31ST AVE
POMPANO BEACH, FL 33069

Seal:

Owner:

RANDY GIBBONS
MPH Hotels
100 2nd Avenue South
St. Petersburg, FL 33701
T 727.289.3844

Holiday Inn Express & Suites
Alachua, FL

No.	ISSUED	PROJECT STATUS

DATE	2016.12.02
DRAWN BY	KRN
CHECKED BY	NBL
PROJECT NO.	B4-093-1602
SHEET NAME	

2ND FLOOR PLAN

DRAWINGS NO.

A-102

ISSUED FOR PERMIT

ROOM MATRIX

Name	Count
1ST FLOOR	
GUESTROOM ACC KING X WIDE WITH RIS	1
GUESTROOM KING	2
GUESTROOM KING CONNECT	1
GUESTROOM KING SUITE	2
GUESTROOM QQ	2
2ND FLOOR	
GUESTROOM KING CONNECT	2
GUESTROOM KING SUITE	2
GUESTROOM KING X WIDE ACCESS	1
GUESTROOM QQ	16
GUESTROOM QQ ACCESS	1
GUESTROOM QQ SUITE	5
GUESTROOM QQ WIDE	1
3RD FLOOR	
GUESTROOM KING	1
GUESTROOM KING CONNECT	1
GUESTROOM KING SUITE	2
GUESTROOM KING X WIDE	1
GUESTROOM QQ	16
GUESTROOM QQ ACCESS	1
GUESTROOM QQ SUITE	5
GUESTROOM QQ WIDE	1
4TH FLOOR	
GUESTROOM KING	2
GUESTROOM KING CONNECT	2
GUESTROOM KING SUITE	2
GUESTROOM KING SUITE ACCESS	1
GUESTROOM KING X WIDE	1
GUESTROOM QQ	14
GUESTROOM QQ SUITE	5
GUESTROOM QQ WIDE	1
Grand total: 92	92

Table 9.1.2

	Column "A"	Column "B"
Total Rooms in Facility	Accessible Rooms	Rooms with Roll-in-Shower
1 to 25	1	0
26 to 50	2	0
51 to 75	3	1
76 to 100	4	1
101 to 150	5	2
151 to 200	6	2
201 to 300	7	3
301 to 400	8	4
401 to 500	9	See Below*
501 to 1000	2% of Total rooms	See Below*
1001+	20+ (1 Per 100 over 1000)	See Below*

Note: The Number of accessible guestrooms for a given number of rooms in a hotel (Left column) is derived by adding together Column "A" and Column "B".

* the number of Roll-in-shower rooms in hotels with more than 400 guestrooms total equals 4+ (1 per 100 rooms over 400).

TOTAL NUMBER OF GUEST ROOMS PROVIDED	MINIMUM NUMBER OF REQUIRED GUEST ROOMS WITH COMMUNICATION FEATURES
2 TO 25	2
26 TO 50	4
50 TO 75	7
76 TO 100	9
101 TO 150	12
151 TO 200	14
201 TO 300	17
301 TO 400	20
401 TO 500	22
501 TO 1000	5 PERCENT OF TOTAL
1001 AND OVER	50, PLUS 3 FOR EACH 100 OVER 1000

KEYNOTE FLOOR PLAN

Tag	Description
1	MEDIA WALL
2	MIRROR WALL
3	TV BUILT INTO SLATED WALL
5	RAISED CONCRETE WASHER SLAB WITH TROUGH
6	LOCATED FIRE READ OUT PANEL BEFIND CHECK IN DESK
7	ALIGN DOOR WITH CORRIDOR WALL
8	ADD COURT HOOK TO INSIDE OF ALL RESTROOM DOORS
9	TV IS MOUNTED TO WALL .G.C TO PROVIDE BACKING IN WALL
10	WINDOWS TO BE VENTABLE
11	6'X2' TRASH CONSOLE
29	METAL STUD WALL SEE WALL PARTITION DETAILS

GENERAL FLOOR PLAN NOTES

BASE4 NOTES

1. WHERE FLOOR FINISH CHANGES FROM ONE ROOM TO ANOTHER, SET JOINT OF THE FLOOR MATERIALS AT THE CENTER OF THE COMMUNICATING DOOR.
2. CERAMIC TILE/QUARRY TILE TO BE INSTALLED SO CUT TILES ARE NOT LESS THAN HALF OF A TILE.
3. ALL DIMENSION ARE FROM THE FACE OF STUD UNLESS NOTED OTHERWISE.
4. INTERIOR DOORS TO BE MIN. OF 4" FROM ADJACENT WALLS AS SHOWN ON PLANS.
5. PROVIDE MASONRY CONTROL JOINTS IN EXTERIOR CMU WALLS.
6. GYPSUM WALLBOARD CONTROL JOINTS TO BE 30'-0" MAX O.C. AND AT DOOR JAMBS FROM HEAD TO TERMINATION OF GYPSUM WALLBOARD.
7. PROVIDE ACCESS PANELS AS REQUIRED. (SEE ENGINEERING DRAWINGS)
8. G.C TO PROVIDE BLOCKING FOR ALL ACCESSORIES,BUILDING ITEMS,AND OWNER FF&E ITEMS THAT ARE WALL OR CEILING MOUNTED.
9. ALL EXERCISE EQUIPMENT IS OFOI.
10. GUEST ROOMS WITH "COMMUNICATION FEATURES" SHALL COMPLY WITH 806.3 OF THE 2010 ADA STANDARDS FOR ACCESSIBLE DESIGN. SEE ELECTRICAL FOR DEVICE REQUIREMENTS.
11. SEE INTERIOR DESIGN FOR ALL ACTUAL FINISHES, FURNITURE SIZES AND APPLICABLE DETAILS
12. SEE ID DRAWINGS TO COORDINATE ALL BLOCKING IN WALLS
13. BABY CHANGING STATION IN ALL RESTROOM.

PROJECT NOTES

1. REFER TO ENGINEERING DRAWINGS FOR FIXTURE TYPES AND SPECIFICATIONS
2. REFER TO ARCHITECTURAL FINISH MANUAL FOR FINISH SPECIFICATIONS
3. REFER TO FINISH SCHEDULE FOR TYP. ROOM FINISHES.

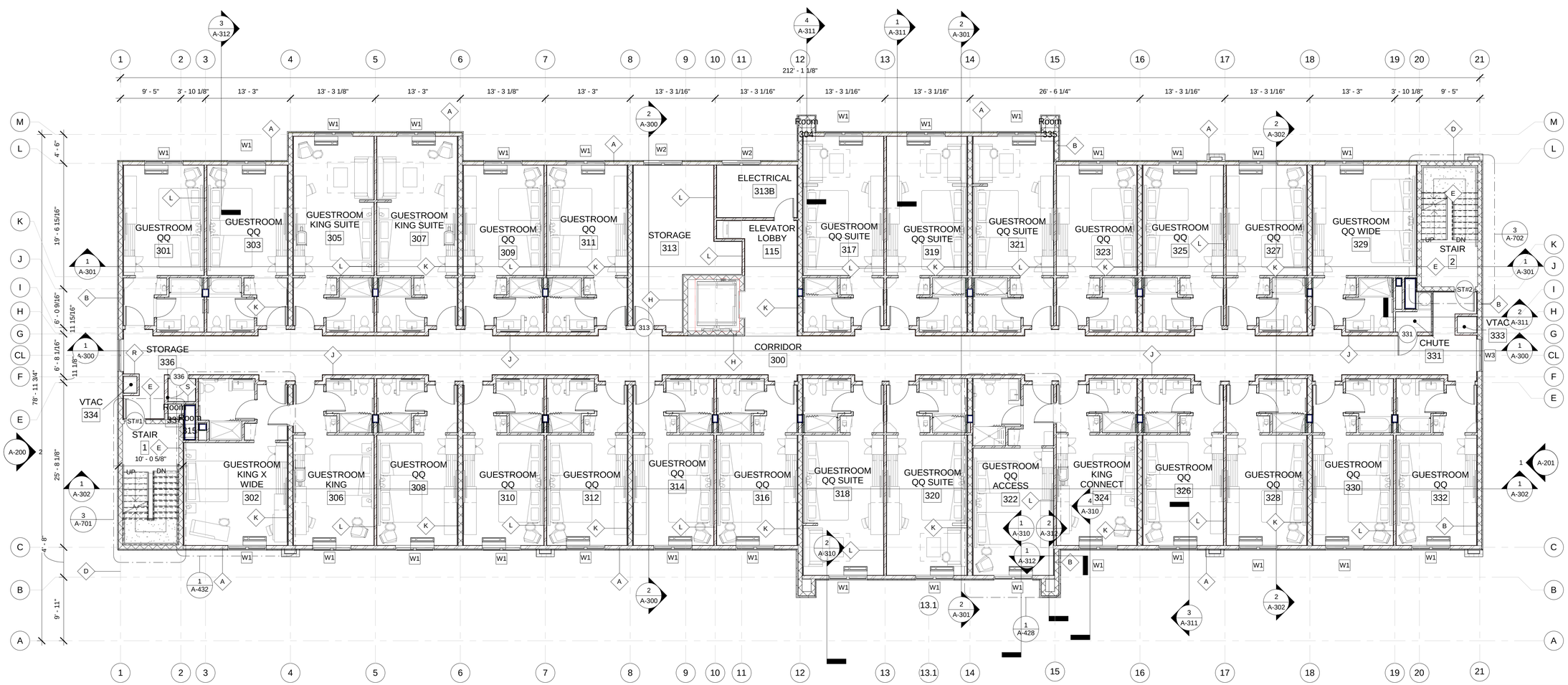

1 (A-103) 3RD FLOOR PLAN
1/8" = 1'-0"

TRUE NORTH

GROSS AREA	
Level	Area
T.O. Footing	94 SF
1ST FLOOR	13522 SF
2ND FLOOR	13392 SF
3RD FLOOR	13392 SF
4TH FLOOR	13392 SF
Grand total: 5	53792 SF

BASE4
9858 GLADES ROAD, #237
BOCA RATON, FLORIDA 33434
1.720.72BASE4 www.base-4.com

RICK MUNIZ, AIA
1025 NW 31ST AVE
POMPANO BEACH, FL 33069

Seal:

Owner:

RANDY GIBBONS
MPH Hotels
100 2nd Avenue South
St. Petersburg, FL 33701
T 727.289.3844

Holiday Inn Express & Suites
Alachua, FL

No.	ISSUED	PROJECT STATUS

DATE	2016.12.02
DRAWN BY	KRN
CHECKED BY	NBL
PROJECT NO.	B4-093-1602
SHEET NAME	

3RD FLOOR PLAN

DRAWINGS NO.

A-103

ISSUED FOR PERMIT

ROOM MATRIX

Name	Count
1ST FLOOR	
GUESTROOM ACC KING X WIDE WITH RIS	1
GUESTROOM KING	2
GUESTROOM KING CONNECT	1
GUESTROOM KING SUITE	2
GUESTROOM QQ	2
2ND FLOOR	
GUESTROOM KING CONNECT	2
GUESTROOM KING SUITE	2
GUESTROOM KING X WIDE ACCESS	1
GUESTROOM QQ	16
GUESTROOM QQ ACCESS	1
GUESTROOM QQ SUITE	5
GUESTROOM QQ WIDE	1
3RD FLOOR	
GUESTROOM KING	1
GUESTROOM KING CONNECT	1
GUESTROOM KING SUITE	2
GUESTROOM KING X WIDE	1
GUESTROOM QQ	16
GUESTROOM QQ ACCESS	1
GUESTROOM QQ SUITE	5
GUESTROOM QQ WIDE	1
4TH FLOOR	
GUESTROOM KING	2
GUESTROOM KING CONNECT	2
GUESTROOM KING SUITE	2
GUESTROOM KING SUITE ACCESS	1
GUESTROOM KING X WIDE	1
GUESTROOM QQ	14
GUESTROOM QQ SUITE	5
GUESTROOM QQ WIDE	1
Grand total: 92	92

Table 9.1.2

	Column "A"	Column "B"
Total Rooms in Facility	Accessible Rooms	Rooms with Roll-in-Shower
1 to 25	1	0
26 to 50	2	0
51 to 75	3	1
76 to 100	4	1
101 to 150	5	2
151 to 200	6	2
201 to 300	7	3
301 to 400	8	4
401 to 500	9	See Below*
501 to 1000	2% of Total rooms	See Below*
1001+	20+ (1 Per 100 over 1000)	See Below*

Note: The Number of accessible guestrooms for a given number of rooms in a hotel (Left column) is derived by adding together Column "A" and Column "B".

* the number of Roll-in-shower rooms in hotels with more than 400 guestrooms total equals 4+ (1 per 100 rooms over 400).

TOTAL NUMBER OF GUEST ROOMS PROVIDED	MINIMUM NUMBER OF REQUIRED GUEST ROOMS WITH COMMUNICATION FEATURES
2 TO 25	2
26 TO 50	4
50 TO 75	7
76 TO 100	9
101 TO 150	12
151 TO 200	14
201 TO 300	17
301 TO 400	20
401 TO 500	22
501 TO 1000	5 PERCENT OF TOTAL
1001 AND OVER	50, PLUS 3 FOR EACH 100 OVER 1000

KEYNOTE FLOOR PLAN

Tag	Description
1	MEDIA WALL
2	MIRROR WALL
3	TV BUILT INTO SLATED WALL
5	RAISED CONCRETE WASHER SLAB WITH TROUGH
6	LOCATED FIRE READ OUT PANEL BEFIND CHECK IN DESK
7	ALIGN DOOR WITH CORRIDOR WALL
8	ADD COURT HOOK TO INSIDE OF ALL RESTROOM DOORS
9	TV IS MOUNTED TO WALL .G.C TO PROVIDE BACKING IN WALL
10	WINDOWS TO BE VENTABLE
11	6'X2' TRASH CONSOLE
29	METAL STUD WALL SEE WALL PARTITION DETAILS

GENERAL FLOOR PLAN NOTES

BASE4 NOTES

1. WHERE FLOOR FINISH CHANGES FROM ONE ROOM TO ANOTHER, SET JOINT OF THE FLOOR MATERIALS AT THE CENTER OF THE COMMUNICATING DOOR.
2. CERAMIC TILE/QUARRY TILE TO BE INSTALLED SO CUT TILES ARE NOT LESS THAN HALF OF A TILE.
3. ALL DIMENSION ARE FROM THE FACE OF STUD UNLESS NOTED OTHERWISE.
4. INTERIOR DOORS TO BE MIN. OF 4" FROM ADJACENT WALLS AS SHOWN ON PLANS.
5. PROVIDE MASONRY CONTROL JOINTS IN EXTERIOR CMU WALLS.
6. GYPSUM WALLBOARD CONTROL JOINTS TO BE 30'-0" MAX O.C. AND AT DOOR JAMBS FROM HEAD TO TERMINATION OF GYPSUM WALLBOARD.
7. PROVIDE ACCESS PANELS AS REQUIRED. (SEE ENGINEERING DRAWINGS)
8. G.C TO PROVIDE BLOCKING FOR ALL ACCESSORIES,BUILDING ITEMS,AND OWNER FF&E ITEMS THAT ARE WALL OR CEILING MOUNTED.
9. ALL EXERCISE EQUIPMENT IS OFOI.
10. GUEST ROOMS WITH "COMMUNICATION FEATURES" SHALL COMPLY WITH 806.3 OF THE 2010 ADA STANDARDS FOR ACCESSIBLE DESIGN. SEE ELECTRICAL FOR DEVICE REQUIREMENTS.
11. SEE INTERIOR DESIGN FOR ALL ACTUAL FINISHES, FURNITURE SIZES AND APPLICABLE DETAILS
12. SEE ID DRAWINGS TO COORDINATE ALL BLOCKING IN WALLS
13. BABY CHANGING STATION IN ALL RESTROOM.

PROJECT NOTES

1. REFER TO ENGINEERING DRAWINGS FOR FIXTURE TYPES AND SPECIFICATIONS
2. REFER TO ARCHITECTURAL FINISH MANUAL FOR FINISH SPECIFICATIONS
3. REFER TO FINISH SCHEDULE FOR TYP. ROOM FINISHES.

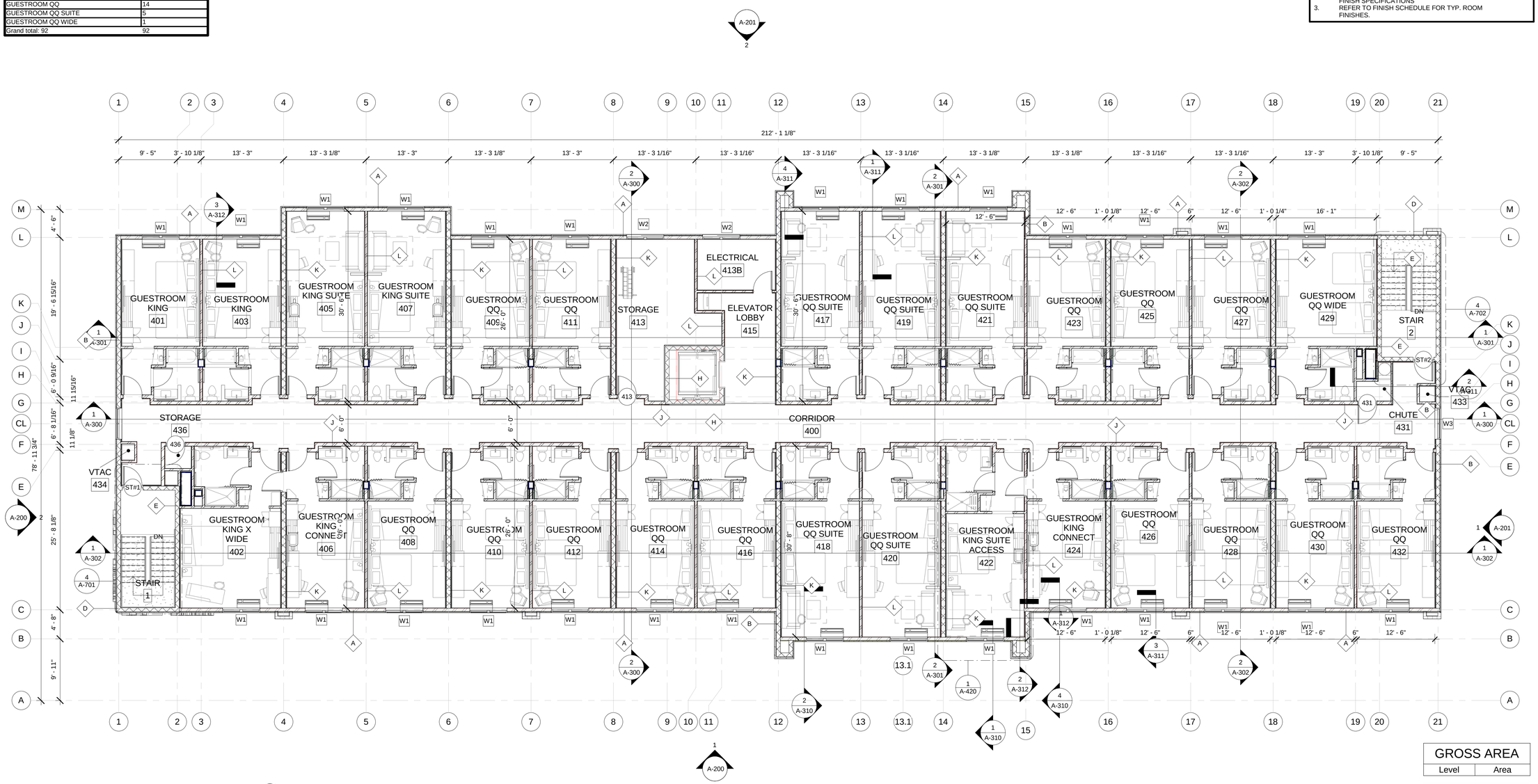

1 / A-104 4TH FLOOR PLAN
1/8" = 1'-0"

TRUE NORTH

GROSS AREA

Level	Area
T.O. Footing	94 SF
1ST FLOOR	13522 SF
2ND FLOOR	13392 SF
3RD FLOOR	13392 SF
4TH FLOOR	13392 SF
Grand total: 5	53792 SF

BASE4
9858 GLADES ROAD, #237
BOCA RATON, FLORIDA 33434
1.720.72BASE4 www.base-4.com

RICK MUNIZ, AIA
1025 NW 31ST AVE
POMPANO BEACH, FL 33069

Seal:

Owner:

RANDY GIBBONS
MPH Hotels
100 2nd Avenue South
St. Petersburg, FL 33701
T 727.289.3844

Holiday Inn Express & Suites
Alachua, FL

No.	ISSUED	PROJECT STATUS

DATE	2016.12.02
DRAWN BY	KRN
CHECKED BY	NBL
PROJECT NO.	B4-093-1602
SHEET NAME	

4TH FLOOR PLAN

DRAWINGS NO.

A-104

ISSUED FOR PERMIT

Roof Plan Keynotes

Tag	Description
1	ROOF PAVER
3	ELEVATOR PENTHOUSE
4	ROOF MOUNTED AIR HANDLING EQUIPMENT
5	ROOF CRICKET, (TYP)
6	OVERFLOW ROOF DRAIN
7	ROOF DRAIN (R.D.), (TYP)
8	EXHAUST FAN (TYP)
10	ROOF BELOW
11	EXTRWIDE PREFINSIHED ALUMINUM COPING
12	SINGLE PLY ROOFING ON TAPERED INSULATION ON PRE-CAST SLAB.
14	ROOF HATCH
15	PROVIDE LAUNDRY CAP HERE

GENERAL NOTES

1. GENERAL CONTRACTOR TO INSTALL AND SEAL ROOF PENETRATIONS, CURBS AND SLEEPERS.
2. HVAC VENDOR TO PROVIDE ROOF CURBS AND VENDOR IS RESPONSIBLE FOR PROVISION/ COORDINATION OF ROOF PENETRATIONS REQUIRED FOR EQUIPMENT INSTALLATION.
3. FLASH PLUMBING VENT AND ELECTRICAL PIPES. SEE MECH. AND ELEC. DWGS. FOR LOCATIONS.
4. COORDINATE SIZE AND LOCATION OF SATELLITE DISH PROVIDED BY AV CONTRACTOR. COORDINATE LOADS AND REACTIONS WITH JOIST MANUFACTURER. GC TO PROVIDE SUPPORT LEGS/BLOCKING
5. NEW ROOF MEMBRANE TO BE INSTALLED BY MANUFACTURER APPROVED LICENSED ROOFING CONTRACTOR. REFER TO DETAILS AS INDICATED ON THIS AND OTHER SHEETS.
6. ROOF DRAINS AND OVERFLOW DRAINS SEE ALSO MECH. DWGS.
7. ROOF DRAINAGE IS SHOWN FOR GENERAL INFORMATION ONLY. SEE PLUMBING PLANS FOR TYPE/LOCATION & SIZE OF DRAINAGE/SCUPPERS ETC.
8. ALL ROOF TOP EQUIPMENT, PLUMBING, VENTS,CONDENSING UNITS, EXHAUST FANS, BOILER FLUES, ETC ARE TO BE CONCEALED FROM VIEW BEHIND PARAPET WALSS.
9. KEEP ROOF MOUNTED EQUIPMENT AWAY FROM PARAPETS TO REDUCE SIGHT LINES.
10. (IF APPLICABLE) PROVIDE CONDUIT FROM PBX TO ROOF FOR H.I.B.S. SATELLITE DISH ON SEPARATE CIRCUIT. PROVIDE POWER ON ROOF EDGE FOR HEATER WHEN REQUIRED.
11. ALL ROOF CURBS PIPE CONDUIT FLASHING COLLARS AND PIPE ROLLER SUPPORTS SHALL BE AS DESCRIBED IN DIV. 15 AND 16 OF THE SPECIFICATIONS.
12. ALL CONDENSATE DRAINS FROM ROOF TOP EQUIPMENT WILL BE PROVIDED IN INSULATED TRAP IF NOT INCLUDED WITH EQUIPMENT.
13. PROVIDE WALK PADS FROM ROOF HATCH TO WORK AREA AND AROUND ALL ROOF TOP EQUIPMENT.
14. SEE MECHANICAL, ELECTRICAL AND STRUCTURAL DRAWINGS FOR SIZES AND LOCATIONS OF ALL OPENINGS AND ROOF TOP EQUIPMENT.
15. ALL OPENINGS THROUGH FIRE RATED ASSEMBLIES TO RECEIVE FIRE STOPPING (WITH APPROPRIATE UL RATING).
16. G.C. TO PROVIDE SHOP DRAWINGS, INCLUDING TAPERING LAYOUTS FOR EPDM ROOF SYSTEM.
17. TIE ALL ROOF DRAINS INTO STORM DRAINAGE SYSTEM.
18. ALL SOIL STACKS MUST BE A MIN. OF 15' AWAY FROM INTAKES.
19. ILLUMINATED CHANNEL LETTER SIGNAGE O.F.O.I.G.C. TO PROVIDE BLOCKING, POWER AND J-BOXES AS REQUIRED FOR COMPLETE INSTALLATION. COORDINATE BLOCKING LOCATIONS WITH SIGN SUPPLIER- SEE SPECS. MIN. BLOCKING SIZE TO BE 3/4" PLYWOOD INSTALLER TO PROVIDE ALL ACCESS TO ELECTRICAL AT THE ROOF, NO EXCEPTIONS NO ACCESS PANELS ALLOWED IN GUEST UNITS.

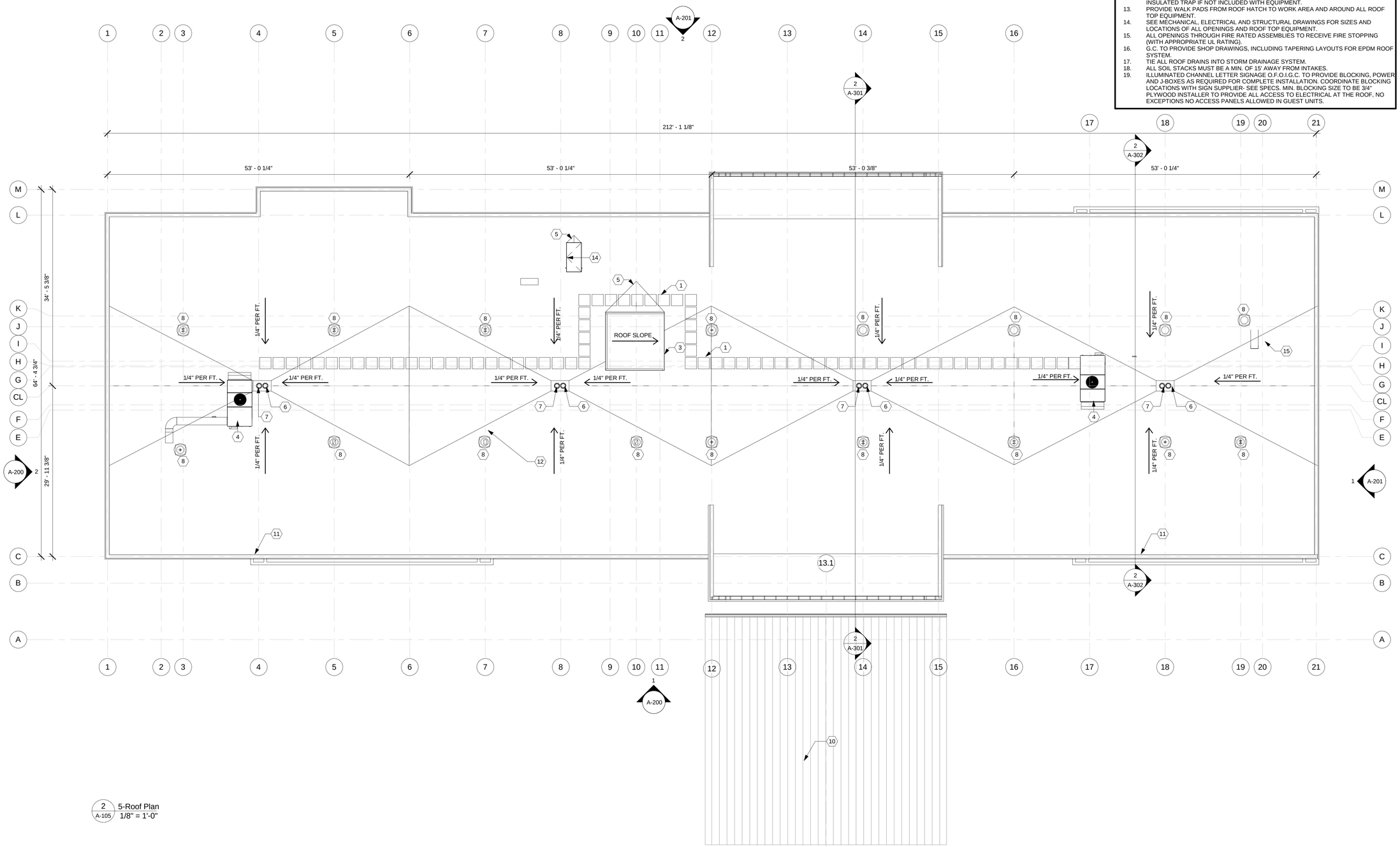

2 A-105 5-Roof Plan
1/8" = 1'-0"

BASE4
9858 GLADES ROAD, #237
BOCA RATON, FLORIDA 33434
1.720.72BASE4 www.base-4.com

RICK MUNIZ, AIA
1025 NW 31ST AVE
POMPANO BEACH, FL 33069

Seal:

Owner:

RANDY GIBBONS
MPH Hotels
100 2nd Avenue South
St. Petersburg, FL 33701
T 727.289.3844

Holiday Inn Express & Suites
Alachua, FL

No.	ISSUED	PROJECT STATUS

DATE	2016.12.02
DRAWN BY	KRN
CHECKED BY	NBL
PROJECT NO.	B4-093-1602

SHEET NAME

ROOF LEVEL PLAN

DRAWINGS NO.

A-105

ISSUED FOR PERMIT

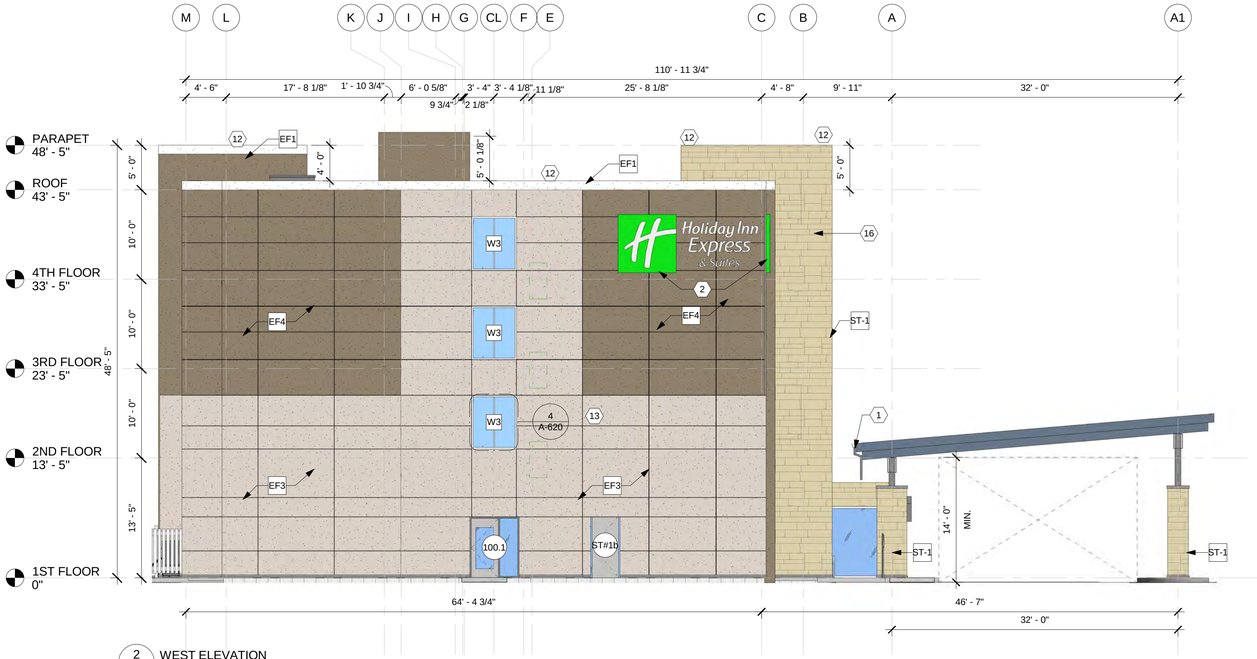

2 A-200 WEST ELEVATION
1/8" = 1'-0"

EXTERIOR WALL MATERIALS
TOTAL: 3,401 SF
EIFS: 2,977/3,401 = 88%
STONE VENEER: 424/3,401 = 12%

1 A-200 SOUTH ELEVATION
1/8" = 1'-0"

EXTERIOR WALL MATERIALS
TOTAL: 7,312 SF
EIFS: 6,650/7,312 = 90%
STONE VENEER: 662/7,312 = 10%

13'-5" -8" (Structure height)= 12'-9"
12.75* 212.58= 2,710 SF 1st floor
369 SF Windows (41 SF * 9 windows)
478 SF Curtain Glazing
874 Total glazing/2710 Wall
31.2% Glazing

LEGEND - EXTERIOR FINISHES

X

CODE	MATERIAL	MANUFACTURER AND COLOR
EF1	EIFS	COLOR: SNOWBALL 10400L
EF2	EIFS	ACESSIBLE BEIGE SW7036 (SMOOTH)
EF3	EIFS	ACESSIBLE BEIGE SW7036 (TEXTURED)
EF4	EIFS	VIRTUAL TAUPE SW7039
EF5	EIFS	ROCKWOOD TERRA COTTA SW2803
EF6	EIFS	ROCKWOOD TERRA COTTA SW2803 SMOOTH TEXTURE
ST-1	STONE	PRO-FIT LEDGESTONE SOUTHWEST BLEND

KEYNOTES- ELEVATION

Tag	Text
1	PREFINISHED METAL GUTTER
2	LIGHTED SIGNAGE BY VENDOR
3	EXTERIOR FORMULA DOWN LIGHTING. MOUNT AT 7'-6" AFF
4	EXTERIOR FORMULA UP LIGHTING. MOUNT AT 11'-6" AFF
5	EXTERIOR "X" LIGHTING
6	EIFS REVEAL TO LOOK LIKE WINDOW
7	EIFS BAND DETAIL
8	NOT USED
9	BLACK OUT FILM APPLIED TO GLAZING
10	CLEARANCE SIGN-12'-6". PROVIDE MARKINGS INDICATING THE EXTENT OF 12'-6" CLEARENCE
11	PLACE BUILDING ADDRESS HERE
12	SHEET METAL PARAPET CAP
13	EIFS REVEAL TYP
14	PTAC LOUVER TO MATCH FINISH EIFS
15	12" DEEP EIFS FALSE COLUMN
16	2' WIDE & 1' DEEP POP OUT

GENERAL ELEVATION NOTES

BASE4 NOTES

1. REVIEW ALL SIGHTLINES AROUND PROPERTY BEFORE LOCATING ROOFTOP EQUIPMENT. VERIFY ALL EQUIPMENT IS ADEQUATELY SCREENED.
2. EXTERIOR INSUL. & FINISH SYSTEM (EIFS) SYSTEM TO BE INSTALLED PER MANUFACTURERS SPECIFICATIONS AND DETAILS.
3. MANUFACTURERS INSTALLATION MANUAL, SPECIFICATIONS, CONSTRUCTION DOCUMENTS AND PROJECT MANUAL TO BE ON SITE THROUGHOUT CONSTRUCTION PROCESS.
4. EIFS WARRANTY.
A. MANUFACTURES SHALL PROVIDE A WRITTEN, 10 YR. LIMITED MATERIALS WARRANTY AGAINST DEFECTIVE MATERIALS.
B. THE APPLICATOR SHALL WARRANT WORKMANSHIP SEPARATELY AND PROVIDE A 5 YR WARRANTY AGAINST DEFECTIVE INSTALLATION WORKMANSHIP.
5. ALL LOUVERS AND MECHANICAL VENTS & FLASHING TO MATCH ADJACENT SURFACE

BUILDING SIGNAGE NOTES

1. ALL SIGNAGE INDICATED FOR ILLUSTRATIVE PURPOSES ONLY. LOCATION, SIZE, ETC. TO BE PER FRANCHISE REQUIREMENTS.
2. MINIMUM EXTERIOR GRADE 3/4" PLYWOOD BLOCKING REQUIRED AT SIGN LOCATIONS. AREA SHOULD COVER ENTIRE LENGTH AND HEIGHT OF FASCIA OR SPACE AVAILABLE FOR SIGN.
3. ELECTRICAL AND FINAL CONNECTION BY CONTRACTOR. ELECTRICAL REQUIREMENTS MAY BE OBTAINED FROM SIGN COMPANY.
4. RACEWAYS / WIREWAYS ARE NOT ALLOWED.
5. PERMANENT ACCESS DOORS TO INTERIOR OF ALL PARAPETS WHERE SIGNS ARE LOCATED TO BE PROVIDED BY CONTRACTOR AND COORDINATED WITH ARCHITECT. CONTRACTOR TO FURNISH AND CONNECT PRIMARY ELECTRICAL SERVICE INSIDE PARAPET WALL.
6. GUESTROOMS OR PUBLIC SPACES WITH SIGNAGE ON EXTERIOR WALLS MUST HAVE ELECTRICAL PENETRATIONS, ACCESS DOORS AND/OR REMOTE TRANSFORMERS COORDINATED AND/OR INSTALLED, WITH ARCHITECT APPROVAL, PRIOR TO CLOSING UP THE WALL. PENETRATION LAYOUT MAY BE OBTAINED FROM SIGN COMPANY.

BASE4
9858 GLADES ROAD, #237
BOCA RATON, FLORIDA 33434
1.720.72BASE4 www.base-4.com

RICK MUNIZ, AIA
1025 NW 31ST AVE
POMPANO BEACH, FL 33069

Seal:

Owner:

RANDY GIBBONS
MPH Hotels
100 2nd Avenue South
St. Petersburg, FL 33701
T 727.289.3844

Holiday Inn Express & Suites
Alachua, FL

No.	ISSUED	PROJECT STATUS

DATE	2016.12.02
DRAWN BY	KRN
CHECKED BY	NBL
PROJECT NO.	B4-093-1602

SHEET NAME

EXTERIOR ELEVATIONS-1

DRAWINGS NO.

A-200

ISSUED FOR PERMIT

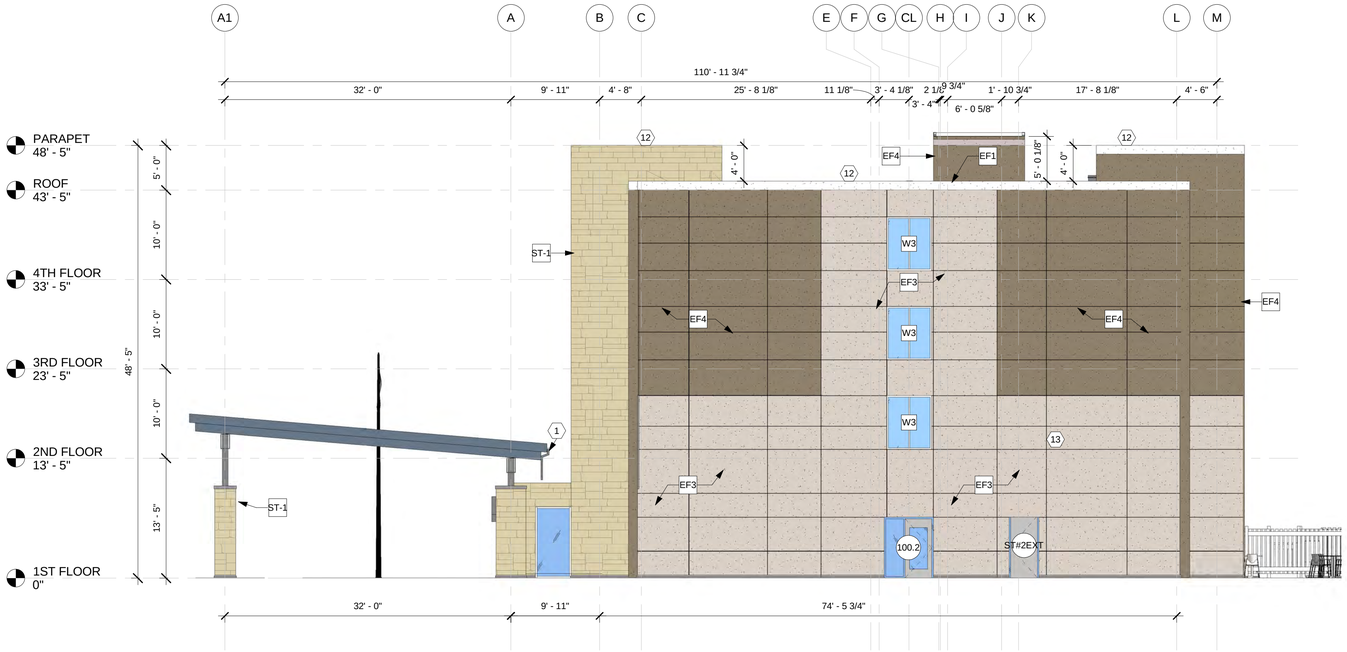

1 A-201 EAST ELEVATION
1/8" = 1'-0"

EXTERIOR WALL MATERIALS
TOTAL: 3,409 SF
EIFS: 2,977/3,409 = 87%
STONE VENEER: 432/3,409 = 13%

EXTERIOR WALL MATERIALS
EIFS: 7,142 SF = 100%

2 A-201 NORTH ELEVATION
1/8" = 1'-0"

13'-5" -8" (Structure height)= 12'-9"
12.75* 212.58= 2,710 SF 1st floor
246 SF Windows (41 SF * 6 windows)
352 SF Curtain Glazing
598 S.F. Total glazing/2710 S.F Wall
22.2% Glazing

LEGEND - EXTERIOR FINISHES

X

CODE	MATERIAL	MANUFACTURER AND COLOR
EF1	EIFS	COLOR: SNOWBALL 10400L
EF2	EIFS	ACESSIBLE BEIGE SW7036 (SMOOTH)
EF3	EIFS	ACESSIBLE BEIGE SW7036 (TEXTURED)
EF4	EIFS	VIRTUAL TAUPE SW7039
EF5	EIFS	ROCKWOOD TERRA COTTA SW2803
EF6	EIFS	ROCKWOOD TERRA COTTA SW2803 SMOOTH TEXTURE
ST-1	STONE	PRO-FIT LEDGESTONE SOUTHWEST BLEND

KEYNOTES- ELEVATION

Tag	Text
1	PREFINISHED METAL GUTTER
2	LIGHTED SIGNAGE BY VENDOR
3	EXTERIOR FORMULA DOWN LIGHTING. MOUNT AT 7'-6" AFF
4	EXTERIOR FORMULA UP LIGHTING. MOUNT AT 11'-6" AFF
5	EXTERIOR "X" LIGHTING
6	EIFS REVEAL TO LOOK LIKE WINDOW
7	EIFS BAND DETAIL
8	NOT USED
9	BLACK OUT FILM APPLIED TO GLAZING
10	CLEARANCE SIGN-12'-6". PROVIDE MARKINGS INDICATING THE EXTENT OF 12'-6" CLEARENCE
11	PLACE BUILDING ADDRESS HERE
12	SHEET METAL PARAPET CAP
13	EIFS REVEAL TYP
14	PTAC LOUVER TO MATCH FINISH EIFS
15	12" DEEP EIFS FALSE COLUMN
16	2' WIDE & 1' DEEP POP OUT

GENERAL ELEVATION NOTES

BASE4 NOTES

1. REVIEW ALL SIGHTLINES AROUND PROPERTY BEFORE LOCATING ROOFTOP EQUIPMENT. VERIFY ALL EQUIPMENT IS ADEQUATELY SCREENED.
2. EXTERIOR INSUL. & FINISH SYSTEM (EIFS) SYSTEM TO BE INSTALLED PER MANUFACTURERS SPECIFICATIONS AND DETAILS.
3. MANUFACTURERS INSTALLATION MANUAL, SPECIFICATIONS, CONSTRUCTION DOCUMENTS AND PROJECT MANUAL TO BE ON SITE THROUGHOUT CONSTRUCTION PROCESS.
4. EIFS WARRANTY:
A. MANUFACTURES SHALL PROVIDE A WRITTEN, 10 YR. LIMITED MATERIALS WARRANTY AGAINST DEFECTIVE MATERIALS.
B. THE APPLICATOR SHALL WARRANT WORKMANSHIP SEPARATELY AND PROVIDE A 5 YR WARRANTY AGAINST DEFECTIVE INSTALLATION WORKMANSHIP.
5. ALL LOUVERS AND MECHANICAL VENTS & FLASHING TO MATCH ADJACENT SURFACE

BUILDING SIGNAGE NOTES

1. ALL SIGNAGE INDICATED FOR ILLUSTRATIVE PURPOSES ONLY. LOCATION, SIZE, ETC. TO BE PER FRANCHISE REQUIREMENTS.
2. MINIMUM EXTERIOR GRADE 3/4" PLYWOOD BLOCKING REQUIRED AT SIGN LOCATIONS. AREA SHOULD COVER ENTIRE LENGTH AND HEIGHT OF FASCIA OR SPACE AVAILABLE FOR SIGN.
3. ELECTRICAL AND FINAL CONNECTION BY CONTRACTOR. ELECTRICAL REQUIREMENTS MAY BE OBTAINED FROM SIGN COMPANY.
4. RACEWAYS / WIREWAYS ARE NOT ALLOWED.
5. PERMANENT ACCESS DOORS TO INTERIOR OF ALL PARAPETS WHERE SIGNS ARE LOCATED TO BE PROVIDED BY CONTRACTOR AND COORDINATED WITH ARCHITECT. CONTRACTOR TO FURNISH AND CONNECT PRIMARY ELECTRICAL SERVICE INSIDE PARAPET WALL.
6. GUESTROOMS OR PUBLIC SPACES WITH SIGNAGE ON EXTERIOR WALLS MUST HAVE ELECTRICAL PENETRATIONS, ACCESS DOORS AND/OR REMOTE TRANSFORMERS COORDINATED AND/OR INSTALLED, WITH ARCHITECT APPROVAL, PRIOR TO CLOSING UP THE WALL. PENETRATION LAYOUT MAY BE OBTAINED FROM SIGN COMPANY.

BASE4
9858 GLADES ROAD, #237
BOCA RATON, FLORIDA 33434
1.720.72BASE4 www.base-4.com

RICK MUNIZ, AIA
1025 NW 31ST AVE
POMPANO BEACH, FL 33069

Seal:

Owner:

RANDY GIBBONS
MPH Hotels
100 2nd Avenue South
St. Petersburg, FL 33701
T 727.289.3844

Holiday Inn Express & Suites
Alachua, FL

No.	ISSUED	PROJECT STATUS

DATE	2016.12.02
DRAWN BY	KRN
CHECKED BY	NBL
PROJECT NO.	B4-093-1602
SHEET NAME	

EXTERIOR ELEVATIONS-2

DRAWINGS NO.

A-201

ISSUED FOR PERMIT

City of ALACHUA

NOTICE OF PUBLIC HEARING BEFORE THE PLANNING AND ZONING BOARD OF THE CITY OF ALACHUA, FLORIDA

Notice is hereby given that the Planning and Zoning Board of the City of Alachua will hold a public hearing on January 10, 2017 at 6:00 p.m. The hearing will be held in the James A. Lewis Commission Chambers in City Hall, located at 15100 NW 142nd Terrace, Alachua, Florida, to consider the following: A request by Sergio Reyes, PE, of eda engineers-surveyors-planners, inc., applicant and agent for Hipp Investments, LLC., property owner, for consideration of a Site Plan for a proposed ±58,821 square foot, 92 room hotel with associated drainage, paving, grading, and utility infrastructure improvements on a ±4.24 acre subject property, located at 16367 NW 167th Boulevard (north of NW US Highway 441, south of the Heritage Oaks Subdivision, east of the Alachua Market Place Plaza); a portion of Tax Parcel No. 03053-001-001; FLUM: Commercial; Zoning: Commercial Intensive (CI).

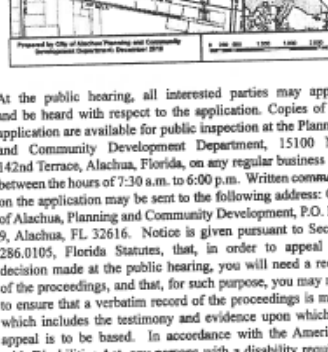

At the public hearing, all interested parties may appear and be heard with respect to the application. Copies of the application are available for public inspection at the Planning and Community Development Department, 15100 NW 142nd Terrace, Alachua, Florida, on any regular business day between the hours of 7:30 a.m. to 6:00 p.m. Written comments on the application may be sent to the following address: City of Alachua, Planning and Community Development, P.O. Box 9, Alachua, FL 32616. Notice is given pursuant to Section 286.0105, Florida Statutes, that, in order to appeal any decision made at the public hearing, you will need a record of the proceedings, and that, for such purpose, you may need to ensure that a verbatim record of the proceedings is made, which includes the testimony and evidence upon which the appeal is to be based. In accordance with the Americans with Disabilities Act, any persons with a disability requiring reasonable accommodation in order to participate in this meeting should call the City Clerk at (386) 418-6100 x 101 at least 48 hours prior to the public hearing.

(Published: Alachua County Today - December 29, 2016)

MAILED 12/21/16
AJH

City of ALACHUA

THE GOOD LIFE COMMUNITY

NOTICE OF PUBLIC HEARING BEFORE THE PLANNING AND ZONING BOARD OF THE CITY OF ALACHUA, FLORIDA

Notice is hereby given that the Planning and Zoning Board of the City of Alachua will hold a public hearing on January 10, 2017 at 6:00 p.m. The hearing will be held in the James A. Lewis Commission Chambers in City Hall, located at 15100 NW 142nd Terrace, Alachua, Florida, to consider the following: A request by Sergio Reyes, PE, of eda engineers-surveyors-planners, inc., applicant and agent for Hipp Investments, LLC., property owner, for consideration of a Site Plan for a proposed ±58,821 square foot, 92 room hotel with associated drainage, paving, grading, and utility infrastructure improvements on a ±4.24 acre subject property, located at 16367 NW 167th Boulevard (north of NW US Highway 441, south of the Heritage Oaks Subdivision, and east of the Alachua Market Place Plaza); a portion of Tax Parcel No. 03053-001-001; FLUM: Commercial; Zoning: Commercial Intensive (CI).

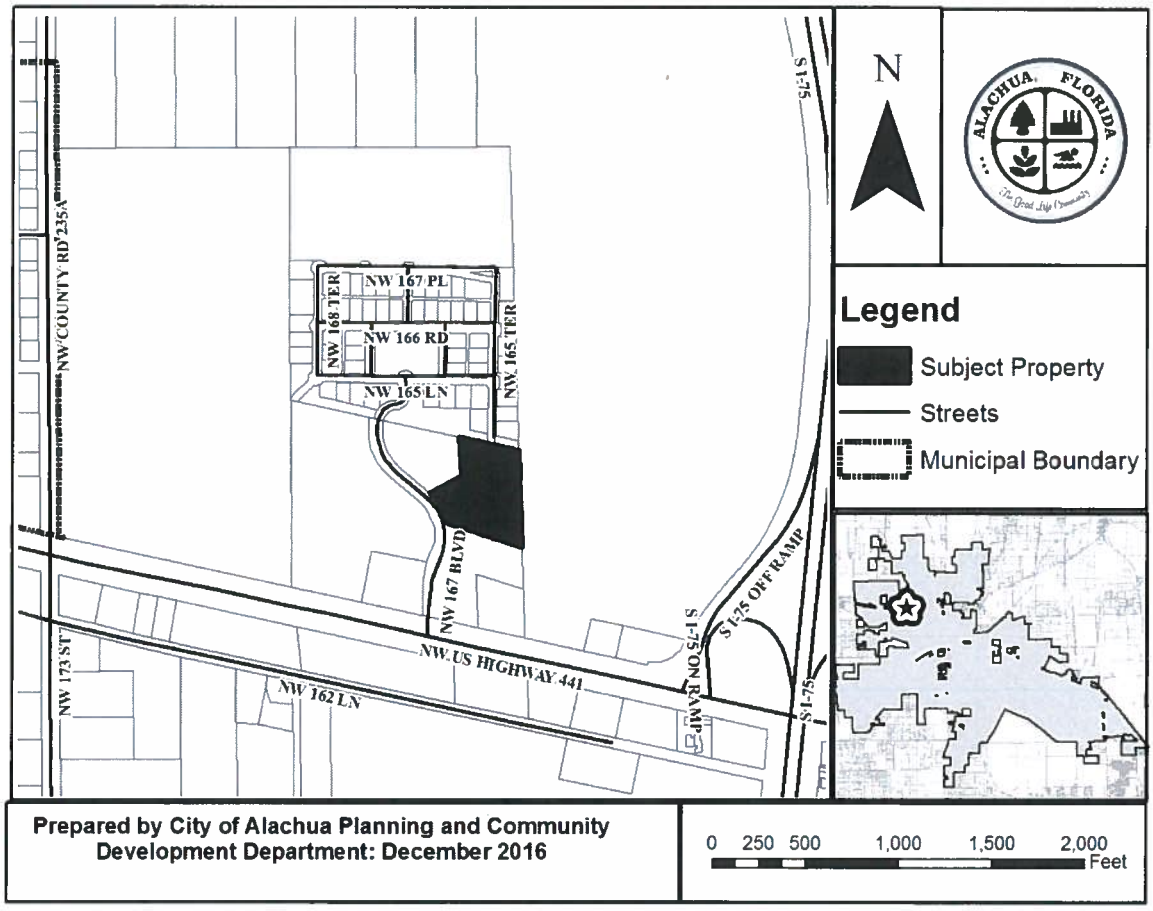

City of ALACHUA

THE GOOD LIFE COMMUNITY

At the public hearing, all interested parties may appear and be heard with respect to the application. Copies of the application are available for public inspection at the Planning and Community Development Department, 15100 NW 142nd Terrace, Alachua, Florida, on any regular business day between the hours of 7:30 a.m. to 6:00 p.m. Written comments on the application may be sent to the following address: City of Alachua, Planning and Community Development, P.O. Box 9, Alachua, FL 32616. Notice is given pursuant to Section 286.0105, Florida Statutes, that, in order to appeal any decision made at the public hearing, you will need a record of the proceedings, and that, for such purpose, you may need to ensure that a verbatim record of the proceedings is made, which includes the testimony and evidence upon which the appeal is to be based. In accordance with the Americans with Disabilities Act, any persons with a disability requiring reasonable accommodation in order to participate in this meeting should call the City Clerk at (386) 418-6100 x 101 at least 48 hours prior to the public hearing.

03053-010-054
SCHULTZ, RICHARD B & CECILIA
1171 APPIAN WAY
SANTA ANA, CA 92705

03053-001-002
TALAL PROPERTIES LTD & TAREK
1326 E LUMSDEN RD
BRANDON, FL 33511

03053-001-005
A MASON GRACE RENTALS LLC
13929 NW 166TH TER
ALACHUA, FL 32615

03053-001-001
HIPP INVESTMENTS LLC
14610 NW 129TH TER
ALACHUA, FL 32615

03053-010-014
FORD NATHANIEL M III & TIROSHSA T
16515 NW 165TH TER
ALACHUA, FL 32615

03053-010-015
MITCHELL CHARLES E & NANCY E
16530 NW 165TH TER
ALACHUA, FL 32615

03053-010-013
JELMBERG MICHAEL & MARY
16545 NW 165TH TER
ALACHUA, FL 32615

03053-010-017
NYGAARD & STRATTAN
16567 NW 165TH LN
ALACHUA, FL 32615

03053-010-012
FROMHOLT DAVID B & SUSAN E
16575 NW 165TH TER
ALACHUA, FL 32615

03053-010-048
WESTBROOK BENTON C & DORA H
16602 NW 167TH DR
ALACHUA, FL 32615

03053-010-045
NOTO & NOTO
16603 NW 168TH TER
Alachua, FL 32615

03053-010-051
HARRIS AARON A
16609 NW 166TH DR
ALACHUA, FL 32615

03053-010-011
AXIAK LAURA ANNE
16611 NW 165TH TER
ALACHUA, FL 32615

03053-010-018
WALLACE CHARLES E & PATRICIA A
16621 NW 165TH LN
ALACHUA, FL 32615

03053-010-044
GEPHART RALPH G & DOROTHY J
16623 NW 168TH TER
ALACHUA, FL 32615

03053-010-053
DAVIS RICHARD E JR & MAUREEN
16624 NW 165TH TER
ALACHUA, FL 32615

03053-010-046
BOLANOS & MCKERCHER W/H
16642 NW 167TH DR
ALACHUA, FL 32615

03053-010-019
MANDARINO TERRANCE M & LISA CLARK
16651 NW 165TH LN
ALACHUA, FL 32615

03053-010-001
STEVENS JOHN J & JAMIE N
16775 NW 165TH LANE
ALACHUA, FL 32615

03053-010-002
DOLBEC RICHARD D II & LAUREN K
16813 NW 165TH LANE
Alachua, FL 32615

03053-010-003
GRIEVE THOMAS H & MELISA A
16843 NW 165TH LN
ALACHUA, FL 32615

03053-010-004
BROOKS TODD B
16873 NW 165TH LN
ALACHUA, FL 32615

03053-010-047
ROGERS, MICHAEL C & FELICIA GA
24644 49TH RD
O'BRIEN, FL 32071

03049-000-000
MEGAHEE ENTERPRISES LTD.,LLLP
2632 NW 43RD ST # 2138
GAINESVILLE, FL 32606

03049-003-000
MURPHY'S LOT LLC
2632 NW 43RD ST STE 2138
GAINESVILLE, FL 32606-7545

03053-001-004
ALACHUA-WINDCREST LLC
605 EAST ROBINSON ST STE 340
ORLANDO, FL 32801

03053-010-016
CARTER DIANE S
8502 NW 35TH RD
GAINESVILLE, FL 32606

03053-002-000
PATEL, INDIRA K
8706 SADDLEHORN DR
IRVING, TX 75063

03053-000-000
CAVACEPPI, SHARLEEN O TRUSTEE
PO BOX 1325
ALACHUA, FL 32616-1325

03053-001-003
RACETRAC PETROLEUM INC
PO BOX 56607
ATLANTA, GA 30343

03061-004-001
CIRCLE K STORES INC
PO BOX 8019
GARY, NC 27512-9998

03053-010-000
HERITAGE OAKS PROPERTY, OWNERS
PO BOX 969
Alachua, FL 32516

Antoinette Endelicato
5562 NW 93rd Avenue
Gainesville, FL 32653

Dan Rhine
288 Turkey Creek
Alachua, FL 32615

Tom Gorman
9210 NW 59th Street
Alachua, FL 32653

Richard Gorman
5716 NW 93rd Avenue
Alachua, FL 32653

Peggy Arnold
410 Turkey Creek
Alachua, FL 32615

David Forest
23 Turkey Creek
Alachua, FL 32615

John Tingue
333 Turkey Creek
Alachua, FL 32615

President of TCMOA
1000 Turkey Creek
Alachua, FL 32615

Linda Dixon, AICP
Assistant Director Planning
PO Box 115050
Gainesville, FL 32611

Craig Parenteau
FL Deptarment of Environmental Protection
4801 Camp Ranch Road
Gainesville, FL 32641

Jeannette Hinsdale
P.O. Box 1156
Alachua, FL 32616

Lynn Coullias
7406 NW 126th Ave
Alachua, FL 32615

Lynda Coon
7216 NW 126 Avenue
Alachua, FL 32615

Tamara Robbins
PO Box 2317
Alachua, FL 32616

Dr. Lee A. Niblock
Alachua County Manager
12 SE 1st Street
Gainesville, FL 32601

John Amerson
All County Marion Property Management
2916 NE Jacksonville Rd
Ocala, FL 34479

AFFIDAVIT FOR POSTED LAND USE SIGN

I Melissa WATSON, POSTED THE LAND USE
(Name)
SIGN ON 12-21-16 FOR THE HOLIDAY INN SITE PLAN
(Date) (State type of action and project name)
LAND USE ACTION.

AS PER ARTICLE 2.2.9 D OF THE LAND DEVELOPMENT REGULATIONS.

THIS WILL BE INCLUDED IN THE STAFF REPORT.

Melissa Watson
(Signature)

1
(Number of signs)