City of ALACHUA

THE GOOD LIFE COMMUNITY

FOR PLANNING USE ONLY
Case #:
Application Fee: $
Filing Date:
Acceptance Date:
Review Type: P&Z

Certificate of Appropriateness Application

Reference City of Alachua Land Development Regulations 2.4.6

You must have all information for your application to be considered complete. Incomplete applications will not be accepted.

A. PROJECT TYPE

☐ Demolition ☐ Removal

☒ New Construction ☐ Addition

☒ Alteration of Exterior Features

B. APPLICANT

1. Applicant's Status ☒ Owner (title holder) ☐ Agent
2. Name of Applicant(s) or Contact Person(s): Leroy Hanes Title: OWNER

   Company (if applicable):

   Physical address: 14720 Main Street

   Mailing Address: 14720 Main Street

   City: Alachua State: FL ZIP: 32615
3. If the applicant is agent for the property owner*:

   Name of Owner (title holder):

   Mailing Address:

   City: State: ZIP:

   Telephone: FAX: e-mail:

C. PROPERTY AFFECTED

1. Address of Subject Property: 14720 Main Street
2. Parcel ID Number(s): 03654-000-000 & 03652-000-000
3. Existing Use of Property: Single Family
4. Future Land Use Map Designation:
5. Zoning Designation: CBD
6. Acreage: .5
7. Number of Existing Structures on the Property: 3

D. ATTACHMENTS

1. A detailed drawing which identifies the dimensions of the property, location of existing building(s) and those proposed (if applicable), distances of buildings from property lines, building setback lines (dimensioned), and names of adjacent streets. A current survey or site plan may be submitted to meet this requirement, if all requested information is provided.
2. Set of plans and specifications for the project. All drawings must be clear, concise, and drawn to scale. Plans must include and dimension all exterior elevations and provide a dimensioned floor plan illustrating all rooms within any proposed addition (if applicable).
3. Photographs of existing building(s) (all facades or elevations of building(s) and adjacent buildings). Photographs must clearly illustrate the appearance and conditions of existing building(s) affected by the project, close-up pictures of any specific elements under consideration by the project (for

example, windows or doors if proposed to be removed and/or replaced), as well as photographs depicting such elements and their relation with neighboring buildings.

4. If demolition is proposed, a report from a registered structural engineer stating the condition of the structure.

5. The applicant must provide a report which addresses the following:

   (1) ***Affect Exterior Appearance***

   Whether the proposed action will affect the exterior appearance of the subject land or structure or the appearance of any interior portion specifically identified in any relevant designation ordinance.

   (2) ***Affect Consistent with Historical, Architectural, or Other Relevant Qualities***

   Whether any such affect is consistent with the historical, architectural, or other qualities which the relevant designation ordinance seeks to protect and enforce.

   (3) ***Negative or Positive Impact on Neighboring Lands of Historical Significance***

   Whether the proposed action will have a negative or positive impact on neighboring lands that have historic significance.

   (4) ***Effect of Denial***

   Whether the denial of a Certificate of Appropriateness would deprive the owner of reasonable beneficial use of their land.

   (5) ***Demolition***

   In cases where a Certificate of Appropriateness is proposed for demolition of all or a portion of a Historic Property, the applicant shall demonstrate:

   (a) That no other feasible alternative can be found;

   (b) The extent to which the land may not be beneficially used without approval of the demolition;

   (c) The ability to obtain a reasonable return from the existing structure(s); and

   (d) Whether or not the building, structure, or land contributes to a Historic Overlay (HO) District, or no longer has historical significance.

6. Proof of ownership.

7. Proof of payment of taxes.

8. **Fee.** Please see fee schedule for fee determination. No application shall be accepted for processing until the required application fee is paid in full by the applicant. Any necessary technical review will be billed to the applicant at the rate of the reviewing entity. The invoice shall be paid in full prior to any legislative and/or quasi-judicial action of any kind on the petition, appeal, or development application.

All attachments are required for a complete application. **A completeness review of the application will be conducted within five (5) business days of receipt. If the application is determined to be incomplete, the application will be returned to the applicant.**

I/We certify and acknowledge that:

1. I /We must comply with the current Florida Building Code through the Building Department and obtain any necessary permits prior to receiving a final certificate of occupancy.
2. I/We must comply with the requirements of the Alachua County Fire Marshall.
3. I /We must obtain a Local Business Tax Receipt.
4. I/We must meet parking standards and any use specific standards for the zoning district
5. Falsifying information on this application may result in the Certificate of Appropriateness being revoked.

Signature of Applicant

Signature of Co-applicant

Leroy Hanes

Typed or printed name and title of applicant

Sioban Hanes

Typed or printed name of co-applicant

10/4/17

Date

Oct 4, 2017

Date

State of Florida County of Alachua

The foregoing application is acknowledged before me this 4 day of Oct, 2017 by Leroy Hanes Sioban Hanes who is/are personally known to me, or who has/have produced FL DL as identification.

NOTARY SEAL

KRISTY LEE THORNTON
MY COMMISSION # FF 102560
EXPIRES: March 17, 2018
Bonded Thru Budget Notary Services

Signature of Notary Public, State of Florida

Section 5
HANES CERTIFICATE OF APPROPRIATEESS APPLICATION

1. **Affect Exterior Appearance:**

   This home was built in circa 1920 with an addition added in 2003.
   The location of the garage will be at the rear of the property on the back section of the half acre which is not visible from the public right of way. There are numerous metal buildings and structures in the area.

2. **Affect Consistent with Historical, Architectural, or Other Relevant Qualities:**

   The garage is in line with the home and similar structures on adjacent properties and does not affect the historical or architectural qualities of homes in the district. The garage will not be visible from the public right of way, as it is in the rear portion of the ½ acre.
   There are adjacent metal buildings in the area "See attached photos."

3. **Negative or Positive Impact on Neighboring Lands of Historical Significance:**

   The construction of a garage will add a higher value to the property. There is no negative impact to the area.

4. **Effect of Denial:**

   This is a mixed use commercial property in the Central Business District. This garage is located in the central business district and will be used for my art / woodworking studio. I make wood, metal and PVC art which we plan to sell in the commercial store in the front of the house. This directly impacts my income / quality of life.

5. **Demolition:**
   Proposing to remove: 7x8 (56sqft) plastic building, which is damaged and leaking from a tree limb taken out by the previous owners. 12x25 300sqft metal carport also damaged from tree limbs. 11.5x23.8 273.7sqft portable building which is also has a damaged roof from tree limbs

   None of the existing structures have any Historical, Architectural or Other Relevant Qualities

   Total floor area of existing structures to be removed is 626.7sqft
   Total floor area for the proposed structure is 840sqft

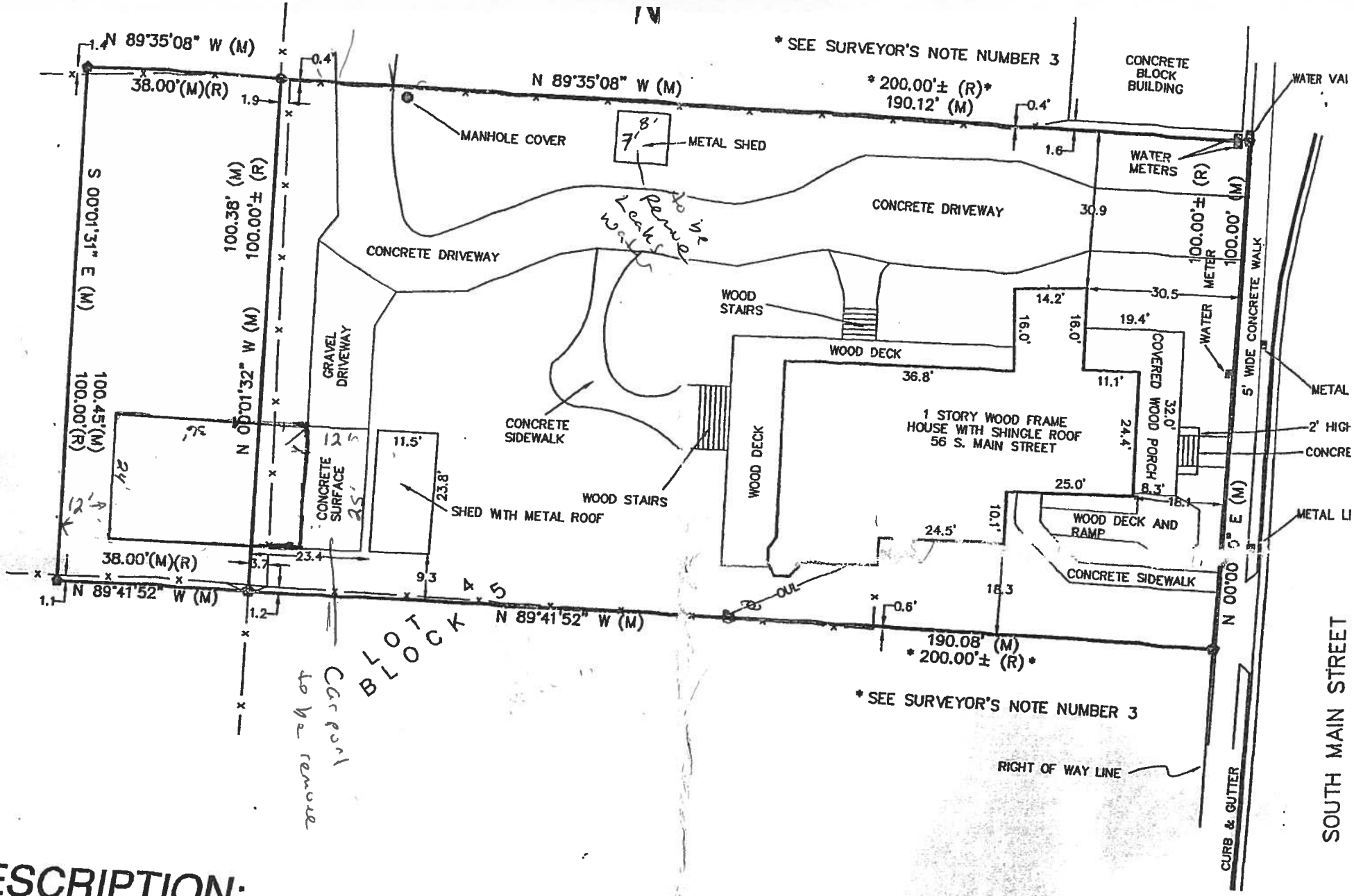

DESCRIPTION:

1 1/2) OF LOT FOUR (4) OF BLOCK FIVE (5)
VEY OF ALACHUA, BEING 100 FEET MORE OR LESS
BY 200 FEET MORE OR LESS EAST AND WEST,
RECORDED IN PLAT BOOK "C", PAGE 79-B OF
S OF ALACHUA COUNTY, FLORIDA.

D BY THIS SUR

N
W E
S

SURVEYOR'S NOTES:

1. THE BEARINGS SHOWN HEREON ARE BASED ON AN ASSUMED BEARING OF N 00°00'00" E ALONG THE RIGHT OF WAY LINE OF SOUTH MAIN STREET AND DOES NOT REFER TO TRUE OR MAGNETIC NORTH
2. FLOOD NOTE: BASED UPON REVIEW OF THE FEDERAL EMERGENCY MANAGEMENT AGENCY FLOOD INSURANCE RATE MAP COMMUNITY PANEL NU 120664 0025 A, WITH A REVISION DATE OF 02/02/96, THE PROPERTY DE ED ON THIS SURVEY IS LOCATED WITHIN ZONE

1

City of Alachua

From: "Leroy Hanes" <lhanes0499@gmail.com>
To: Ahall@cityofalachua.com
Sent: Wednesday, September 27, 2017 4:42:35 PM
Subject: Hanes Certificate of Appropriateness Application

Hello Adam

Thanks so much for your time today.

I have changed the Section 5 statement and attached it along with the photos.

The upstairs has 3 sections
24 sqft 3x8 air conditioned space
20 sqft 4x5 air conditioned space
57 sqft 3x19 non-air-conditioned spaced

The attic space that is air conditioned is
9x22 or 198 Sqft

Leroy Hanes

Zimbra **ad_hall@cityofalachua.org**

Re: Hanes Certificate of Appropriateness Application

From : Leroy Hanes <lhanes0499@gmail.com> Thu, Sep 28, 2017 01:53 PM

Subject : Re: Hanes Certificate of Appropriateness Application

To : Adam Hall <ad_hall@cityofalachua.org>

These areas

24 sqft 3x8 air conditioned space
20 sqft 4x5 air conditioned space
57 sqft 3x19 non-air-conditioned spaced

From: Adam Hall
Sent: Thursday, September 28, 2017 1:35 PM
To: Leroy Hanes
Subject: Re: Hanes Certificate of Appropriateness Application

Leroy:

How much of the finished upstairs area (either conditioned or unconditioned) has a ceiling height of 7' or greater?

Adam Hall

N

N

MN

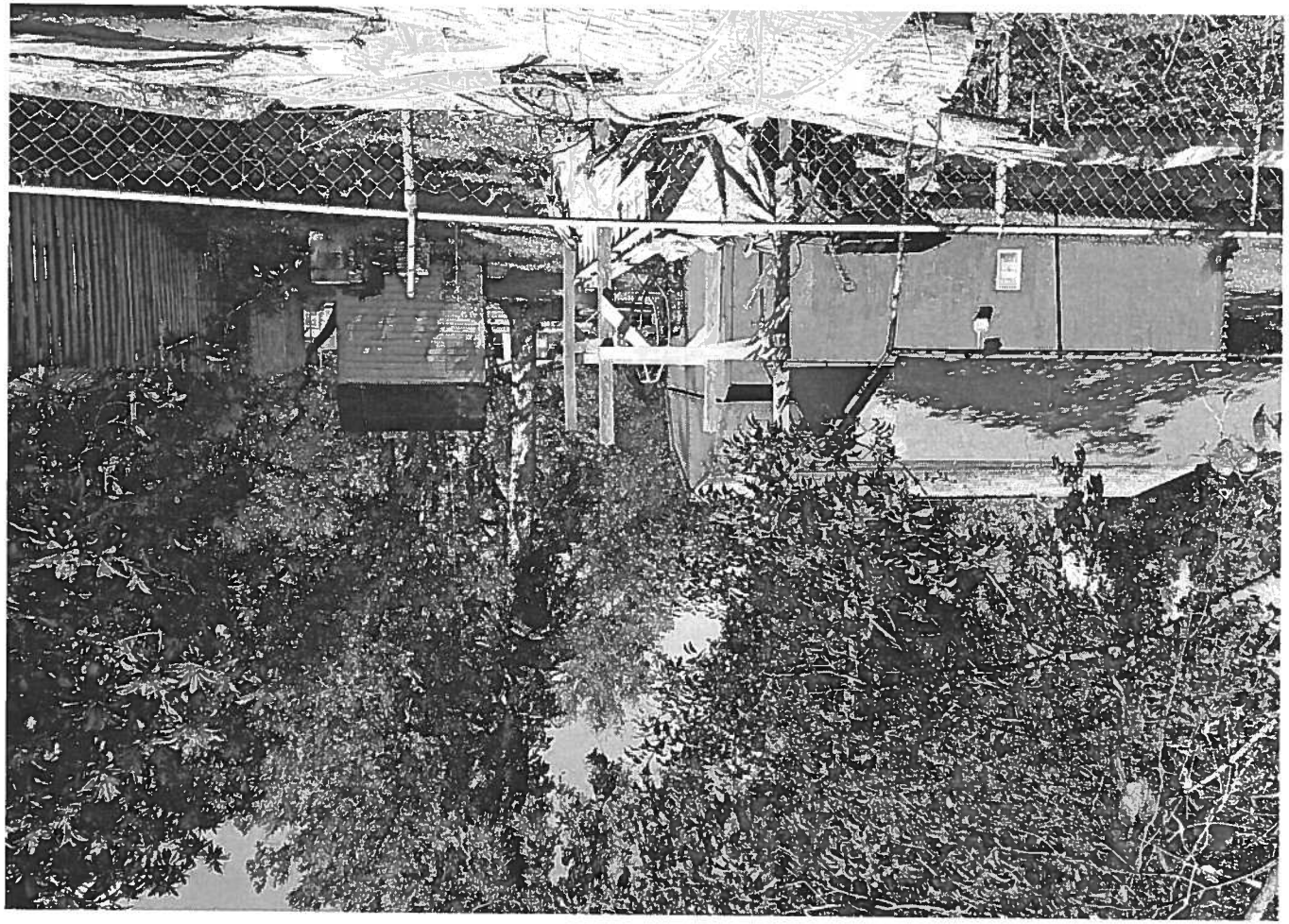

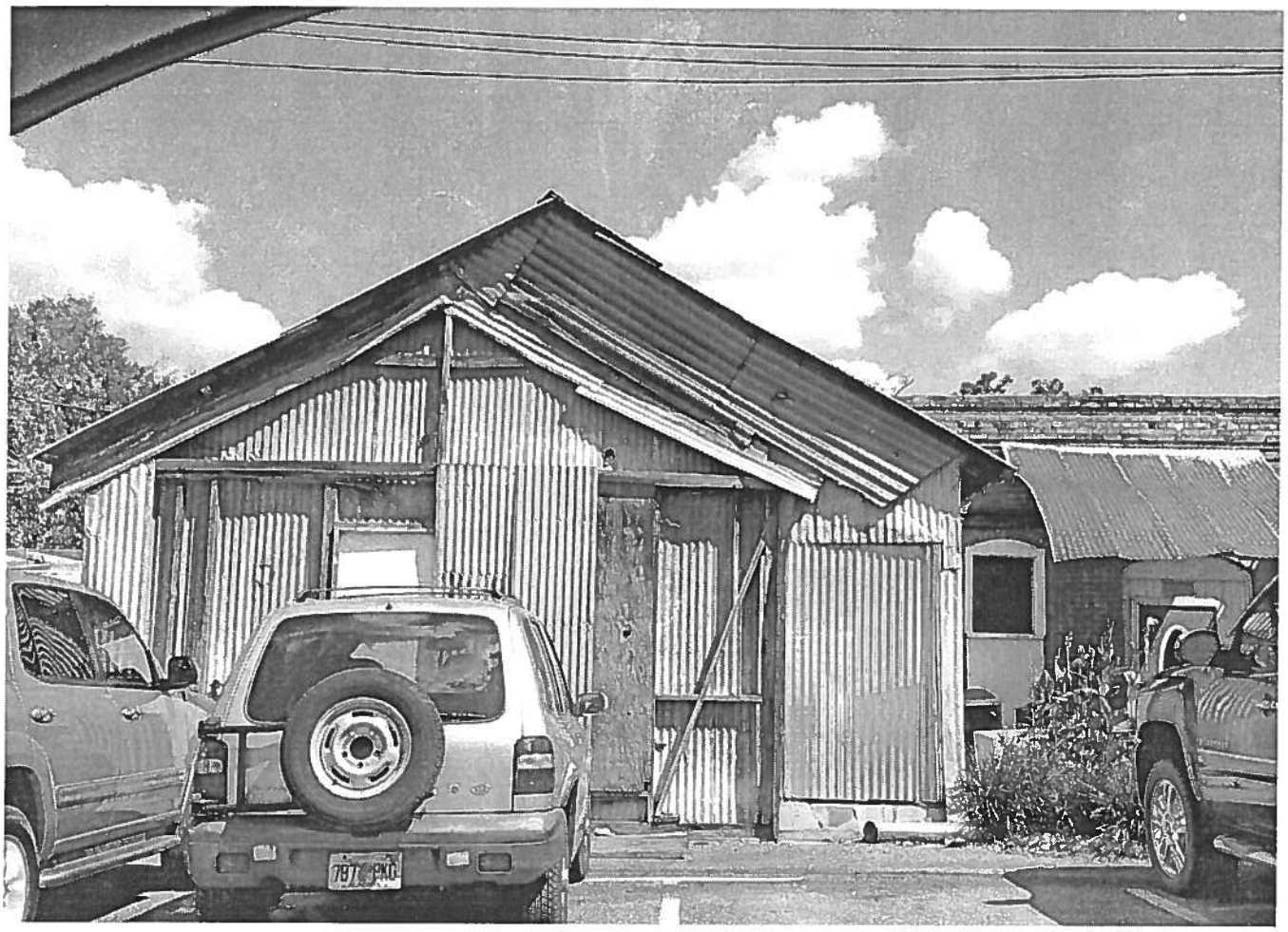

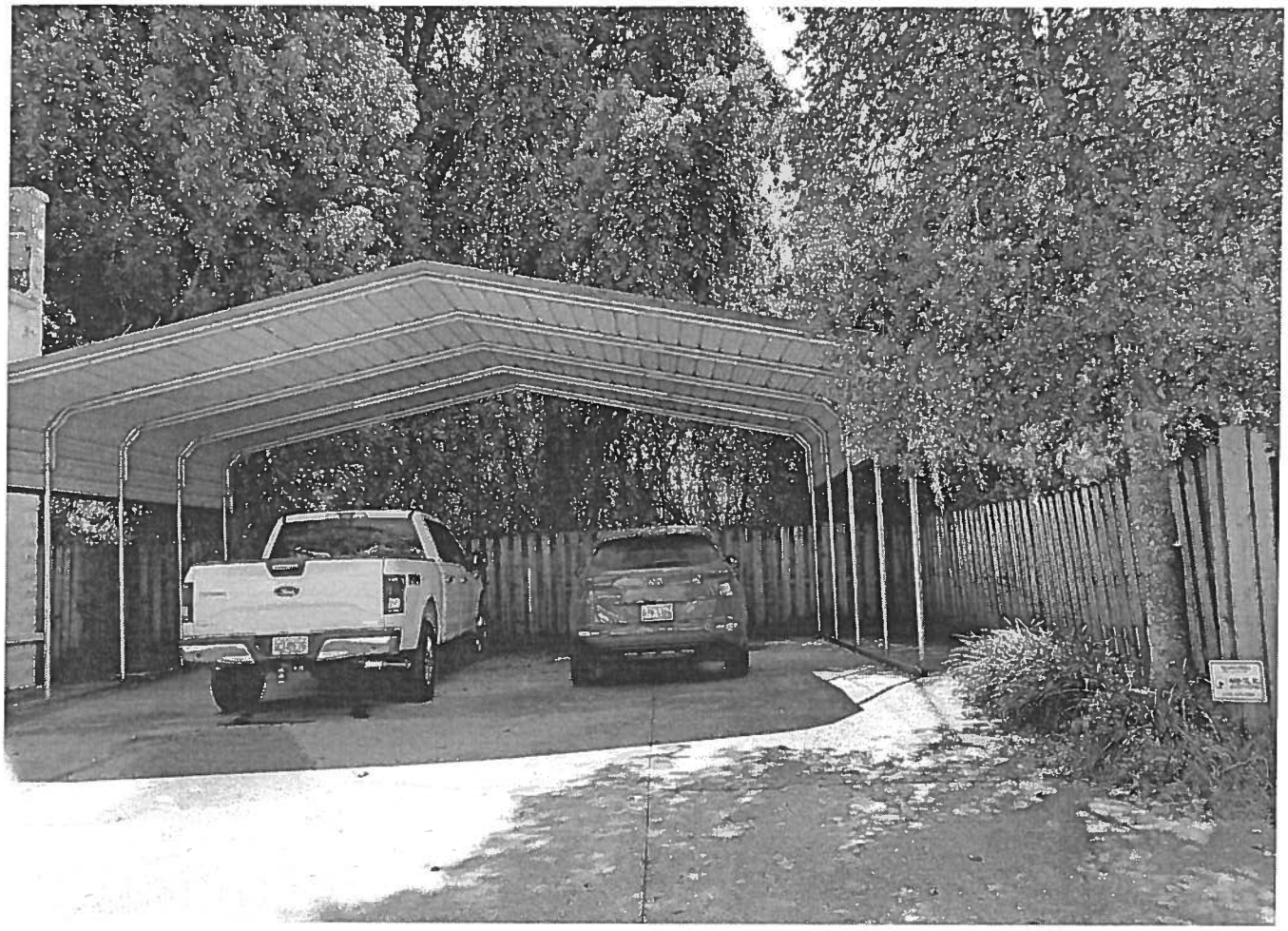

CFR R57
LG

R&B METAL STRUCTURES

TOLL FREE: 866-238-3501
Phone: 770-775-2254 Fax: 770-504-0235
Email orders to: orders@rbmetal.com

Date	7/27/2017
Dealer #	F-217
Phone	352-472-7100

Name Lee Hanes Phone(Day) 352-587-5407
Delivery Address 14720 Main St Cell
Email
City Alachua State FL Zip 32615 Building white
County Alachua Trim Color white

Building Width	Roof Length	Frame Length	Leg Height
24'	36'	35'	9'
- -	⇦Barn		

Non- Certified	Traditional	Vertical Roof
☐	☐	☒
Certified	**A-Frame**	**Vertical Walls**
☒	☒	☐

Below provide a sketch of building:

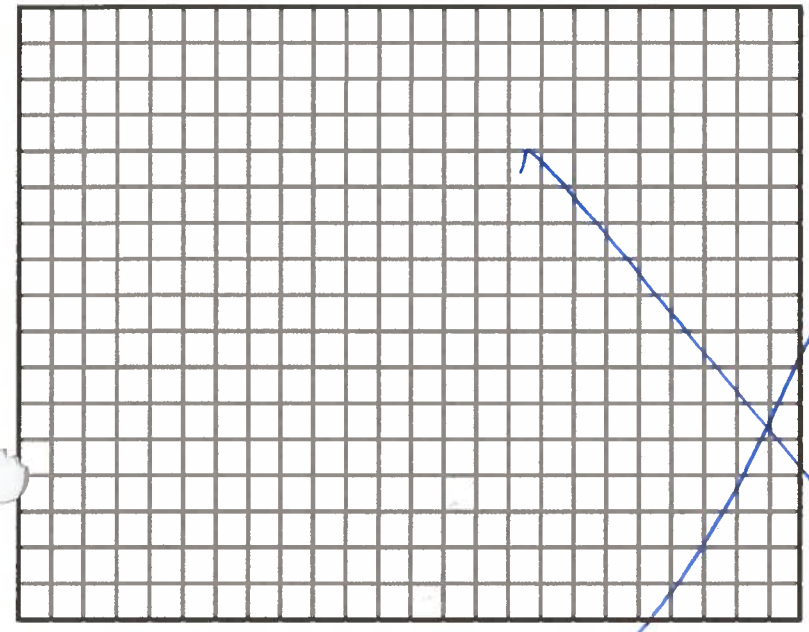

Legend: Walk in door(WD) Window (W) Roll up Door(RUD) Residential Door(RD) Gable (G)

Base Price	$2,995.00
Leg Height	$340.00
Options	
Close Both Sides	$795.00
Close Both Ends	$2,000.00
Vertical Roof	$700.00
RUD mounted on side	$150.00
1- 10x8 Roll up Door	$525.00
1- Walk in Door	$300.00
SUBTOTAL	$7,805.00
CO. SALES TAX	$507.32
Tax % 6.5 TOTAL	$8,312.32
12% Subtotal - Deposit	$937.00
Balance Due When Installed	$7,375.32

Installation Surface provided by customer?

☐ **GROUND** No Warranty if lot is unlevel *Initial*____

☒ **CONCRETE** Slab Size_____x_____ *Initial*____

☐ **OTHER** _____ *Charges may apply*

Are Drawings Required? (Certified Only) ☒ Yes ☐ No

Add $100 per copy for Florida only _____*# of copies*

Limited Warranty ☐

Extended Warranty (Certified Only) ☒

All orders are subject to verification by the main office. If the order is accepted and processed by R&B Metal Structures (Seller) this order becomes a contract between above buyer and seller and is subject to the terms and conditions of this contract on the reverse side. I have read and completely understood the above information and the information on the reverse of this form and by signing I agree to the all of the stated terms and conditions.

Customer Signature:_____

F1000112

After installation we will ask you to sign below acknowledging your satisfaction with the constructed building and the manner in which it was built.

Customer:_____

Installer: _____

THANK YOU FOR YOUR BUSINESS!

Paying by check? - DL#_____Exp. Date_____D.O.B._____

Standard

- 29 Gauge Metal Roofing
- 4 Corner Braces
- 30" Rebar Anchors OR Concrete Anchors

Certified

- 29 Gauge Metal Roofing
- Fully Braced, Certified up to 130MPH Wind Rating & 20PSF Snow Load
- 30" Rebar Anchors AND High Wind Anchors OR Concrete Anchors

Available Options

Walk-In Doors
Windows
Roll-Up Doors
Gables
Side Panels
Vertical Roof
Vertical Sides
Insulation
Skylights
Wainscoting
Interior Paneling
Color Matching Screws
40 Year Metal Upgrade

To view more structures and options, visit our website and take a look at our online catalog.

www.randbmetalstructures.com

STRUCTURAL DESIGN

ENCLOSED BUILDING

MAXIMUM 30'- 0" WIDE X 14'- 0" HEIGHT-
BOX EAVE FRAME AND BOW FRAME

10 February 2017
Revision 1
M&A Project No. 16182S

Prepared for:

R&B Metal Structures
979 Highway 42 South
Jackson, GA 30233

Prepared by:

Moore and Associates Engineering and Consulting, Inc.
1009 East Avenue
North Augusta, SC 29841

2

NORTH CAROLINA PROFESSIONAL SEAL 26784 2/10/17 ENGINEER WAYNE S. MOORE

NORTH CAROLINA Moore and Associates Engineering and Consulting, Inc. No. C-3166 CERTIFICATE OF AUTHORIZATION

WAYNE SHERIDAN MOORE, JR. LICENSED PROFESSIONAL ENGINEER 27323 2/10/17 STATE OF MISSISSIPPI

SOUTH CAROLINA REGISTERED PROFESSIONAL ENGINEER No. 18604 2/10/17 WAYNE S. MOORE

SOUTH CAROLINA MOORE AND ASSOCIATES, INC. No. C02966 CERTIFICATE OF AUTHORIZATION

STATE OF LOUISIANA WAYNE SHERIDAN MOORE License No. 40931 2/10/17 PROFESSIONAL ENGINEER

GEORGIA REGISTERED No. 24069 PROFESSIONAL 2/10/17 ENGINEER WAYNE S. MOORE

WAYNE S. MOORE REGISTERED ENGINEER AGRICULTURE COMMERCE 2/10/17 No. 102025 STATE OF TENNESSEE

ALABAMA LICENSED No. 33416-E PROFESSIONAL 2/10/17 ENGINEER WAYNE SHERIDAN MOORE, JR.

STATE OF KENTUCKY WAYNE S. MOORE 30617 2/10/17 LICENSED PROFESSIONAL ENGINEER

WAYNE S. MOORE LICENSE No. 57370 2/10/17 STATE OF FLORIDA PROFESSIONAL ENGINEER

MOORE AND ASSOCIATES ENGINEERING AND CONSULTING, INC.	DRAWN BY: LT	R&B METAL STRUCTURES 30'x14' ENCLOSED STRUCTURE PE SEAL COVER SHEET	
	CHECKED BY: PDH		
THIS DOCUMENT IS THE PROPERTY OF MOORE AND ASSOCIATES ENGINEERING AND CONSULTING. THE UNAUTHORIZED REPRODUCTION, COPYING, OR OTHERWISE USE OF THIS DOCUMENT IS STRICTLY PROHIBITED AND ANY INFRINGEMENT THEREUPON MAY BE SUBJECT TO LEGAL ACTION.	PROJECT MGR: VSM	DATE: 2-10-17	SCALE: NTS	JOB NO: 161825
	CLIENT: R&B	SHT. 1	DWG. NO: SK-3	REV.: 1

DRAWING INDEX

SHEET 1	PE SEAL COVER SHEET
SHEET 2	DRAWING INDEX
SHEET 3	INSTALLATION NOTES AND SPECIFICATIONS AND TYPICAL SIDE AND END ELEVATIONS
SHEET 4	TYPICAL RAFTER/COLUMN END AND SIDE FRAMING SECTIONS (BOX EAVE RAFTER)
SHEET 5A	24' < W ≤ 30' MAXIMUM RAFTER SPAN CONNECTION DETAILS (BOX EAVE RAFTER)
SHEET 5B	W ≤ 24' MAXIMUM RAFTER SPAN CONNECTION DETAILS (BOX EAVE RAFTER)
SHEET 6	TYPICAL RAFTER/COLUMN END AND SIDE FRAMING SECTIONS (BOW RAFTER)
SHEET 7A	24' < W ≤ 30' MAXIMUM RAFTER SPAN CONNECTION DETAILS (BOW RAFTER)
SHEET 7B	W ≤ 24' MAXIMUM RAFTER SPAN CONNECTION DETAILS (BOW RAFTER)
SHEET 8	BASE RAIL ANCHORAGE OPTIONS
SHEET 9	BOX EAVE RAFTER END WALL AND SIDE WALL OPENINGS
SHEET 10	BOW EAVE RAFTER END WALL AND SIDE WALL OPENINGS
SHEET 11	BOX AND BOW EAVE RAFTER WALL OPENING DETAILS
SHEET 12	BOX AND BOW EAVE RAFTER WALL OPENING DETAILS
SHEET 13	BOX EAVE RAFTER LEAN-TO OPTION
SHEET 14	BOW RAFTER LEAN-TO OPTION
SHEET 15	BOX EAVE RAFTER VERTICAL ROOF OPTION
SHEET 16	LACED HEADER DETAIL

THIS DOCUMENT IS THE PROPERTY OF MOORE AND ASSOCIATES ENGINEERING AND CONSULTING. THE UNAUTHORIZED REPRODUCTION, COPYING, OR OTHERWISE USE OF THIS DOCUMENT IS STRICTLY PROHIBITED AND ANY INFRINGEMENT THEREUPON MAY BE SUBJECT TO LEGAL ACTION.

BOX EAVE FRAME RAFTER STRUCTURE (Sheets 4, 5A, 5B, 8, 9, 11, 12 AND 14)

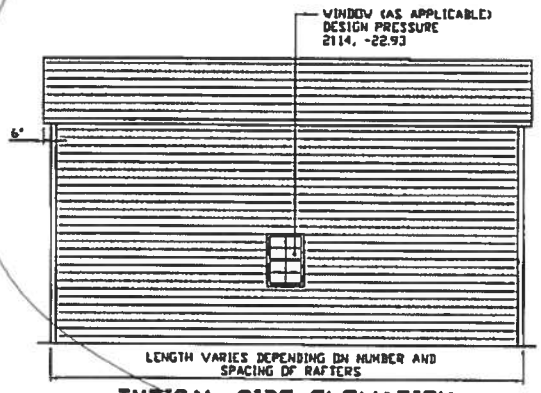

TYPICAL SIDE ELEVATION
SCALE: NTS

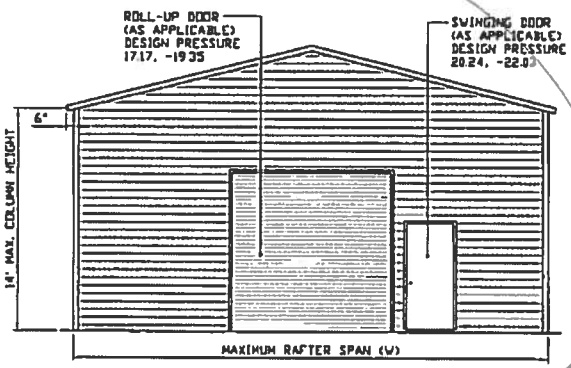

TYPICAL END ELEVATION
SCALE NTS

BOW FRAME RAFTER STRUCTURE (Sheets 6, 7A, 7B, 8, 10, 11 AND 13)

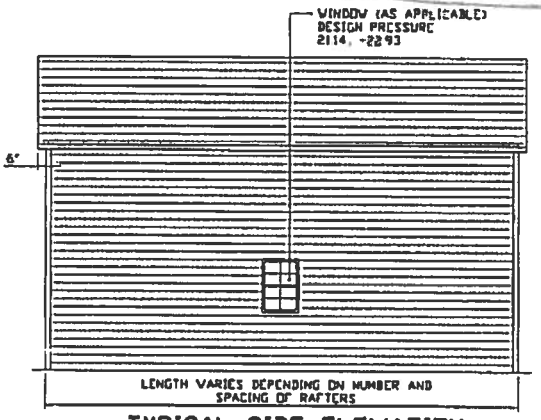

TYPICAL SIDE ELEVATION
SCALE NTS

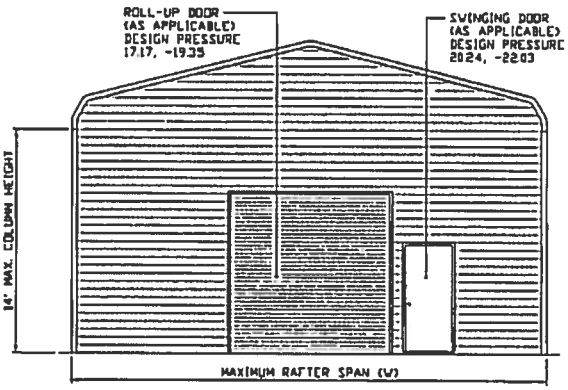

TYPICAL END ELEVATION
SCALE: NTS

INSTALLATION NOTES AND SPECIFICATIONS

1. DESIGN IS FOR MAXIMUM 30' WIDE x 14' EAVE HEIGHT ENCLOSED STRUCTURES
2. DESIGN WAS DONE IN ACCORDANCE WITH THE 2014 FLORIDA BUILDING CODE (FBC) 5TH EDITION, 2012 NORTH CAROLINA BUILDING CODE, 2006 INTERNATIONAL BUILDING CODE (IBC), 2009 IBC, 2012 IBC AND 2015 IBC
3. DESIGN LOADS ARE AS FOLLOWS:
   - A) DEAD LOAD = 15 PSF
   - B) LIVE LOAD = 12 PSF
   - C) GROUND SNOW LOAD = 35 PSF (18' < W ≤ 30)
   - D) GROUND SNOW LOAD = 30 PSF (W < 18)
4. LOW ULTIMATE WIND SPEED (LW) 105 TO 140 MPH (NOMINAL WIND SPEED 81 TO 108 MPH): MAXIMUM RAFTER/POST AND END POST SPACING = 5.0 FEET (UNLESS NOTED OTHERWISE)
5. LOW HAZARD RISK CATEGORY I (WIND)
6. WIND EXPOSURE CATEGORY B
7. SPECIFICATIONS APPLICABLE TO 29 GAUGE METAL PANELS FASTENED DIRECTLY TO 2" x 3" - 14 GAUGE TUBE STEEL (TS) FRAMING MEMBERS (UNLESS NOTED OTHERWISE)
8. AVERAGE FASTENER SPACING ON-CENTERS ALONG RAFTERS OR HAT CHANNELS, AND COLUMNS (INTERIOR OR END) = 10" O.C. (MAX)
9. FASTENERS CONSIST OF #12-14x3/4" SELF-DRILLING FASTENER (SDF), USE CONTROL SEAL WASHER WITH EXTERIOR FASTENERS SPECIFICATIONS APPLICABLE ONLY FOR MEAN ROOF HEIGHT OF 20 FEET OR LESS, AND ROOF SLOPES OF 14° (3:12 PITCH) OR LESS SPACING REQUIREMENTS FOR OTHER ROOF HEIGHTS AND/OR SLOPES MAY VARY.
10. GROUND ANCHORS SHALL BE INSTALLED THROUGH BASE RAIL WITHIN 6" OF EACH RAFTER COLUMN ALONG SIDES
11. GROUND ANCHORS CONSIST OF #4 REBAR W/ WELDED NUT x 30" LONG IN SUITABLE SOIL CONDITIONS OPTIONAL ANCHORAGE MAY BE USED IN SUITABLE SOILS AND MUST BE USED IN UNSUITABLE SOILS AS NOTED.
12. WIND FORCES GOVERN OVER SEISMIC FORCES SEISMIC PARAMETERS ANALYZED ARE
    SOIL SITE CLASS = D
    RISK CATEGORY I/II/III
    $R = 3.25$ $I_E = 1.0$
    $S_{DS} = 1.522$ $V = C_S W$
    $S_{D1} = 0.839$

MOORE AND ASSOCIATES ENGINEERING AND CONSULTING, INC.	DRAWN BY: LT	R&B METAL STRUCTURES 979 HIGHWAY 42 SOUTH JACKSON, GA 30233 30'x14' ENCLOSED STRUCTURE		
	CHECKED BY: PDH			
THIS DOCUMENT IS THE PROPERTY OF MOORE AND ASSOCIATES ENGINEERING AND CONSULTING. THE UNAUTHORIZED REPRODUCTION, COPYING, OR OTHERWISE USE OF THIS DOCUMENT IS STRICTLY PROHIBITED AND ANY INFRINGEMENT THEREUPON MAY BE SUBJECT TO LEGAL ACTION.	PROJECT MGR: WSH	DATE: 2-10-17	SCALE: NTS	JOB NO: 16182S
	CLIENT: R&B	SHT. 3	DWG. NO: SK-3	REV.: 1

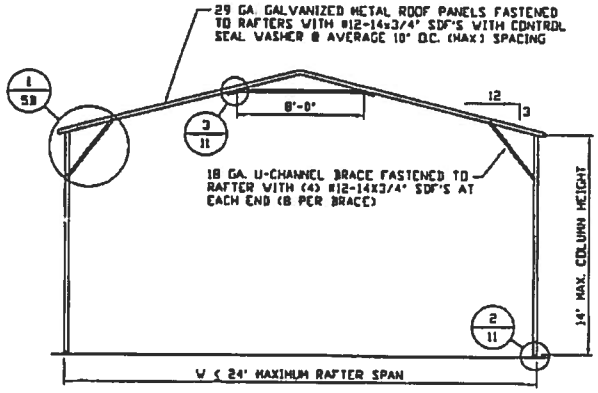

TYPICAL RAFTER/COLUMN END FRAME SECTION

SCALE: NTS

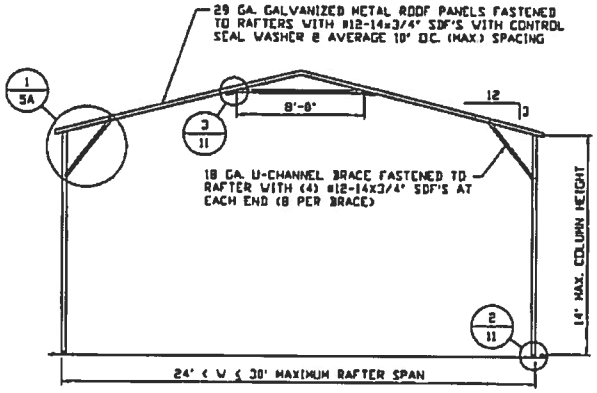

TYPICAL RAFTER/COLUMN END FRAME SECTION

SCALE: NTS

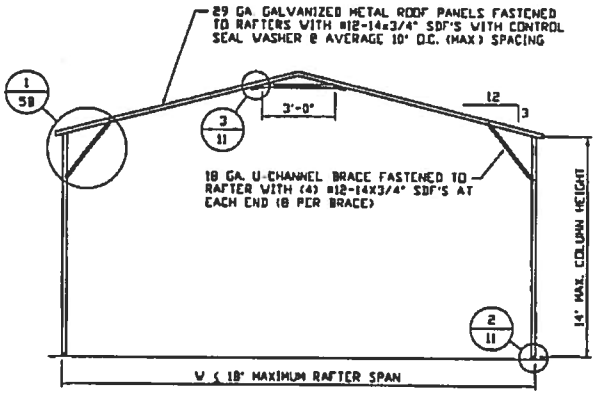

TYPICAL RAFTER/COLUMN END FRAME SECTION

SCALE: NTS

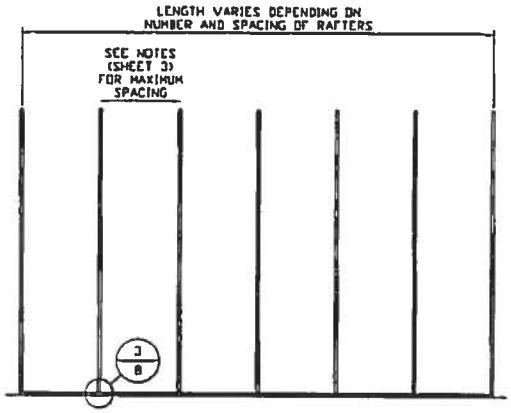

TYPICAL RAFTER/COLUMN SIDE FRAMING SECTION

SCALE NTS

MOORE AND ASSOCIATES ENGINEERING AND CONSULTING, INC.	DRAWN BY: LT	R&B METAL STRUCTURES 979 HIGHWAY 42 SOUTH JACKSON, GA 30233 30'x14' ENCLOSED STRUCTURE		
	CHECKED BY: PDH			
	PROJECT MGR: WSM	DATE: 2-10-17	SCALE: NTS	JOB NO: 161825
	CLIENT: R&B	SHT. 4	DWG. NO: SK-3	REV: 1

THIS DOCUMENT IS THE PROPERTY OF MOORE AND ASSOCIATES ENGINEERING AND CONSULTING. THE UNAUTHORIZED REPRODUCTION, COPYING, OR OTHERWISE USE OF THIS DOCUMENT IS STRICTLY PROHIBITED AND ANY INFRINGEMENT THEREUPON MAY BE SUBJECT TO LEGAL ACTION.

24' < W ≤ 30' MAXIMUM RAFTER SPAN

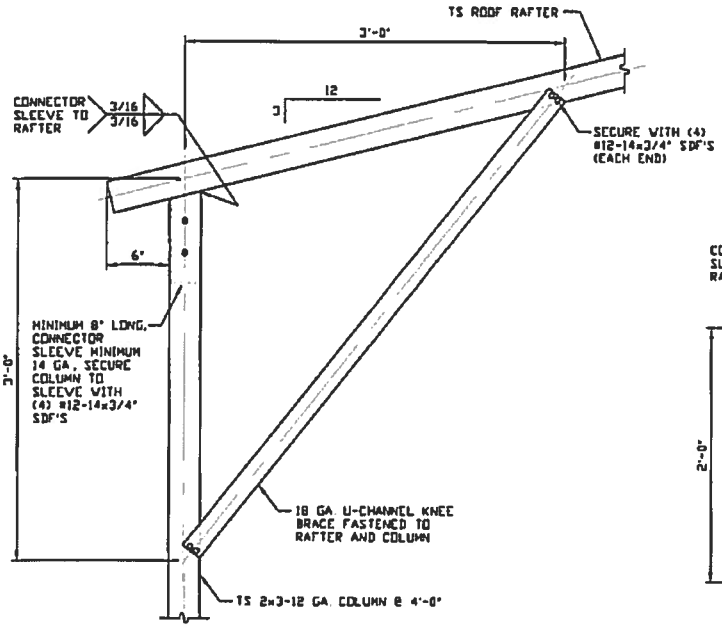

1A BOX EAVE RAFTER COLUMN CONNECTION DETAIL HEIGHTS 14' ≥ TO > 12'

SCALE: NTS

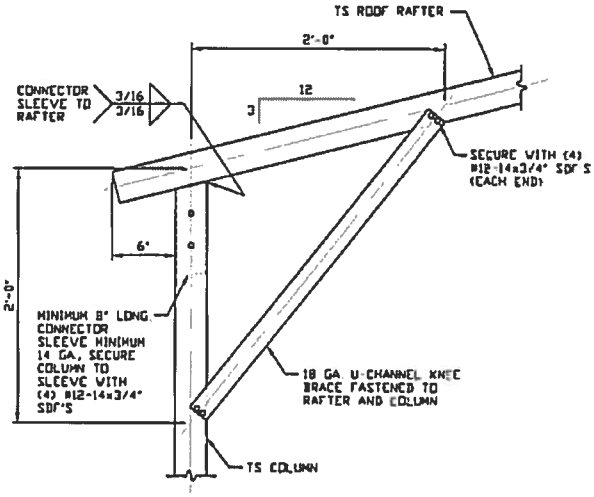

1C BOX EAVE RAFTER COLUMN CONNECTION DETAIL HEIGHTS ≤ 10'

SCALE: NTS

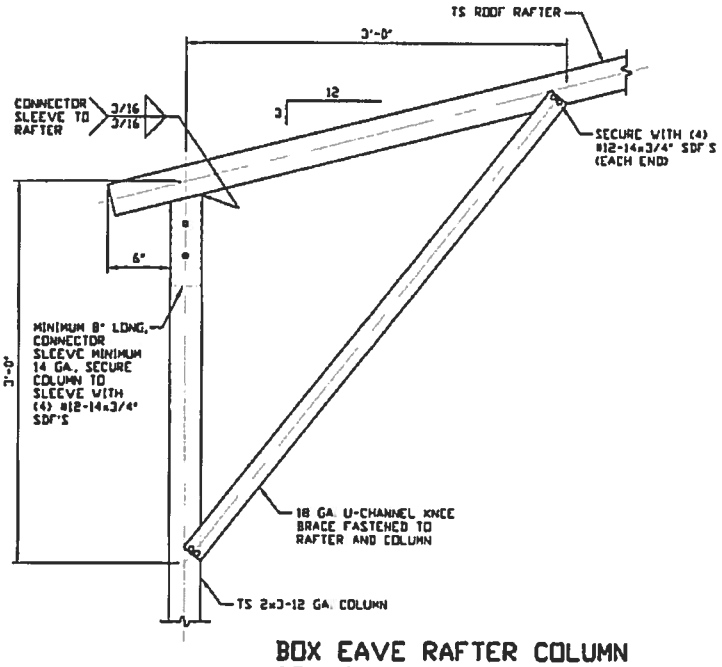

1B BOX EAVE RAFTER COLUMN CONNECTION DETAIL HEIGHTS 12' ≥ TO > 10'

SCALE: NTS

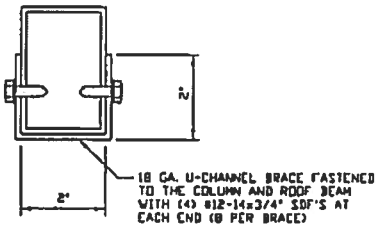

BRACE SECTION

SCALE: NTS

MOORE AND ASSOCIATES ENGINEERING AND CONSULTING, INC.	DRAWN BY: LT	R&B METAL STRUCTURES 979 HIGHWAY 42 SOUTH JACKSON, GA 30233 30'x14' ENCLOSED STRUCTURE		
	CHECKED BY: PDH			
THIS DOCUMENT IS THE PROPERTY OF MOORE AND ASSOCIATES ENGINEERING AND CONSULTING. THE UNAUTHORIZED REPRODUCTION, COPYING, OR OTHERWISE USE OF THIS DOCUMENT IS STRICTLY PROHIBITED AND ANY INFRINGEMENT THEREUPON MAY BE SUBJECT TO LEGAL ACTION.	PROJECT MGR: WSM	DATE: 2-10-17	SCALE: NTS	JOB NO: 161825
	CLIENT: R&B	SHT. 5A	DWG. NO: SK-3	REV.: 1

W ≤ 24' MAXIMUM RAFTER SPAN

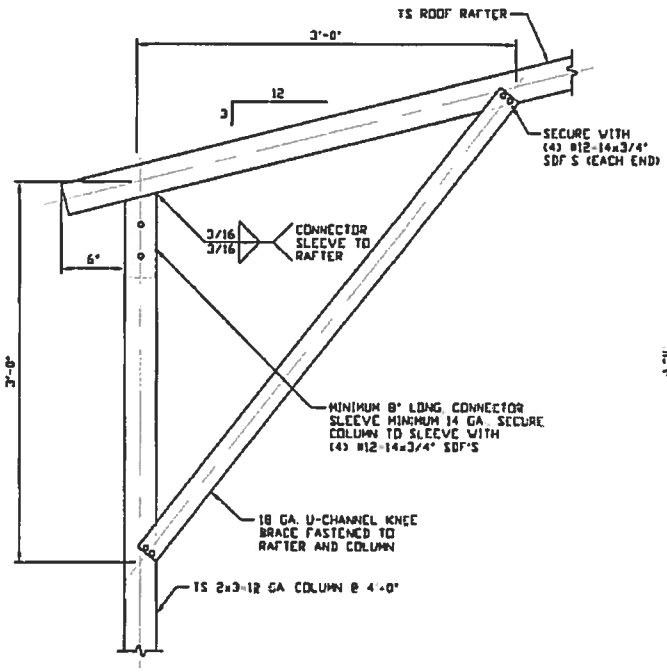

1A BOX EAVE RAFTER COLUMN CONNECTION DETAIL HEIGHTS 14' ≥ TO > 12'
SCALE: NTS

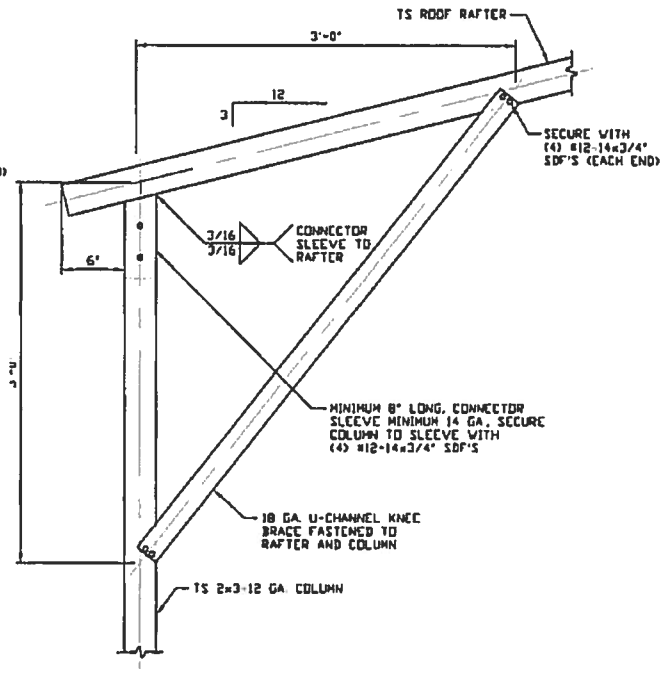

1B BOX EAVE RAFTER COLUMN CONNECTION DETAIL HEIGHTS 12' ≥ TO > 10'
SCALE: NTS

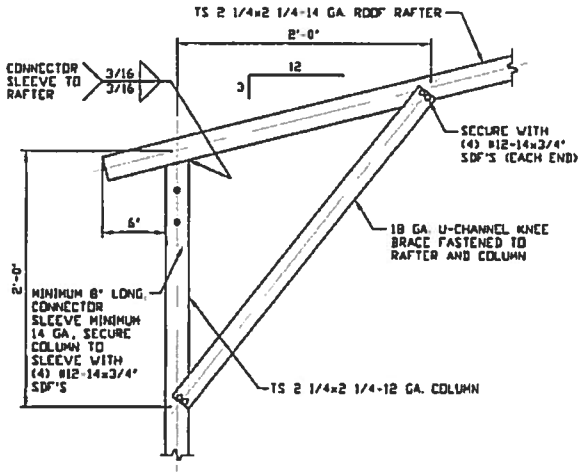

1C BOX EAVE RAFTER COLUMN CONNECTION DETAIL HEIGHTS 10' ≥ TO > 8'
SCALE: NTS

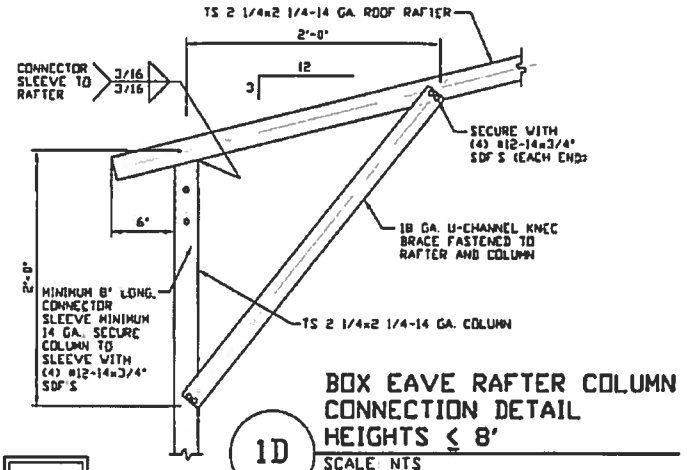

1D BOX EAVE RAFTER COLUMN CONNECTION DETAIL HEIGHTS ≤ 8'
SCALE: NTS

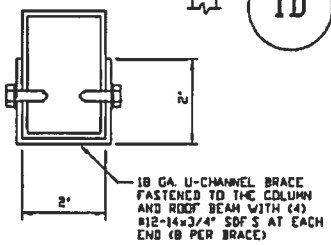

BRACE SECTION
SCALE: NTS

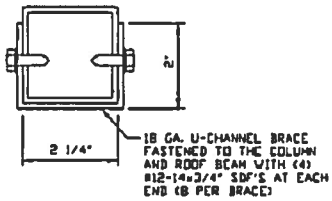

BRACE SECTION
SCALE: NTS

MOORE AND ASSOCIATES ENGINEERING AND CONSULTING, INC.	DRAWN BY: LT	R&B METAL STRUCTURES 979 HIGHWAY 42 SOUTH JACKSON, GA 30233 30'x14' ENCLOSED STRUCTURE		
	CHECKED BY: PDH			
	PROJECT MGR: VSM	DATE: 2-10-17	SCALE: NTS	JOB NO: 161825
	CLIENT: R&B	SHT. 5B	DWG. NO: SK-3	REV: 1

THIS DOCUMENT IS THE PROPERTY OF MOORE AND ASSOCIATES ENGINEERING AND CONSULTING. THE UNAUTHORIZED REPRODUCTION, COPYING, OR OTHERWISE USE OF THIS DOCUMENT IS STRICTLY PROHIBITED AND ANY INFRINGEMENT THEREUPON MAY BE SUBJECT TO LEGAL ACTION.

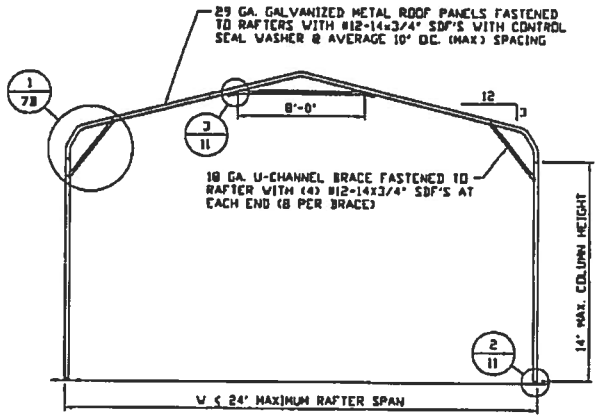

TYPICAL RAFTER/COLUMN END FRAME SECTION

SCALE: NTS

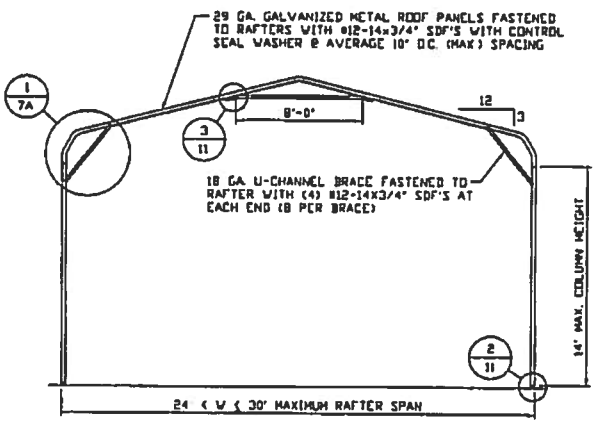

TYPICAL RAFTER/COLUMN END FRAME SECTION

SCALE: NTS

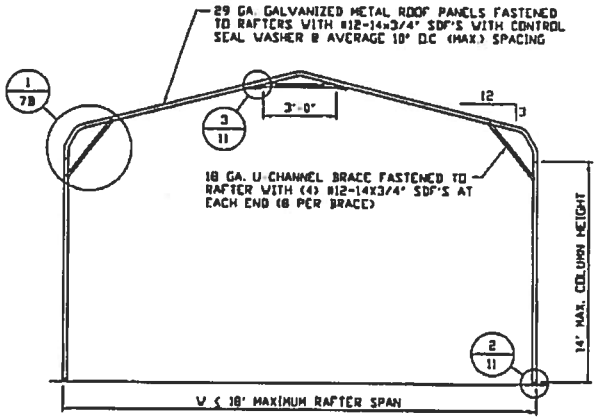

TYPICAL RAFTER/COLUMN END FRAME SECTION

SCALE: NTS

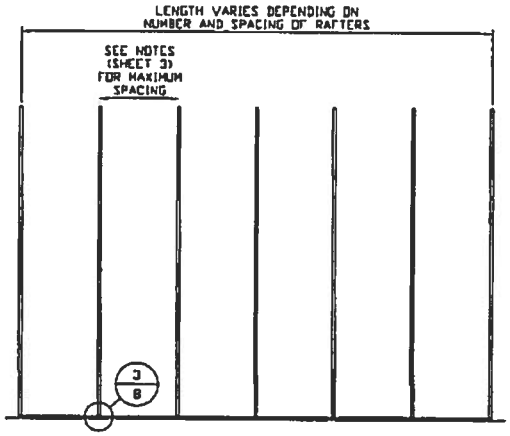

TYPICAL RAFTER/COLUMN SIDE FRAMING SECTION

SCALE: NTS

MOORE AND ASSOCIATES ENGINEERING AND CONSULTING, INC.	DRAWN BY: LT	R&B METAL STRUCTURES 979 HIGHWAY 42 SOUTH JACKSON, GA 30233 30'x14' ENCLOSED STRUCTURE		
	CHECKED BY: PDM			
THIS DOCUMENT IS THE PROPERTY OF MOORE AND ASSOCIATES ENGINEERING AND CONSULTING. THE UNAUTHORIZED REPRODUCTION, COPYING, OR OTHERWISE USE OF THIS DOCUMENT IS STRICTLY PROHIBITED AND ANY INFRINGEMENT THEREUPON MAY BE SUBJECT TO LEGAL ACTION.	PROJECT MGR: WSM	DATE: 2-10-17	SCALE: NTS	JOB NO: 16182S
	CLIENT: R&B	SHT. 6	DWG. NO: SK-3	REV: 1

24' < W ≤ 30' MAXIMUM RAFTER SPAN

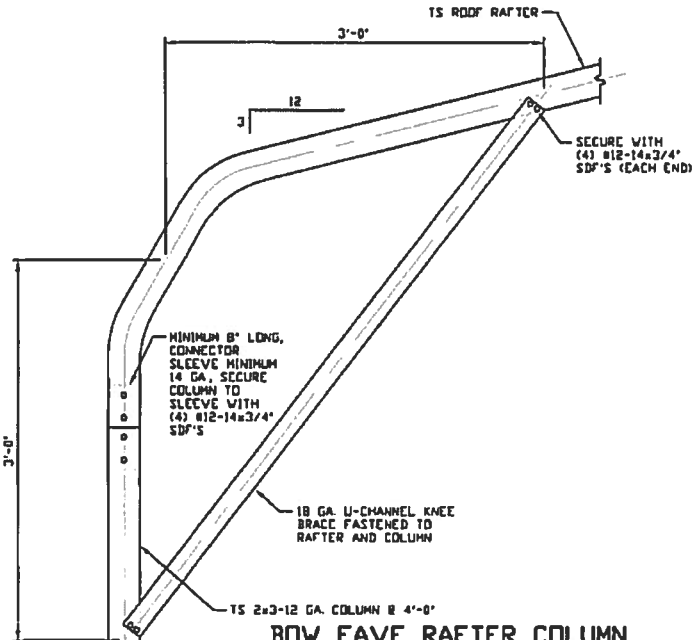

1A BOW EAVE RAFTER COLUMN CONNECTION DETAIL HEIGHTS 14' ≥ TO > 12'
SCALE: NTS

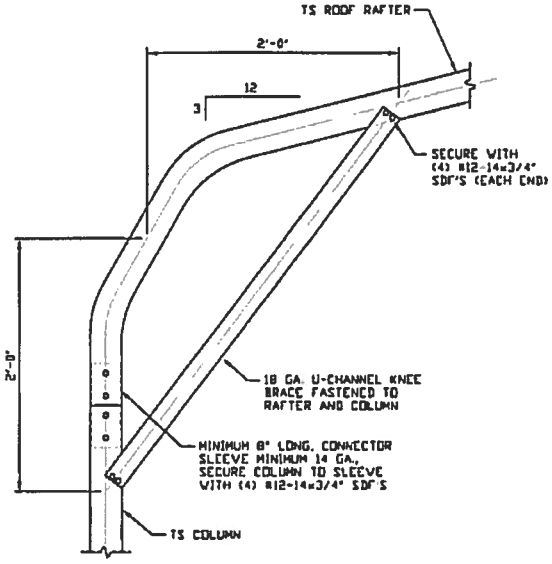

1C BOW EAVE RAFTER COLUMN CONNECTION DETAIL HEIGHTS ≤ 10'
SCALE: NTS

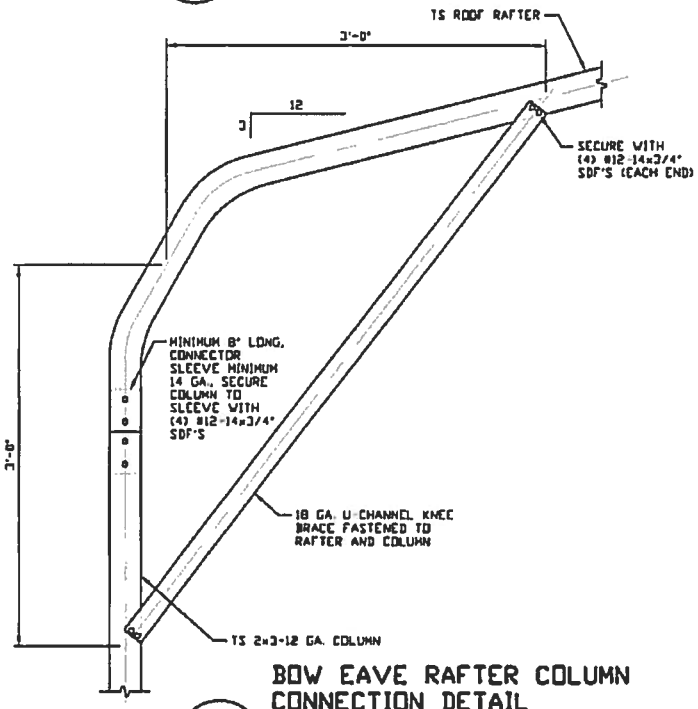

1B BOW EAVE RAFTER COLUMN CONNECTION DETAIL HEIGHTS 12' ≥ TO > 10'
SCALE: NTS

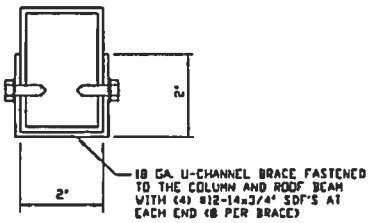

BRACE SECTION
SCALE: NTS

MOORE AND ASSOCIATES ENGINEERING AND CONSULTING, INC.	DRAWN BY: LT	R&B METAL STRUCTURES 979 HIGHWAY 42 SOUTH JACKSON, GA 30233 30'x14' ENCLOSED STRUCTURE		
	CHECKED BY: PDH			
	PROJECT MGR: WSM	DATE: 2-10-17	SCALE: NTS	JOB NO: 161825
	CLIENT: R&B	SHT. 7A	DWG. NO: SK-3	REV: 1

THIS DOCUMENT IS THE PROPERTY OF MOORE AND ASSOCIATES ENGINEERING AND CONSULTING. THE UNAUTHORIZED REPRODUCTION, COPYING, OR OTHERWISE USE OF THIS DOCUMENT IS STRICTLY PROHIBITED AND ANY INFRINGEMENT THEREUPON MAY BE SUBJECT TO LEGAL ACTION.

W ≤ 24' MAXIMUM RAFTER SPAN

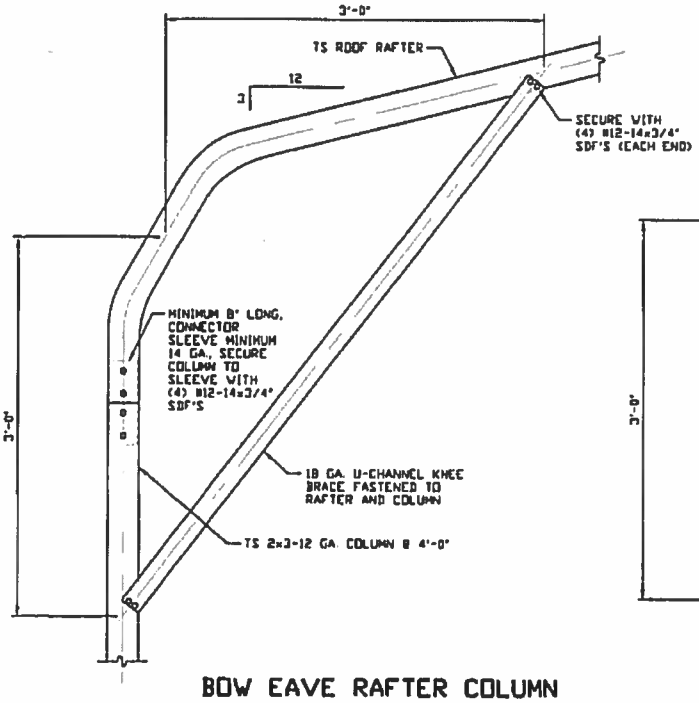

BOW EAVE RAFTER COLUMN CONNECTION DETAIL
HEIGHTS 14' ≥ TO > 12'
1A
SCALE: NTS

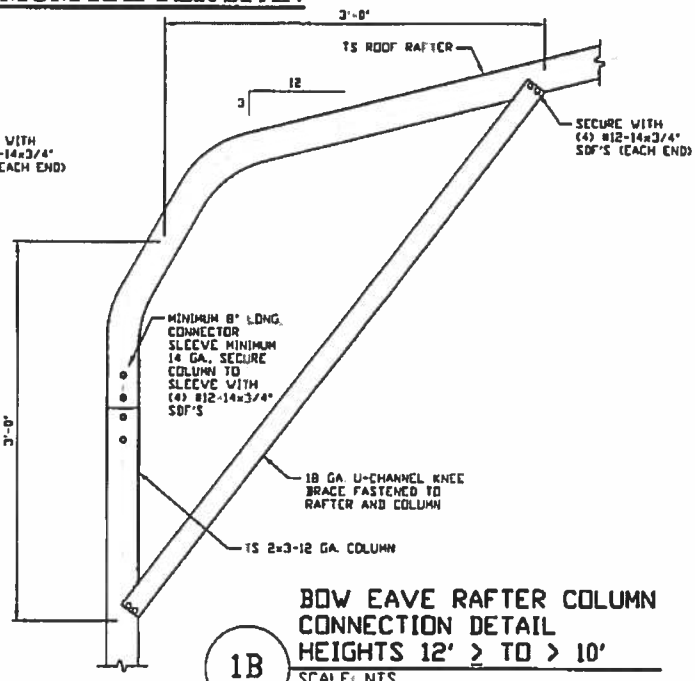

BOW EAVE RAFTER COLUMN CONNECTION DETAIL
HEIGHTS 12' ≥ TO > 10'
1B
SCALE: NTS

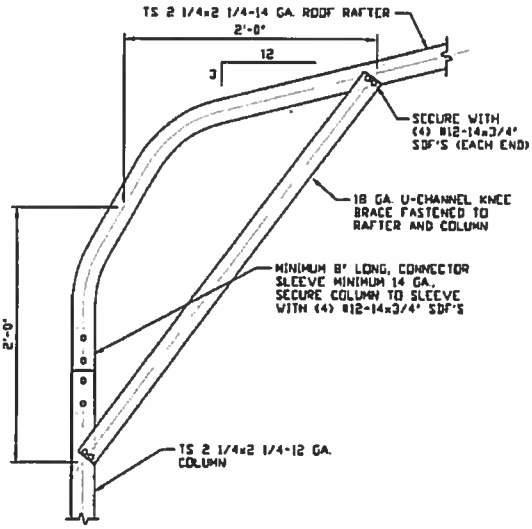

BOW EAVE RAFTER COLUMN CONNECTION DETAIL
HEIGHTS 10' ≥ TO > 8'
1C
SCALE: NTS

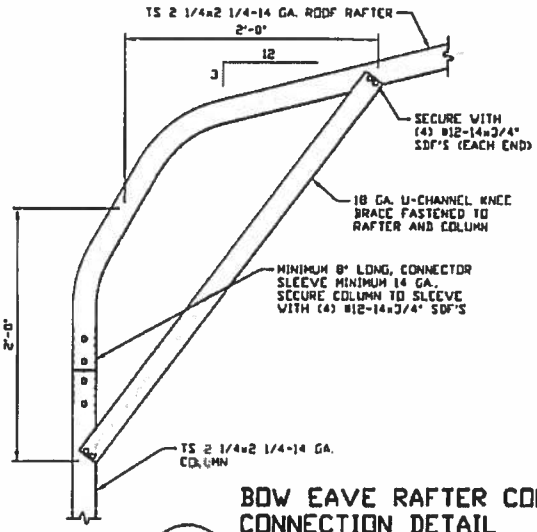

BOW EAVE RAFTER COLUMN CONNECTION DETAIL
HEIGHTS ≤ 8'
1D
SCALE: NTS

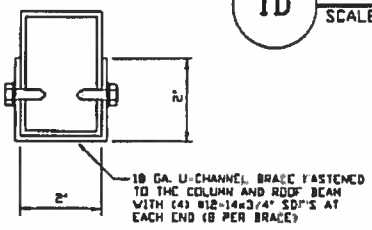

BRACE SECTION
SCALE: NTS

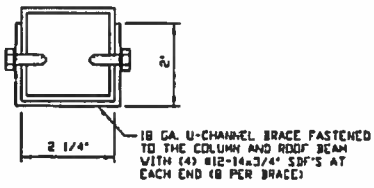

BRACE SECTION
SCALE: NTS

MOORE AND ASSOCIATES
ENGINEERING AND CONSULTING, INC.

THIS DOCUMENT IS THE PROPERTY OF MOORE AND ASSOCIATES ENGINEERING AND CONSULTING. THE UNAUTHORIZED REPRODUCTION, COPYING, OR OTHERWISE USE OF THIS DOCUMENT IS STRICTLY PROHIBITED AND ANY INFRINGEMENT THEREUPON MAY BE SUBJECT TO LEGAL ACTION.

DRAWN BY: LT	R&B METAL STRUCTURES 979 HIGHWAY 42 SOUTH JACKSON, GA 30233 30'x14' ENCLOSED STRUCTURE		
CHECKED BY: PDH			
PROJECT MGR: WSM	DATE: 2-10-17	SCALE: NTS	JOB NO: 16182S
CLIENT: R&B	SHT. 7B	DWG. NO: SK-3	REV: 1

BASE RAIL ANCHORAGE OPTIONS FOR LOW WIND SPEEDS

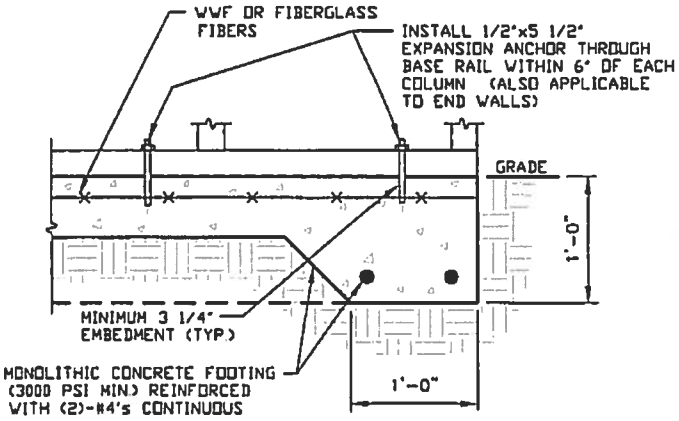

3A CONCRETE MONOLITHIC SLAB BASE RAIL ANCHORAGE
SCALE: NTS
NOTE: MIN ANCHOR EDGE DISTANCE IS 2"

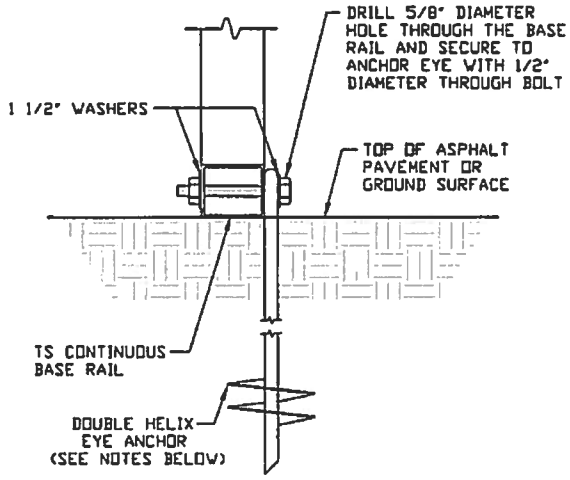

3B GROUND BASE HELIX ANCHORAGE
SCALE: NTS (CAN BE USED FOR ASPHALT)

GENERAL NOTES

CONCRETE:
CONCRETE SHALL HAVE A MINIMUM SPECIFIED COMPRESSIVE STRENGTH OF 3,000 PSI AT 28 DAYS

COVER OVER REINFORCING STEEL:
FOR FOUNDATIONS, MINIMUM CONCRETE COVER OVER REINFORCING BARS SHALL BE PER ACI-318
3" IN FOUNDATIONS WHERE THE CONCRETE IS CAST AGAINST AND PERMANENTLY IN CONTACT WITH THE EARTH OR EXPOSED TO THE EARTH OR WEATHER, AND 1 1/2" ELSEWHERE.

REINFORCING STEEL:
THE TURNDOWN REINFORCING STEEL SHALL BE ASTM A615 GRADE 60. THE SLAB REINFORCEMENT SHALL BE WELDED WIRE FABRIC MEETING ASTM A185 OR FIBERGLASS FIBER REINFORCEMENT

REINFORCEMENT MAY BE BENT IN THE SHOP OR THE FIELD PROVIDED:
1. REINFORCEMENT IS BENT COLD
2. THE DIAMETER OF THE BEND, MEASURED ON THE INSIDE OF THE BAR, IS NOT LESS THAN SIX-BAR DIAMETERS
3. REINFORCEMENT PARTIALLY EMBEDDED IN CONCRETE SHALL NOT BE FIELD BENT.

HELIX ANCHOR NOTES:
1. FOR VERY DENSE AND/OR CEMENTED SANDS, COARSE GRAVEL AND COBBLES, CALICHE, PRELOADED SILTS AND CLAYS, USE MINIMUM (2) 4" HELICES WITH MINIMUM 30" EMBEDMENT OR SINGLE 6" HELIX WITH MINIMUM 50" EMBEDMENT
2. FOR CORAL USE MINIMUM (2) 4" HELICES WITH MINIMUM 30" EMBEDMENT OR SINGLE 6" HELIX WITH MINIMUM 50" EMBEDMENT.
3. FOR MEDIUM DENSE COARSE SANDS, SANDY GRAVELS, VERY STIFF SILTS, AND CLAYS USE MINIMUM (2) 4" HELICES WITH MINIMUM 30 INCH EMBEDMENT OR SINGLE 6" HELIX WITH MINIMUM 50" EMBEDMENT.
4. FOR LOOSE TO MEDIUM DENSE SANDS, FIRM TO STIFF CLAYS AND SILTS ALLUVIAL FILL, USE MINIMUM (2) 6" HELICES WITH MINIMUM 50" EMBEDMENT.
5. FOR VERY LOSE TO MEDIUM DENSE SANDS, FIRM TO STIFFER CLAYS AND SILTS, ALLUVIAL FILL, USE MINIMUM (2) 8" HELICES WITH MINIMUM 60" EMBEDMENT.

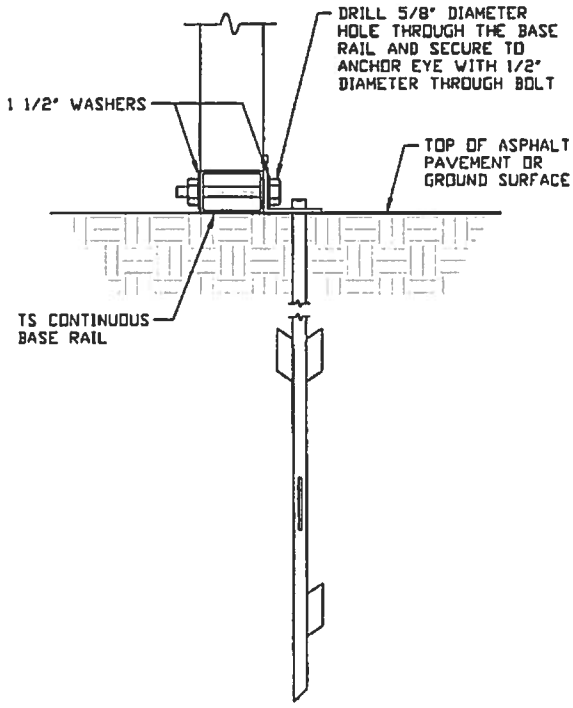

3C ASPHALT BASE ANCHORAGE
SCALE: NTS

MOORE AND ASSOCIATES ENGINEERING AND CONSULTING, INC.	DRAWN BY: LT	R&B METAL STRUCTURES 979 HIGHWAY 42 SOUTH JACKSON, GA 30233 30'x14' ENCLOSED STRUCTURE	
	CHECKED BY: PDH		
	PROJECT MGR: WSM	DATE: 2-10-17	SCALE: NTS	JOB NO: 161825
	CLIENT: R&B	SHT. 8	DWG. NO: SK-3	REV: 1

THIS DOCUMENT IS THE PROPERTY OF MOORE AND ASSOCIATES ENGINEERING AND CONSULTING. THE UNAUTHORIZED REPRODUCTION, COPYING, OR OTHERWISE USE OF THIS DOCUMENT IS STRICTLY PROHIBITED AND ANY INFRINGEMENT THEREUPON MAY BE SUBJECT TO LEGAL ACTION.

BOX EAVE RAFTER END WALL AND SIDE WALL OPENINGS

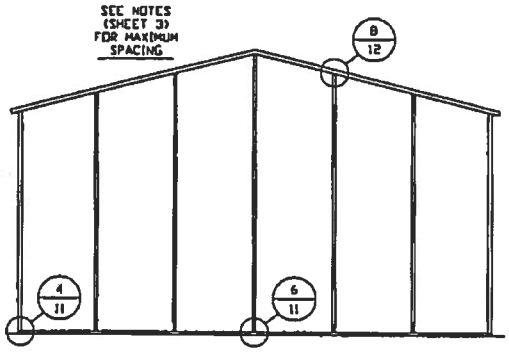

TYPICAL BOX EAVE RAFTER END WALL FRAMING SECTION

SCALE: NTS

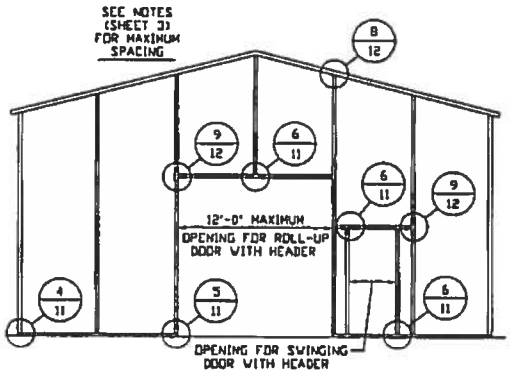

TYPICAL BOX EAVE RAFTER END WALL OPENING FRAMING SECTION

SCALE: NTS

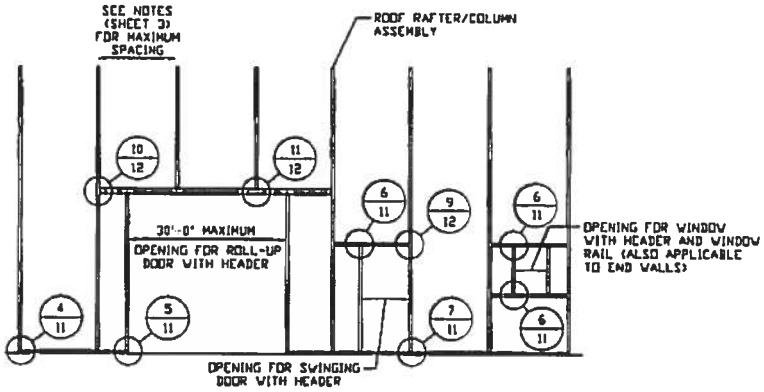

TYPICAL BOX EAVE RAFTER SIDE WALL OPENINGS FRAMING SECTION

SCALE: NTS

MOORE AND ASSOCIATES ENGINEERING AND CONSULTING, INC.	DRAWN BY: LT	R&B METAL STRUCTURES 979 HIGHWAY 42 SOUTH JACKSON, GA 30233 30'x14' ENCLOSED STRUCTURE		
	CHECKED BY: PDH			
THIS DOCUMENT IS THE PROPERTY OF MOORE AND ASSOCIATES ENGINEERING AND CONSULTING. THE UNAUTHORIZED REPRODUCTION, COPYING, OR OTHERWISE USE OF THIS DOCUMENT IS STRICTLY PROHIBITED AND ANY INFRINGEMENT THEREUPON MAY BE SUBJECT TO LEGAL ACTION.	PROJECT MGR: WSM	DATE: 2-10-17	SCALE: NTS	JOB NO: 16182S
	CLIENT: R&B	SHT. 9	DWG. NO: SX-3	REV.: 1

BOW EAVE RAFTER END WALL AND SIDE WALL OPENINGS

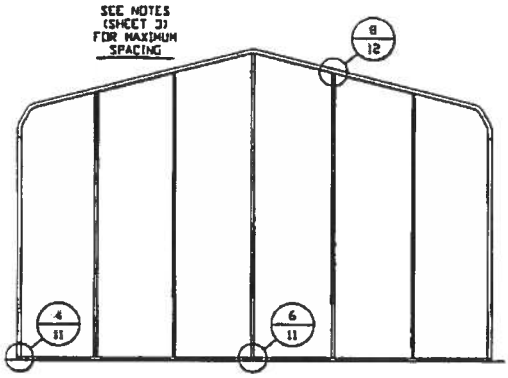

TYPICAL BOW EAVE RAFTER END WALL FRAMING SECTION

SCALE: NTS

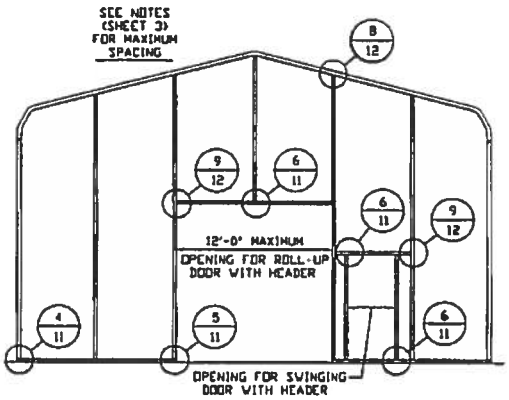

TYPICAL BOW EAVE RAFTER END WALL OPENING FRAMING SECTION

SCALE: NTS

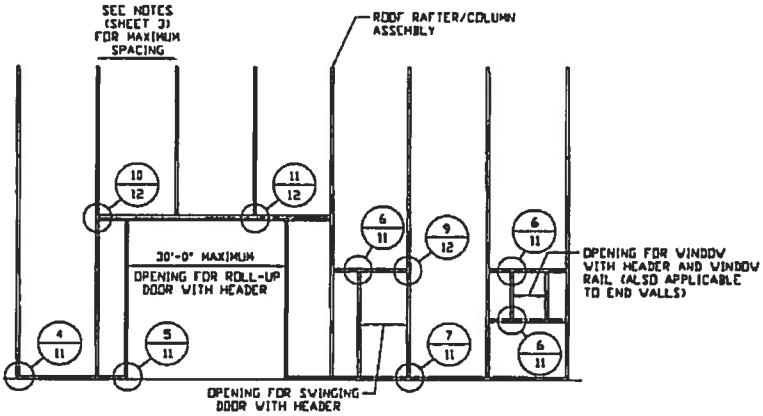

TYPICAL BOW EAVE RAFTER SIDE WALL OPENINGS FRAMING SECTION

SCALE: NTS

MOORE AND ASSOCIATES ENGINEERING AND CONSULTING, INC.	DRAWN BY: LT	R&B METAL STRUCTURES 979 HIGHWAY 42 SOUTH JACKSON, GA 30233 30'x14' ENCLOSED STRUCTURE		
	CHECKED BY: PDH			
	PROJECT MGR: VSM	DATE: 2-10-17	SCALE: NTS	JOB NO: 16182S
	CLIENT: R&B	SHT. 10	DWG. NO: SK-3	REV: 1

THIS DOCUMENT IS THE PROPERTY OF MOORE AND ASSOCIATES ENGINEERING AND CONSULTING. THE UNAUTHORIZED REPRODUCTION, COPYING, OR OTHERWISE USE OF THIS DOCUMENT IS STRICTLY PROHIBITED AND ANY INFRINGEMENT THEREUPON MAY BE SUBJECT TO LEGAL ACTION.

BOX AND BOW EAVE RAFTER WALL OPENING DETAILS

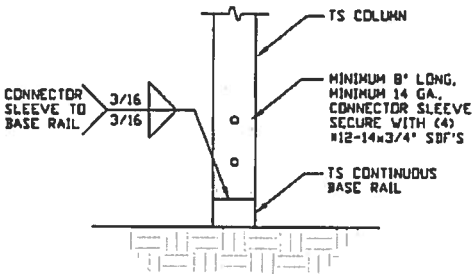

2 RAFTER COLUMN/BASE RAIL CONNECTION DETAIL
SCALE: NTS

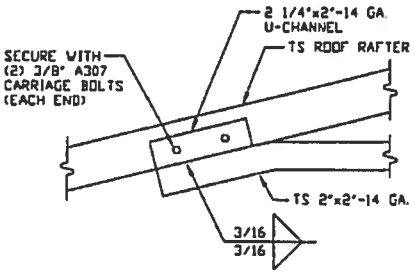

3 8' ROOF RAFTER TIE CONNECTION DETAIL FOR W ≤ 30'
SCALE: NTS

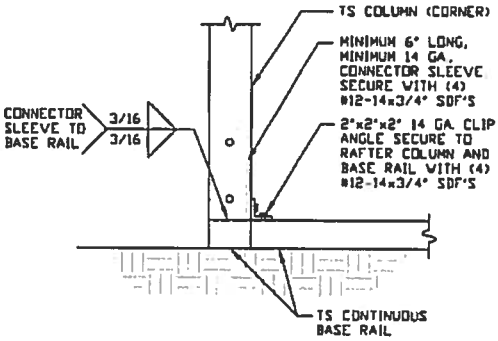

4 END COLUMN/BASE RAIL CONNECTION DETAIL
SCALE: NTS

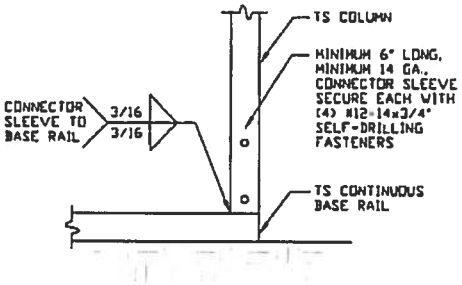

5 COLUMN/BASE RAIL CONNECTION DETAIL
SCALE: NTS

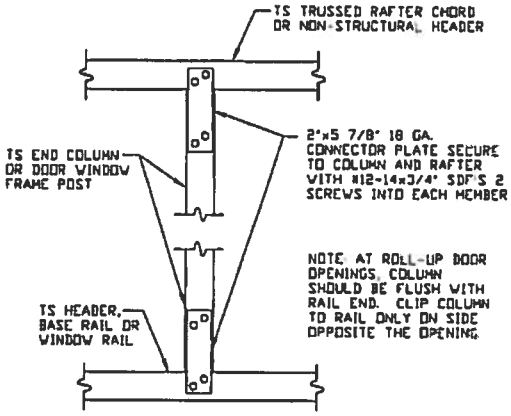

6 COLUMN TO WINDOW RAIL CONNECTION DETAIL
SCALE: NTS

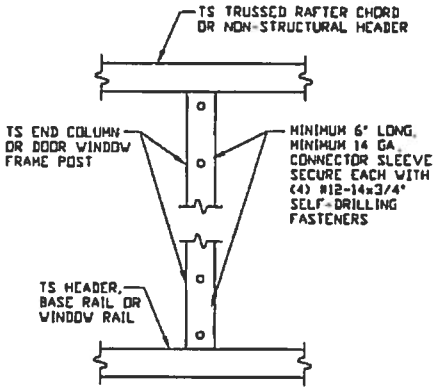

7 COLUMN TO HEADER OR BASE RAIL CONNECTION DETAIL
SCALE: NTS

MOORE AND ASSOCIATES ENGINEERING AND CONSULTING, INC.	DRAWN BY: LT	R&B METAL STRUCTURES 979 HIGHWAY 42 SOUTH JACKSON, GA 30233 30'x14' ENCLOSED STRUCTURE	
	CHECKED BY: PDH		
	PROJECT MGR: VSM	DATE: 2-10-17	SCALE: NTS	JOB NO: 161825
	CLIENT: R&B	SHT. 11	DWG. NO: SK-3	REV: 1

THIS DOCUMENT IS THE PROPERTY OF MOORE AND ASSOCIATES ENGINEERING AND CONSULTING. THE UNAUTHORIZED REPRODUCTION, COPYING, OR OTHERWISE USE OF THIS DOCUMENT IS STRICTLY PROHIBITED AND ANY INFRINGEMENT THEREUPON MAY BE SUBJECT TO LEGAL ACTION.

BOX AND BOW EAVE RAFTER WALL OPENING DETAILS

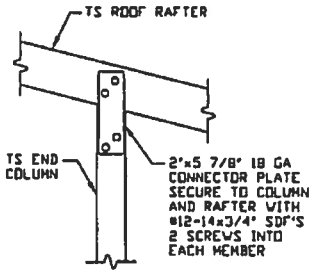

8 RAFTER TO CHORD CONNECTION DETAIL
SCALE: NTS

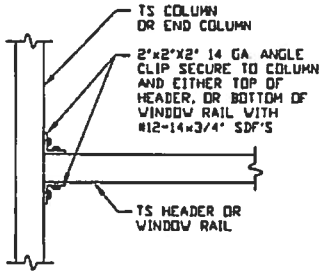

9 COLUMN OR WINDOW RAIL TO POST CONNECTION DETAIL
SCALE: NTS

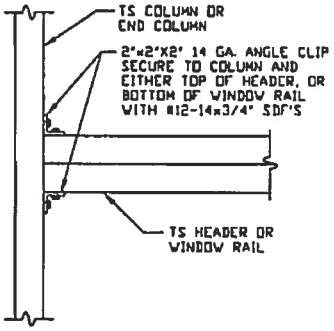

10 LACED HEADER TO COLUMN CONNECTION DETAIL
SCALE: NTS

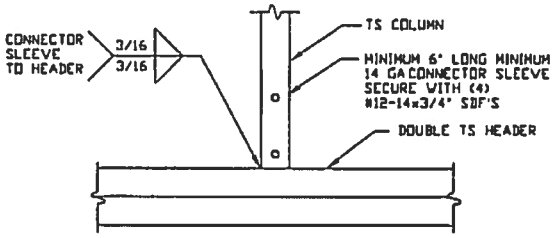

11 COLUMN /LACED HEADER CONNECTION DETAIL
SCALE: NTS

MOORE AND ASSOCIATES ENGINEERING AND CONSULTING, INC.	DRAWN BY: LT	R&B METAL STRUCTURES 979 HIGHWAY 42 SOUTH JACKSON, GA 30233 30'x14' ENCLOSED STRUCTURE		
	CHECKED BY: PDH			
	PROJECT MGR: WSM	DATE: 2-10-17	SCALE: NTS	JOB NO: 161825
	CLIENT: R&B	SHT. 12	DWG. NO: SK-3	REV: 1

THIS DOCUMENT IS THE PROPERTY OF MOORE AND ASSOCIATES ENGINEERING AND CONSULTING. THE UNAUTHORIZED REPRODUCTION, COPYING, OR OTHERWISE USE OF THIS DOCUMENT IS STRICTLY PROHIBITED AND ANY INFRINGEMENT THEREUPON MAY BE SUBJECT TO LEGAL ACTION.

BOX EAVE RAFTER LEAN-TO OPTIONS

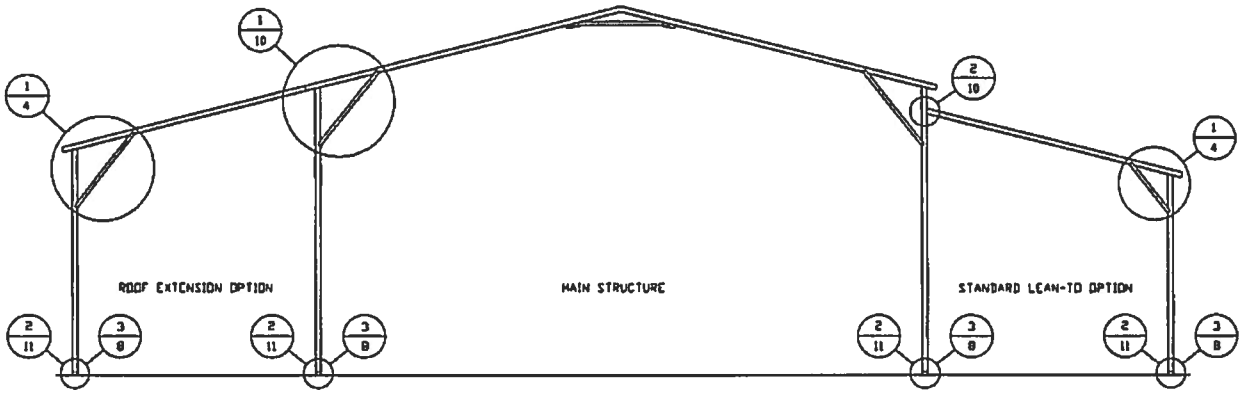

TYPICAL BOX EAVE RAFTER LEAN-TO OPTIONS FRAMING SECTION (BOTH OPTIONS SHOWN)

SCALE: NTS

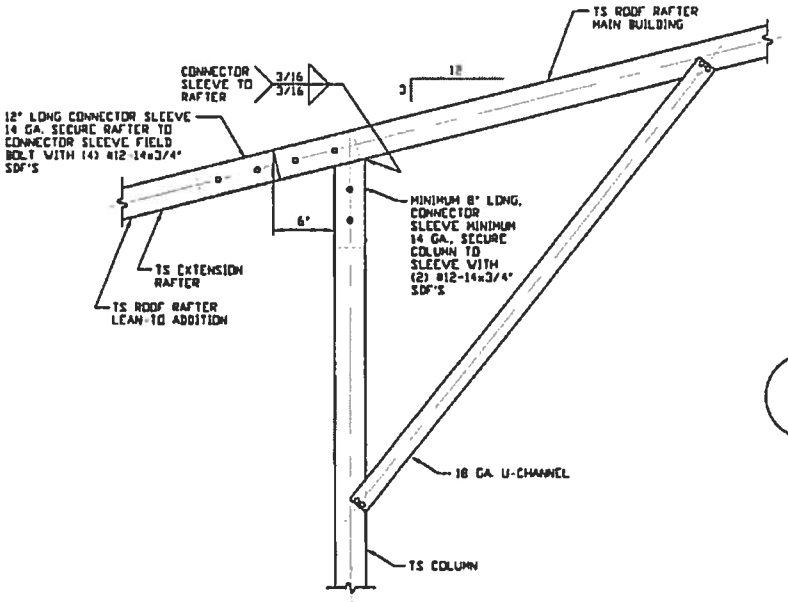

1 SIDE EXTENSION RAFTER/COLUMN DETAIL

SCALE: NTS

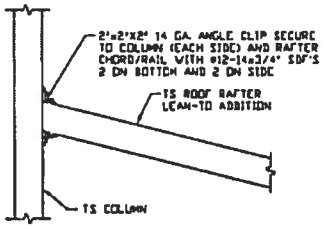

2A LEAN-TO RAFTER TO RAFTER COLUMN CONNECTION DETAIL

SCALE: NTS

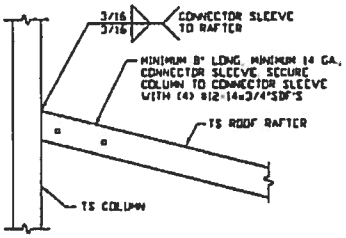

2B LEAN-TO RAFTER TO RAFTER COLUMN CONNECTION DETAIL

SCALE: NTS

MOORE AND ASSOCIATES ENGINEERING AND CONSULTING, INC.	DRAWN BY: LT	R&B METAL STRUCTURES 979 HIGHWAY 42 SOUTH JACKSON, GA 30233 30'x14' ENCLOSED STRUCTURE		
	CHECKED BY: PDH			
	PROJECT MGR: WSH	DATE: 2-10-17	SCALE: NTS	JOB NO: 16182S
	CLIENT: R&B	SHT. 13	DWG. NO: SK-3	REV: 1

THIS DOCUMENT IS THE PROPERTY OF MOORE AND ASSOCIATES ENGINEERING AND CONSULTING. THE UNAUTHORIZED REPRODUCTION, COPYING, OR OTHERWISE USE OF THIS DOCUMENT IS STRICTLY PROHIBITED AND ANY INFRINGEMENT THEREUPON MAY BE SUBJECT TO LEGAL ACTION.

BOW RAFTER LEAN-TO OPTIONS

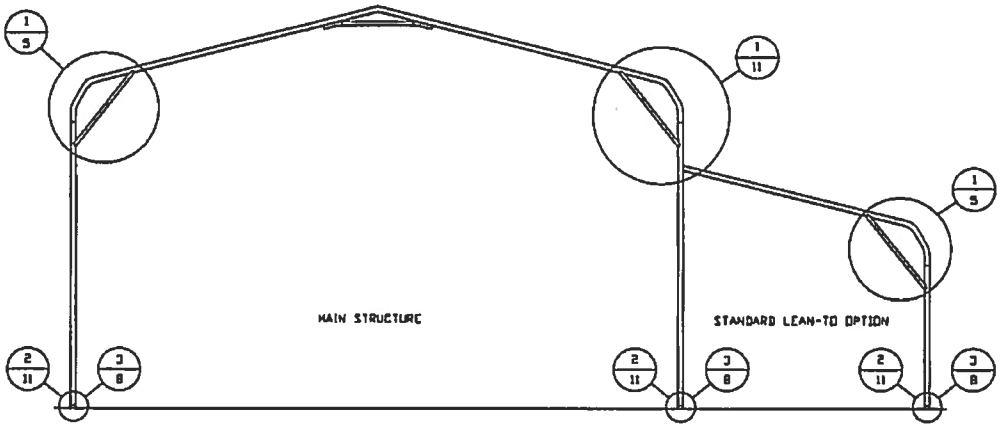

TYPICAL BOW RAFTER LEAN-TO OPTION FRAMING SECTION
SCALE: NTS

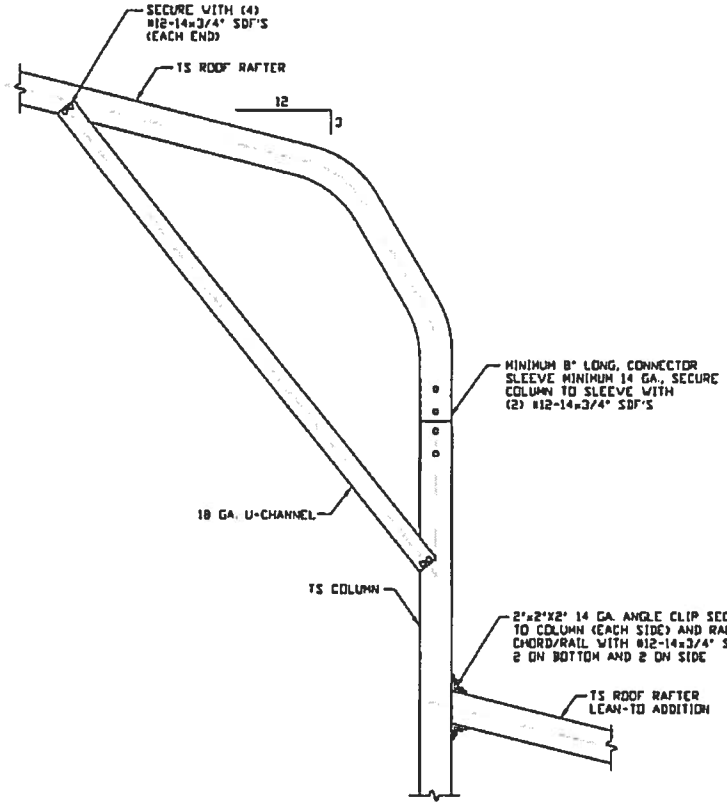

1A LEAN-TO RAFTER TO RAFTER COLUMN CONNECTION DETAIL
SCALE: NTS

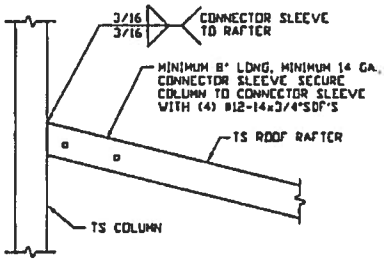

1B LEAN-TO RAFTER TO RAFTER COLUMN CONNECTION DETAIL
SCALE: NTS

MOORE AND ASSOCIATES ENGINEERING AND CONSULTING, INC.	DRAWN BY: LT	R&B METAL STRUCTURES 979 HIGHWAY 42 SOUTH JACKSON, GA 30233 30'x14' ENCLOSED STRUCTURE		
	CHECKED BY: PDH			
THIS DOCUMENT IS THE PROPERTY OF MOORE AND ASSOCIATES ENGINEERING AND CONSULTING. THE UNAUTHORIZED REPRODUCTION, COPYING, OR OTHERWISE USE OF THIS DOCUMENT IS STRICTLY PROHIBITED AND ANY INFRINGEMENT THEREUPON MAY BE SUBJECT TO LEGAL ACTION.	PROJECT MGR: WSH	DATE: 2-10-17	SCALE: NTS	JOB NO: 161825
	CLIENT: R&B	SHT. 14	DWG. NO: SK-3	REV.: 1

BOX EAVE RAFTER VERTICAL ROOF OPTION

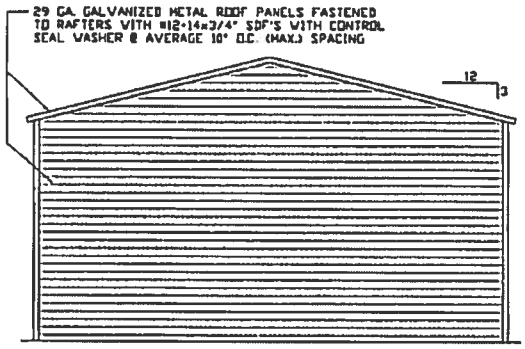

TYPICAL END ELEVATION
VERTICAL ROOF
SCALE: NTS

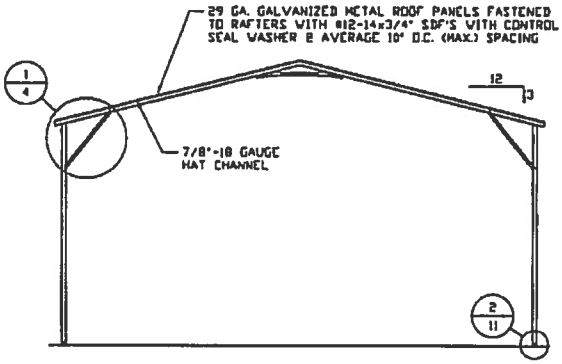

TYPICAL SECTION
VERTICAL ROOF OPTION
SCALE: NTS

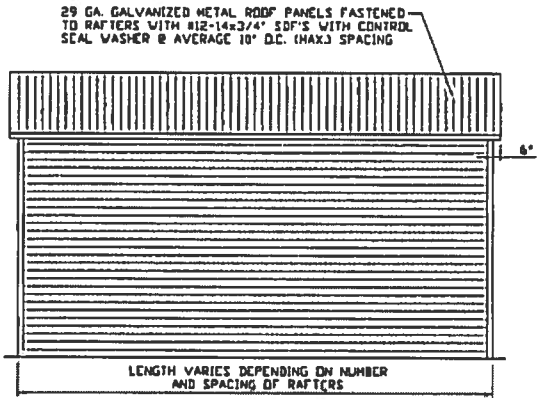

TYPICAL SIDE ELEVATION
VERTICAL ROOF
SCALE: NTS

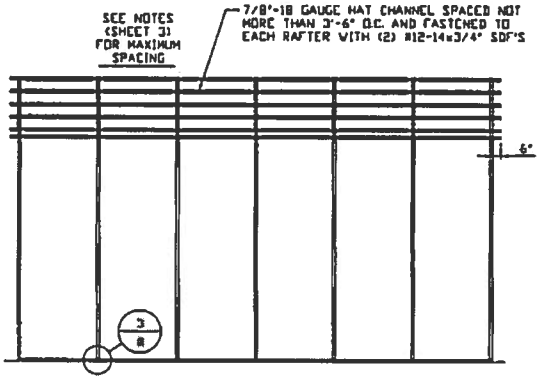

TYPICAL FRAMING SECTION
VERTICAL ROOF OPTION
SCALE: NTS

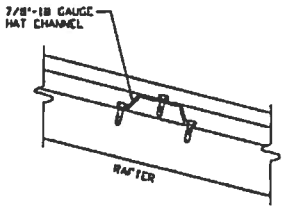

ROOF PANEL ATTACHMENT
(ALTERNATE FOR VERTICAL ROOF PANELS)
SCALE: NTS

MOORE AND ASSOCIATES ENGINEERING AND CONSULTING, INC.	DRAWN BY: LT	R&B METAL STRUCTURES 979 HIGHWAY 42 SOUTH JACKSON, GA 30233 30'x14' ENCLOSED STRUCTURE		
	CHECKED BY: PDH			
	PROJECT MGR: WSM	DATE: 2-10-17	SCALE: NTS	JOB NO: 161825
	CLIENT: R&B	SHT. 15	DWG. NO: SK-3	REV.: 1

THIS DOCUMENT IS THE PROPERTY OF MOORE AND ASSOCIATES ENGINEERING AND CONSULTING. THE UNAUTHORIZED REPRODUCTION, COPYING, OR OTHERWISE USE OF THIS DOCUMENT IS STRICTLY PROHIBITED AND ANY INFRINGEMENT THEREUPON MAY BE SUBJECT TO LEGAL ACTION.

LACED HEADER OPTION

2 1/4 HEADER OPTION

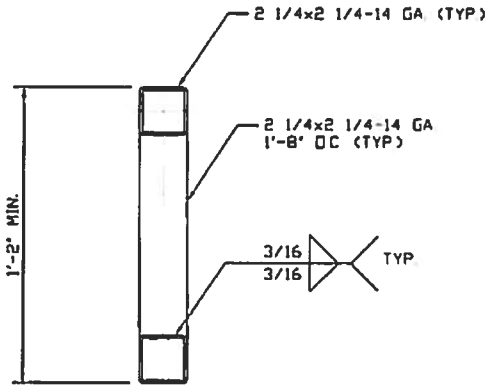

8' < LENGTHS ≤ 22'
SCALE: NTS

2x3 HEADER OPTION

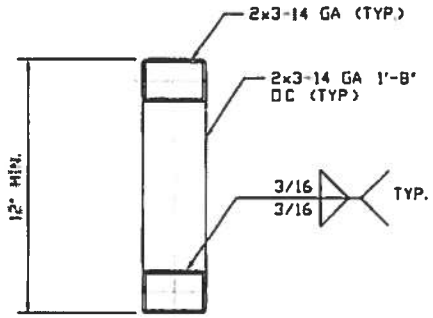

10' < LENGTHS ≤ 22'
SCALE: NTS

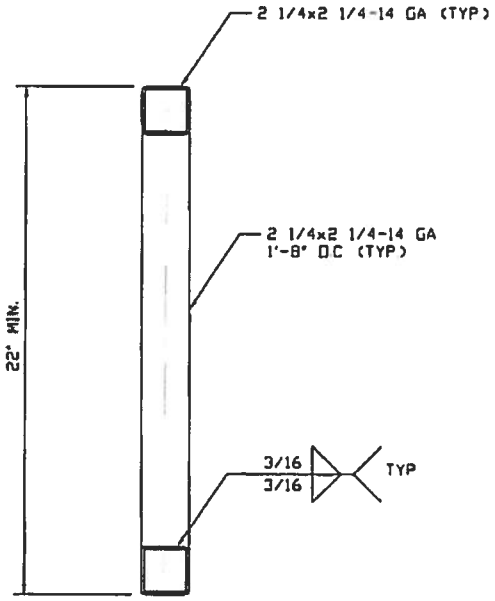

22' < LENGTHS ≤ 30'
SCALE: NTS

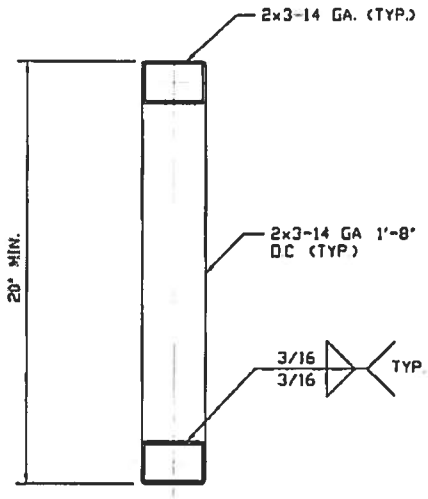

22' < LENGTHS ≤ 30'
SCALE: NTS

MOORE AND ASSOCIATES ENGINEERING AND CONSULTING, INC.	DRAWN BY: LT	R&B METAL STRUCTURES 979 HIGHWAY 42 SOUTH JACKSON, GA 30233 30'x14' ENCLOSED STRUCTURE		
	CHECKED BY: PDK			
	PROJECT MGR: WSM	DATE: 2-10-17	SCALE: NTS	JOB NO: 161825
	CLIENT: R&B	SHT. 16	DWG. NO: SK-3	REV.: 1

THIS DOCUMENT IS THE PROPERTY OF MOORE AND ASSOCIATES ENGINEERING AND CONSULTING. THE UNAUTHORIZED REPRODUCTION, COPYING, OR OTHERWISE USE OF THIS DOCUMENT IS STRICTLY PROHIBITED AND ANY INFRINGEMENT THEREUPON MAY BE SUBJECT TO LEGAL ACTION.

Parcel: 03654-000-000

Search Date: 9/18/2017 at 12:22:01 PM

Taxpayer:	HANES LEROY & SIOBAN	**Legal:** OLMSTEAD SURVEY PB C-79B N1/2 OF LOT 4 BK 5 OR 4536/1229
Mailing:	28101 W NEWBERRY RD NEWBERRY, FL 32669	
Location:	14720 MAIN ST ALACHUA	
Sec-Twn-Rng:	15-08-18	
Property Use:	00100 - Single Family	
Tax Jurisdiction:	Alachua - 1700	
Area:	Downing Addn	
Subdivision:	Olmsteads Survey of Alachua &C-79B	

YeaR	Property Use	Land Assessed Value	Land Just Value	Building Value	Misc Value	Total Just Value	Deferred Value	County Assessed	School Assessed	County Exempt	School Exempt	County Taxable	School Taxable	Total Taxes
2016	Single Family	47500	47500	89800	5200	142500	23730	118770	118770	50000	25000	68770	93770	1911.87
2015	Single Family	47500	47500	93500	5200	146200	28250	117950	117950	50000	25000	67950	92950	1934.03
2014	Single Family	47500	47500	92500	5300	145300	28280	117020	117020	50000	25000	67020	92020	1893.44
2013	Single Family	47500	47500	94700	5700	147900	32600	115300	115300	50000	25000	65300	90300	1850.44
2012	Single Family	47500	47500	96900	6200	150600	37220	113380	113380	50000	25000	63380	88380	1802.27
2011	Single Family	47500	47500	102500	6500	156500	46420	110080	110080	50000	25000	60080	85080	1766.96
2010	Single Family	47500	47500	108600	6800	162900	54440	108460	108460	50000	25000	58460	83460	1714.9
2009	Single Family	47500	47500	117900	6800	172200	67070	105130	105130	50000	25000	55130	80130	1640.6
2008	Single Family	47500	47500	126700	7100	181300	76270	105030	0	50000	0	55030	0	1479.45
2007	Single Family	47500	47500	124300	7500	179300	77320	101980	0	25000	0	76980	0	1772.65

Land

Use	Zoning Type	Zoning Desc	Unit Type	Units
SFR	CBD		Square Feet	19000
			2016 Certified Land Just Value: 47500	**2016 Certified Land Assessed Value: 47500**

Building

Actual Year Built	1920
Effective Year Built	1987
Building Quality	Average
Building Style	Single Family
Building Use	Single Family
Bedrooms:	3
Baths:	2.0
Stories:	1.0
Exterior Wall 1:	Single Siding
Exterior Wall 2:	N/A
Interior Wall 1:	Drywall
Interior Wall 2:	N/A
Floor Cover 1:	Pine/Soft Wood
Floor Cover 2:	N/A
Roof Cover:	Asphalt
Roof Structure:	Gable/Hip
AC:	Central
Heating Type:	Forced Air
Heating System:	Gas
Total Square Feet:	3625
Heated Square Feet:	2482

Area Type	Square Footage
BAS (BASE AREA)	2482
FOP (FINISHED OPEN PORCH)	1143

Footprint_file = 13625_13625.jpg

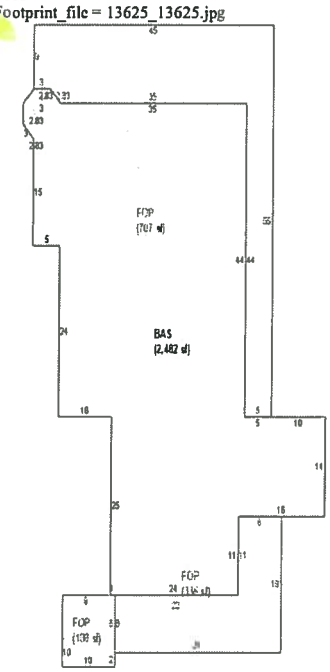

2016 Certified Building Value: 89800

Miscellaneous

Description	Unit Type	Units
0800 - Drive/Walk	SF	3072
2221 - Stg 1	SF	264
0721 - Deck 1	SF	76
0721 - Deck 1	SF	66
0958 - FP 1	UNITS	1
0662 - CP 2	SF	312
		2016 Certified Miscellaneous Value: 5200

6

Sale

Date	Price	Vac/Imp	Qualified	OR Book	OR Page	Instrument
08/03/2017	279000	I	Q	4536	1229	MS
05/28/2001	100	I	U	2362	2649	QD
01/30/1998	60000	I	Q	2151	644	WD
0/01/1979	0	I	U	1255	726	WD

Parcel: 03652-001-000

Search Date: 9/18/2017 at 12:21:34 PM

Taxpayer:	HANES LEROY & SIOBAN	**Legal:** OLMSTEAD SURVEY PB C-79B E 38 FT OF THE N1/2 OF LOT 3 BK 5 OR 4536/1229
Mailing:	28101 W NEWBERRY RD NEWBERRY, FL 32669	
Location:		
Sec-Twn-Rng:	15-08-18	
Property Use:	00000 - Vacant	
Tax Jurisdiction:	Alachua - 1700	
Area:	15-8-18 Alachua	
Subdivision:	Olmsteads Survey of Alachua &C-79B	

YeaR	Property Use	Land Assessed Value	Land Just Value	Building Value	Misc Value	Total Just Value	Deferred Value	County Assessed	School Assessed	County Exempt	School Exempt	County Taxable	School Taxable	Total Taxes
2016	Vacant	7400	7400	0	0	7400	0	7400	7400	0	0	7400	7400	182.61
2015	Vacant	7400	7400	0	0	7400	0	7400	7400	0	0	7400	7400	186.13
2014	Vacant	7400	7400	0	0	7400	0	7400	7400	0	0	7400	7400	183.75
2013	Vacant	7400	7400	0	0	7400	0	7400	7400	0	0	7400	7400	183.7
2012	Vacant	7400	7400	0	0	7400	0	7400	7400	0	0	7400	7400	183.43
2011	Vacant	7400	7400	0	0	7400	0	7400	7400	0	0	7400	7400	187.46
2010	Vacant	7400	7400	0	0	7400	0	7400	7400	0	0	7400	7400	186.09
2009	Vacant	7400	7400	0	0	7400	0	7400	7400	0	0	7400	7400	185.19
2008	Vacant	7400	7400	0	0	7400	0	7400	0	0	0	7400	0	167.66
2007	Vacant	7400	7400	0	0	7400	0	7400	0	0	0	7400	0	168.27

Land

Use	Zoning Type	Zoning Desc	Unit Type	Units
Vacant Residential	CBD		Lot	1
			2016 Certified Land Just Value: 7400	**2016 Certified Land Assessed Value: 7400**

Sale

Date	Price	Vac/Imp	Qualified	OR Book	OR Page	Instrument
08/03/2017	279000	V	Q	4536	1229	MS
02/20/2004	7500	V	Q	2863	173	WD

John Power | TAX COLLECTOR
Serving Alachua County

2016 Roll Details — Real Estate Account At 14720 MAIN ST

Real Estate Account #03654 000 000 | Parcel details | Latest bill | Full bill history | Print this page

2016	2015	2014	2013	...	2002
PAID	PAID	PAID	PAID		PAID

Get Bills by Email

PAID 2016-11-22 $1,835.40
Receipt #16-0029662

Owner: MORSE WALLIS J & ROSANNE T
PO BOX 669
ALACHUA, FL 32616
Situs: 14720 MAIN ST

Account number: 03654 000 000
Alternate Key: 1013469
Millage code: 1700
Millage rate: 24.6764
Escrow company: CHASE (200136)
1 CORELOGIC DR
WESTLAKE, TX 76262

Assessed value: 118,770
School assessed value: 118,770
Unimproved land value: 47,500

Exemptions

HOMESTEAD: 25,000
HOMESTEAD ADD'L 25K: 25,000

Property Appraiser
Location is not guaranteed to be accurate.

2016 Annual bill | View

Ad valorem: $1,895.40
Non-ad valorem: $16.47
Total Discountable: 1911.87
No Discount NAVA: 0.00
Total tax:

Legal description

OLMSTEAD SURVEY PB C-79B N1/2 OF LOT 4 BK 5 OR 2151/0644 & OR 2362/2649

Location

Book, page, item: 2362-2649-
Geo number: 15-08-18-03654000000
Range: 18
Township: 08
Section: 15
Neighborhood: 233214.04
Use code: 00100
Total acres: 0.436

VISA | MasterCard | American Express Cards | DISCOVER network | e-check

© 1997–2017, Grant Street Group. All rights reserved.

Help - Contact us - Terms of service - Tax Collector home

Section 5
HANES CERTIFICATE OF APPROPRIATEESS APPLICATION

1. **Affect Exterior Appearance:**

   This home was built in circa 1920 with an addition added in 2003.
   The house was originally yellow and was painted white for many years until circa 2000 when it was painted pink.

2. **Affect Consistent with Historical, Architectural, or Other Relevant Qualities:**

   Pink is not a historic color for the home. Proposed colors are Castle Beige for the main color and Ultra White trim with Black doors and screen frames.

3. **Negative or Positive Impact on Neighboring Lands of Historical Significance:**

   Painting the house a neutral color is in line with other homes in the historic district. There is no negative impact to the area.

4. **Effect of Denial:**

   We did not know we needed permission to paint our home from pink to white and have already purchased the paint.

5. **Demolition:**

   There is no demolition.

14720 Main St.
1989

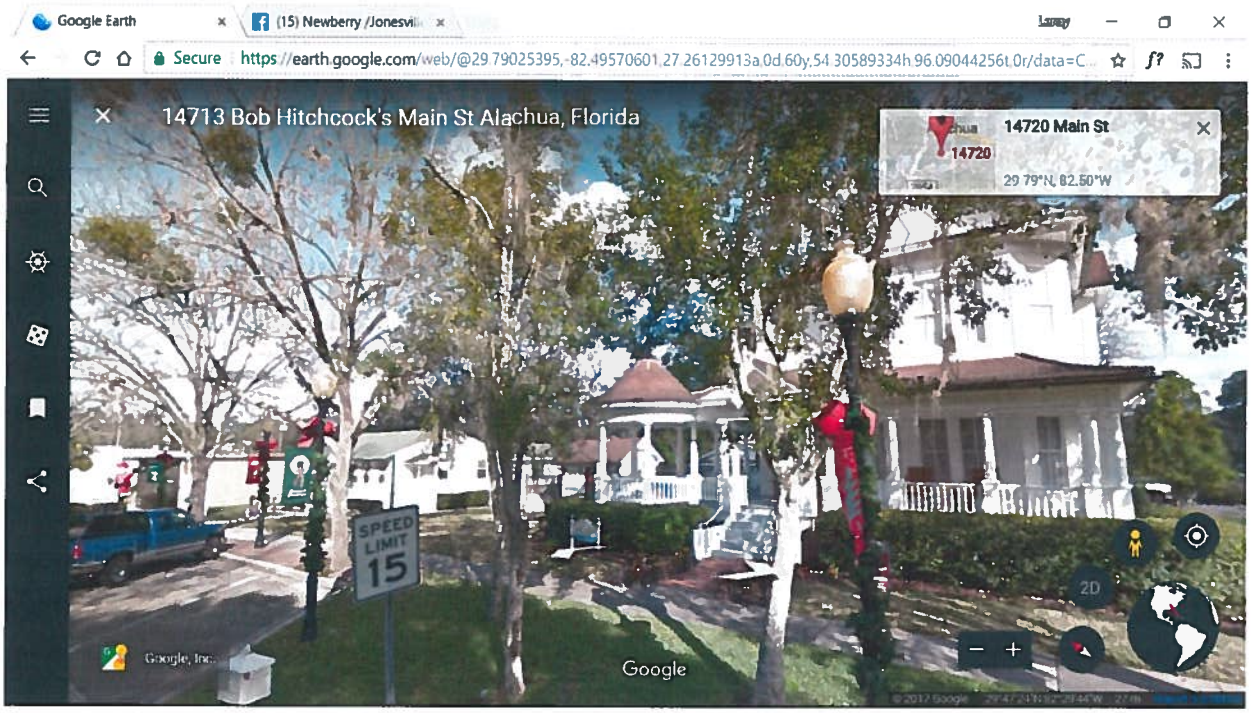
Google Earth
(15) Newberry /Jonesvil
Secure https://earth.google.com/web/@29.79025395,-82.49570601,27.26129913a,0d,60y,54.30589334h,96.09044256t,0r/data=C
14713 Bob Hitchcock's Main St Alachua, Florida
14720 Main St
14720
29.79°N, 82.50°W
SPEED LIMIT 15
2D
Google, Inc.
Google

Google Earth
(15) Newberry /Jonesvil
Secure https://earth.google.com/web/@29.79025395,-82.49570601,27.26129913a,0d,60y,268.2288335h,96.15092141t,0r/data=C
14713 Bob Hitchcock's Main St Alachua, Florida
14720 Main St
14720
29.79°N, 82.50°W
2D
Google, Inc.
Google

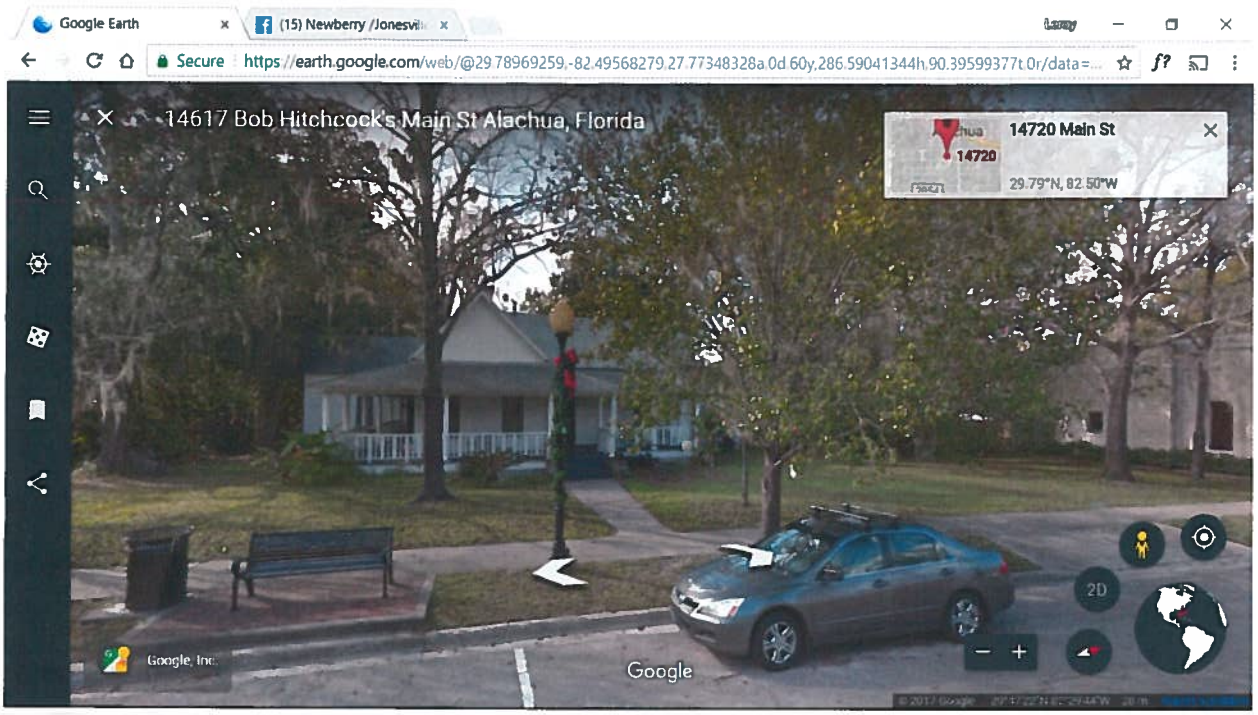
Google Earth
(15) Newberry /Jonesvil
Secure
https://earth.google.com/web/@29.78969259,-82.49568279,27.77348328a,0d,60y,286.59041344h,90.39599377t,0r/data=...
14617 Bob Hitchcock's Main St Alachua, Florida
14720 Main St
14720
29.79°N, 82.50°W
2D
Google, Inc.
Google

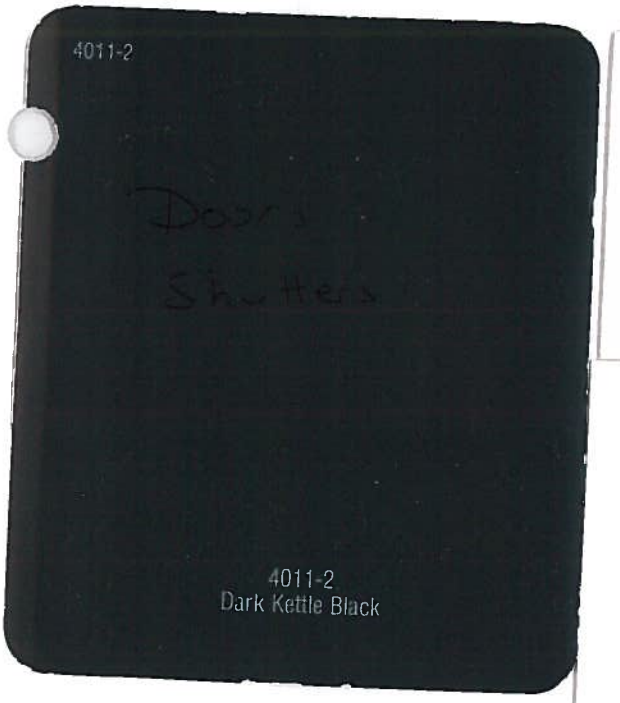
4011-2
Doors
Shutters
4011-2
Dark Kettle Black

N230A
Main
N230A
Castle Beige N230-1

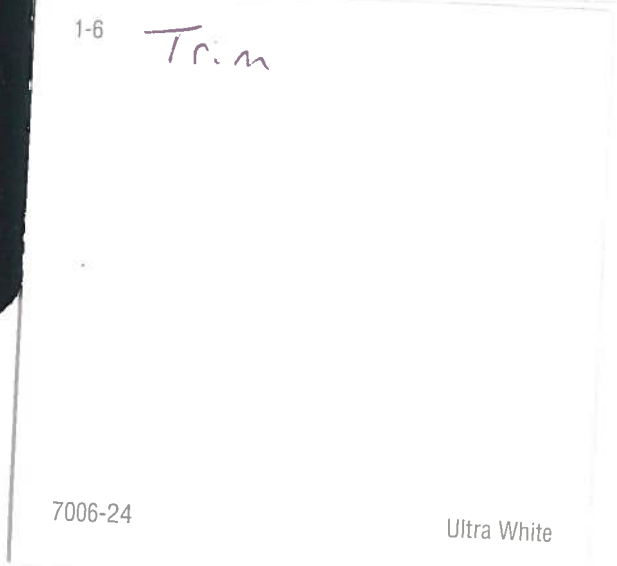
1-6
Trim
7006-24
Ultra White